SHEET 1 OF 1

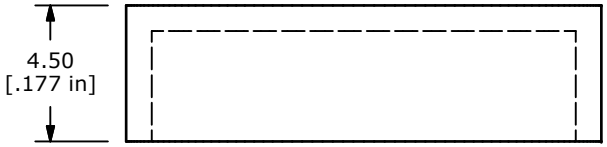

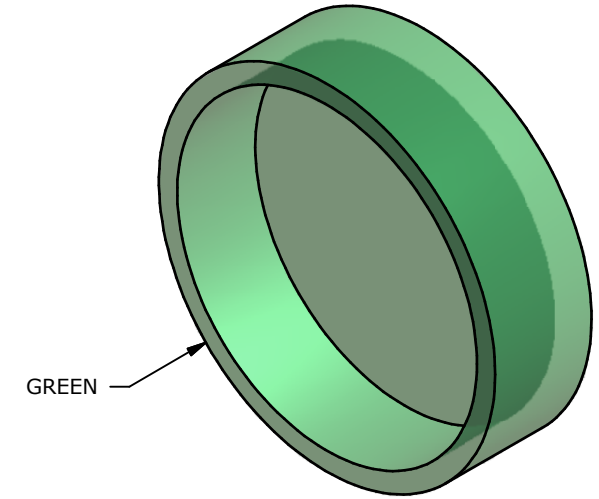

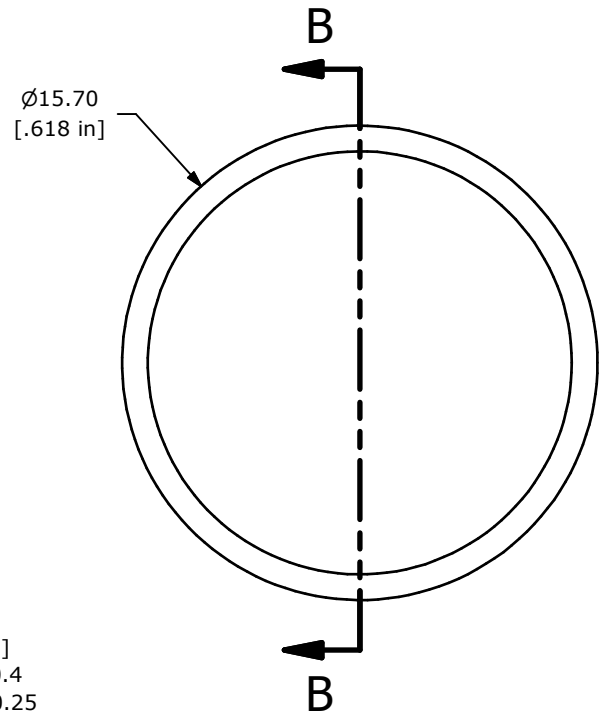

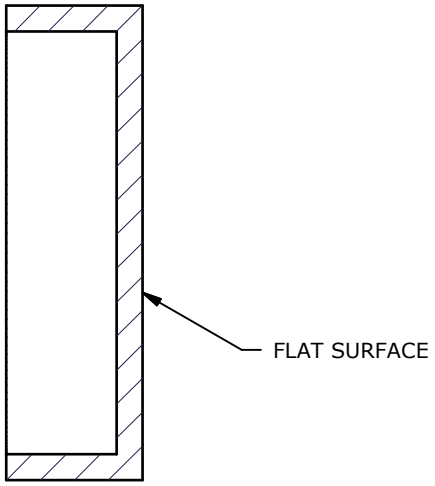

SECTION B-B

NOTES:
1. ALL DIMENSIONS IN MM [INCH]
2. GENERAL TOLERANCE: X.X=±0.4
   X.XX=±0.25
3. DENOTES CRITICAL PARAMETERS
4. 2002/95/EC (ROHS) COMPLIANT

REV	PCR NO	DESCRIPTION	DATE	BY
A	21319	INITIAL RELEASE	12/9/13	EBP

THE INFORMATION CONTAINED IN THIS DOCUMENT IS PROPRIETARY TO E-SWITCH AND IS NOT TO BE COPIED OR TRANSFERRED

E•SWITCH®

TITLE B50-001-12-GRNFLTLENS-R1

SCALE	DATE	DR	DWG	REV
	12/9/2013	EBP	F500112	A