SAW Bandpass Filter F1G61

Features

- RF bandpass filter
- High attenuation
- No matching 50Ω single-ended operation
- Ceramic Surface Mounted Device (SMD) Package (3.0 mm * 3.0 mm)
- RoHS Compliant

Package Dimensions

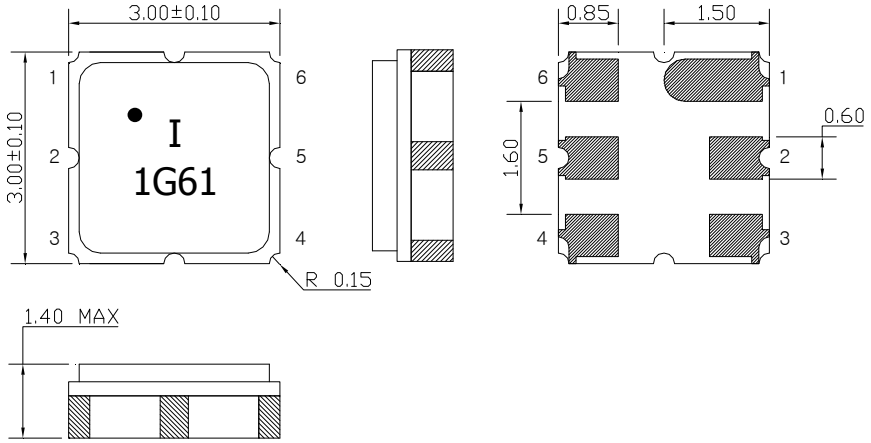

Dimensions shown are nominal in millimeters

Body : Al_2O_3 Ceramic
Lid : Kovar, Ni Plated
Terminations : Au plating 0.3 ~ 1.0 um, Over a 1.27 ~ 8.89 um
Ni Plating

Pin Configuration	
2	Input
5	Output
1, 3, 4, 6	Case ground

Maximum Ratings

Parameter	Unit	Minimum	Typical	Maximum
Operating Temperature Range	℃	-25	25	70
Storage Temperature Range	℃	-30	25	85
Power Handling Capability	dBm	-	10	-

Electrostatics Sensitive Device (**ESD**)

SAW Bandpass Filter F1G61

Specifications

Fc = 1649.5 MHz

Terminating source impedance : 50Ω

Terminating load impedance : 50Ω

	Minimum	Typical	Maximum	Unit
Center Frequency (Fc)	-	1649.5	-	MHz
Insertion Loss (In Fc +/-21 MHz)	-	4.0	5.0	dB
Amplitude Ripple (In Fc +/- 21 MHz)	-	1.2	2.0	dBp-p
VSWR (In Fc +/- 21 MHz)	-	1.7	2.5	
Relative Attenuation				dB
DC ~ 1576.5 MHz	40	49	-	
At 1593 MHz	35	54	-	
1593 ~ 1605 MHz	19	41	-	
At 1751 MHz	25	44	-	
2400 ~ 2500 MHz	40	44.5	-	
Input/Output Impedance		50		Ohms

Notes :

1) All specifications are based on the matching schematic shown below, measured by Agilent Network analyzer and full 2 port calibration.

2) Electrical margin has been built into the design to account for the variations due to temperature drift and manufacturing tolerances

SAW Bandpass Filter F1G61

Matching Schematic

(Actual matching values may vary due to PCB layout and parasitics)

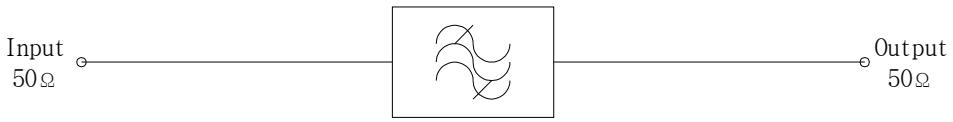

Marking Configuration

● [1)]

I[2)]

1G61[3)]

1) Pad Number 1 Index

2) Manufacturer name

3) Marking Number

* Ink or Laser Marking available

Typical Performance (at 25℃)

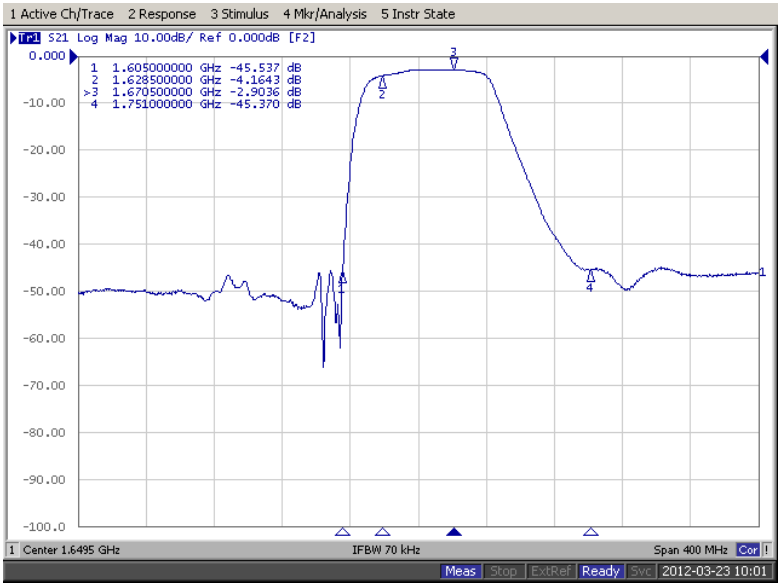

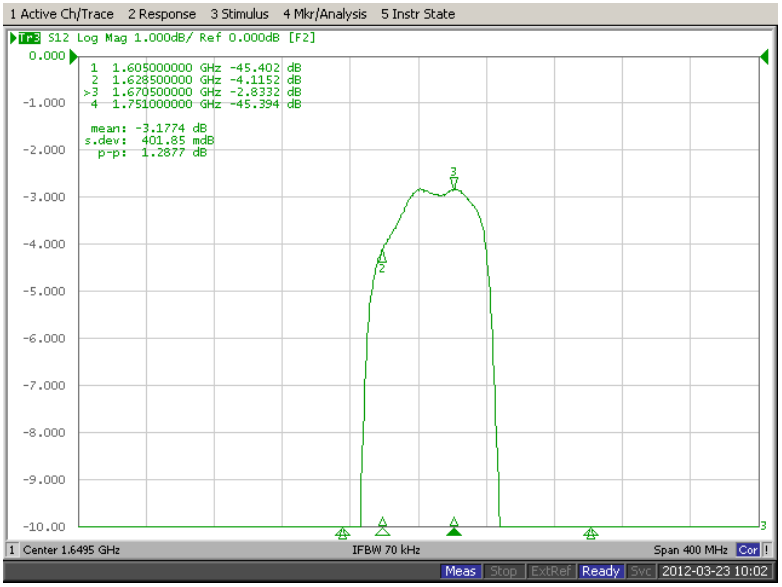

SAW Bandpass Filter F1G61

Input / Output VSWR Charts

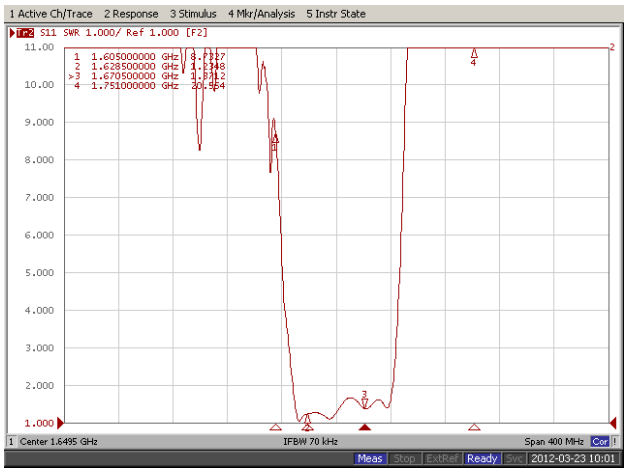

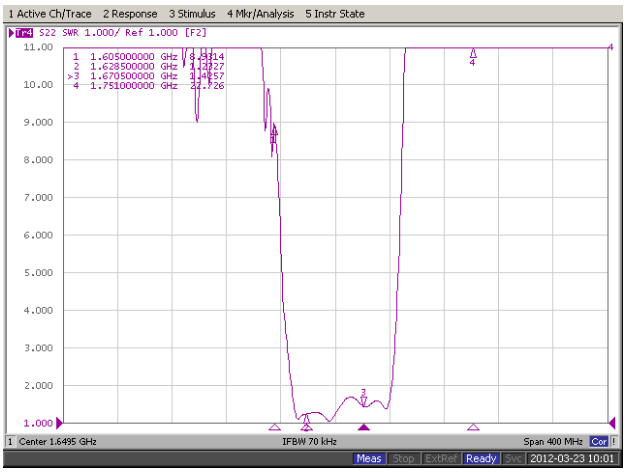

Input / Output Smith Charts

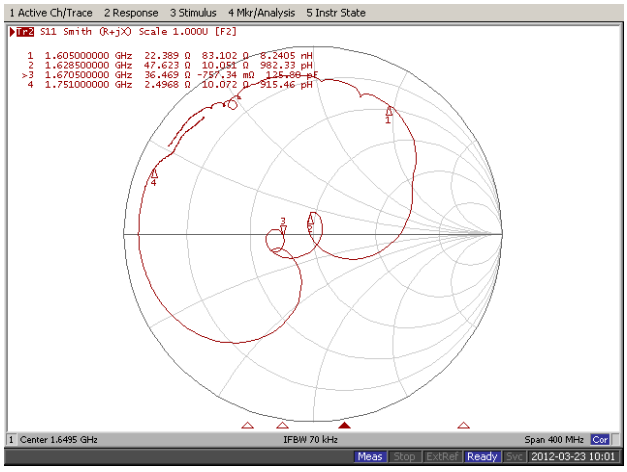

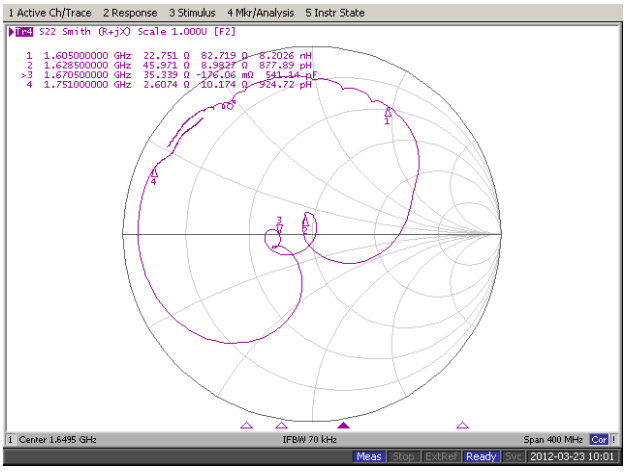

SAW Bandpass Filter F1G61

Packing Specification

1. Reeling Quantity : 3000 pcs / 13” reel (or 1000 pcs / 7” reel)
2. Taping Structure : The tape shall be wound around the reel in the direction shown below.

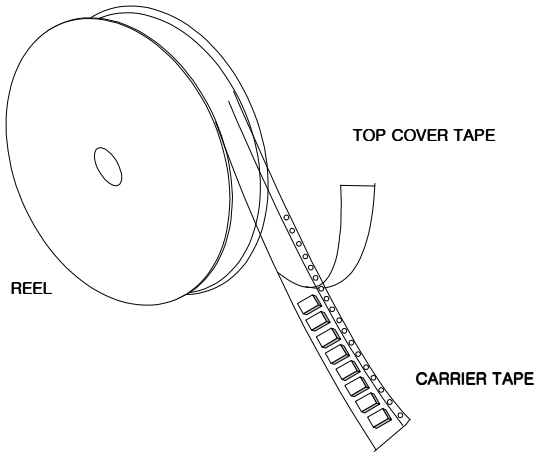

Tape Specification

1. Leader part and vacant position specification

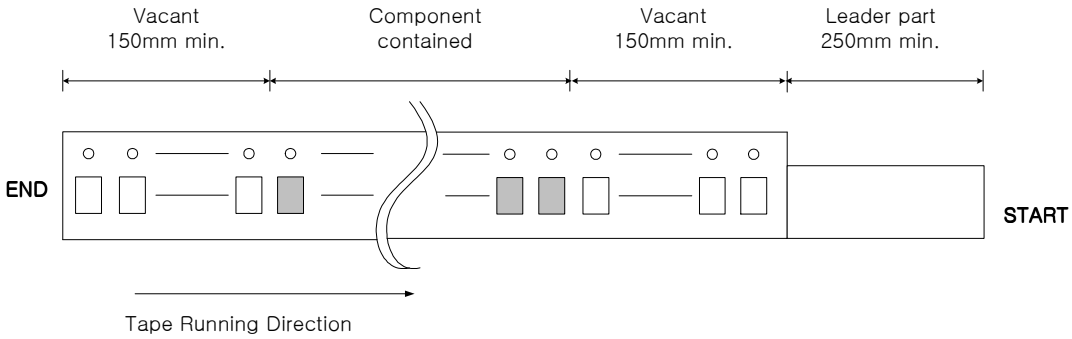

2. Tensile strength of carrier tape

   4.4N/mm width

3. Top cover tape adhesion

   1) pull off angle : 0~15°

   2) speed : 300mm/min

   3) force : 20~70g

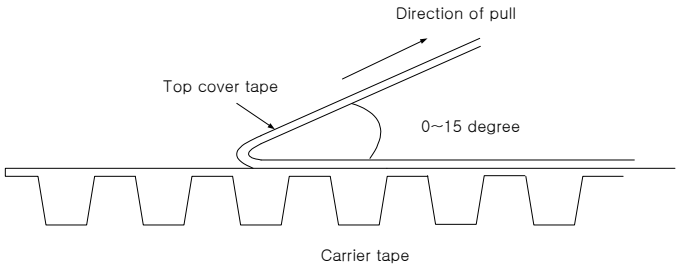

SAW Bandpass Filter F1G61

Carrier Tape Dimensions [unit : mm]

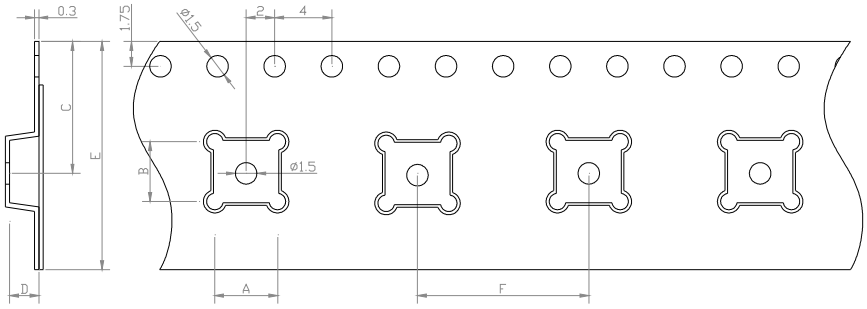

A	3.40 ± 0.1
B	3.40 ± 0.1
C	7.25 ± 0.1
D	1.70 ± 0.1
E	12.00 ± 0.1
F	8.00 ± 0.1

Part Direction

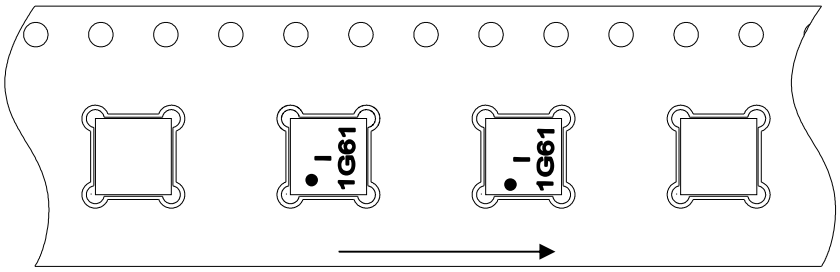

Tape Running Direction

Reel Dimensions [unit : mm]

