PRODUCT DATASHEET
Linnea series
last update 11/4/2017

DETAILS



Product Number	F15523_LINNEA-90
Family	Linnea
Type	Lens
Color	clear
Diameter	285x40 mm
Height	9,5 mm
Style	rectang
Optic Material	PC
Holder Material	
Fastening	clips
Status	production ready
ROHS Comliant	Yes
Date Updated	11/04/2017

OPTICAL PROPERTIES

LED	Viewing Angle	Light Beam	Effi-ciency	cd/lm	Connector
NF2x757D	86+99 deg	Very Wide	-	0.480	-
NF2x757G	sim: 83+99	Very Wide	sim: 83 %	sim: 0.420	-
Duris E 2835	sim: 83+91	Very Wide	sim: 82 %	sim: 0.430	-
LM561B Plus	88+100 deg	Very Wide	83 %	0.390	-

Ledil Oy
Salorankatu 10
24240 SALO, Finland

http://www.ledil.com
email: ledil@ledil.com
FAX: +358-2-733 8001

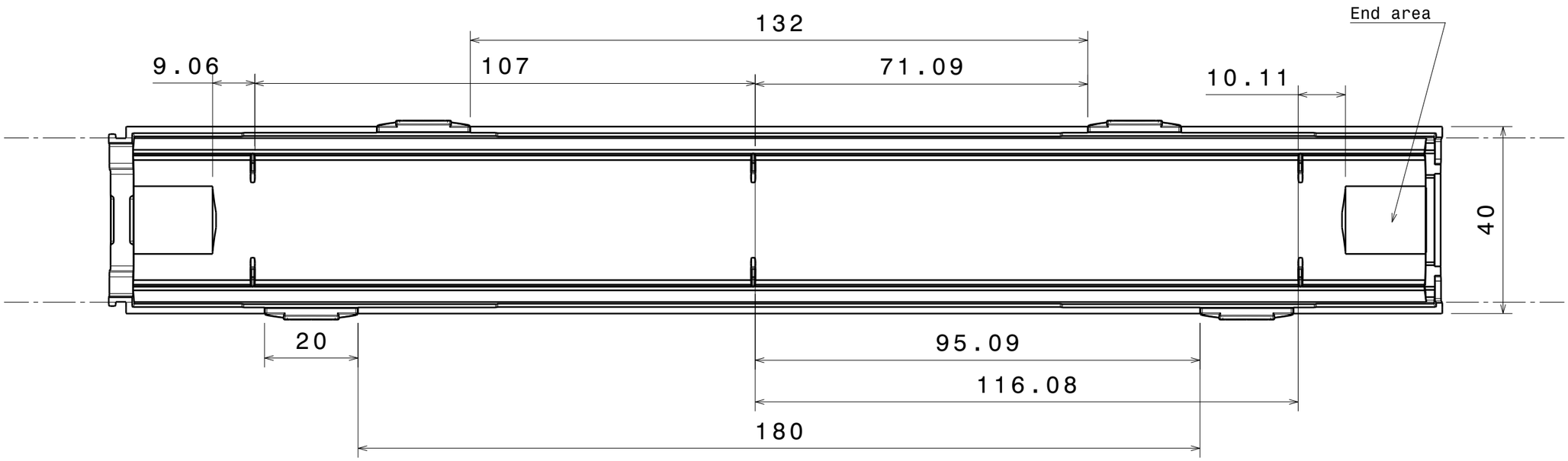

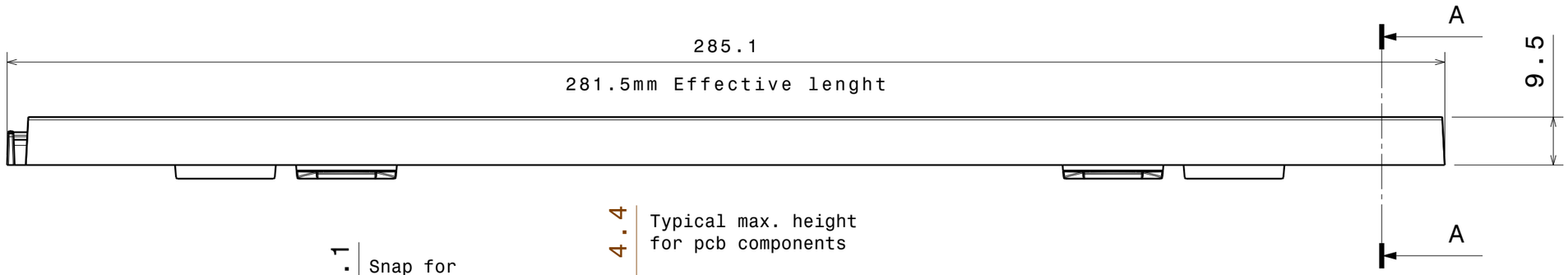

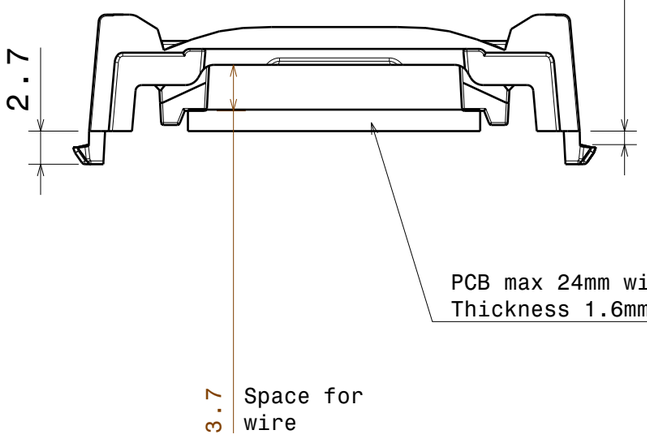

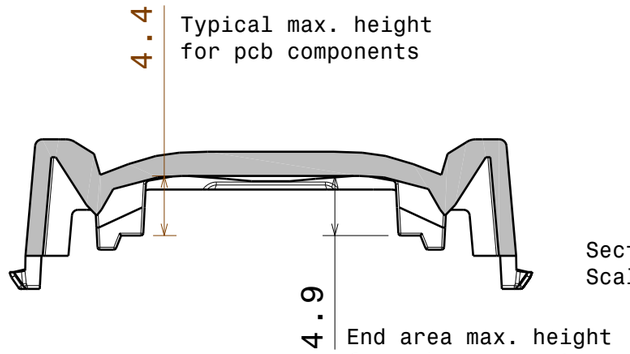

Section view A-A
Scale: 2:1

INDEX	PART NO	DESCRIPTION	MATERIAL	COLOUR
1	F15523	LINNEA-90	PC	Clear

Tolerances if not otherwise shown
According to DIN ISO 2768-1
Linear measures:
Up to 30mm class M, otherwise class C.
According to DIN ISO 2768-2
Form and position: class L

FIRST ANGLE PROJECTION:

This drawing is the property of LEDiL Oy. It may not be reproduced, copied or communicated without a written agreement with LEDiL Oy.

LEDiL
Ledil Oy
Salorankatu 10
FIN 24240 SALO
Finland

DRAWING TITLE
F15523_LINNEA-90

SIZE	PART NUMBER			
A3	F15523			
SCALE 1:1	WEIGHT 33,4g		SHEET 1/2	

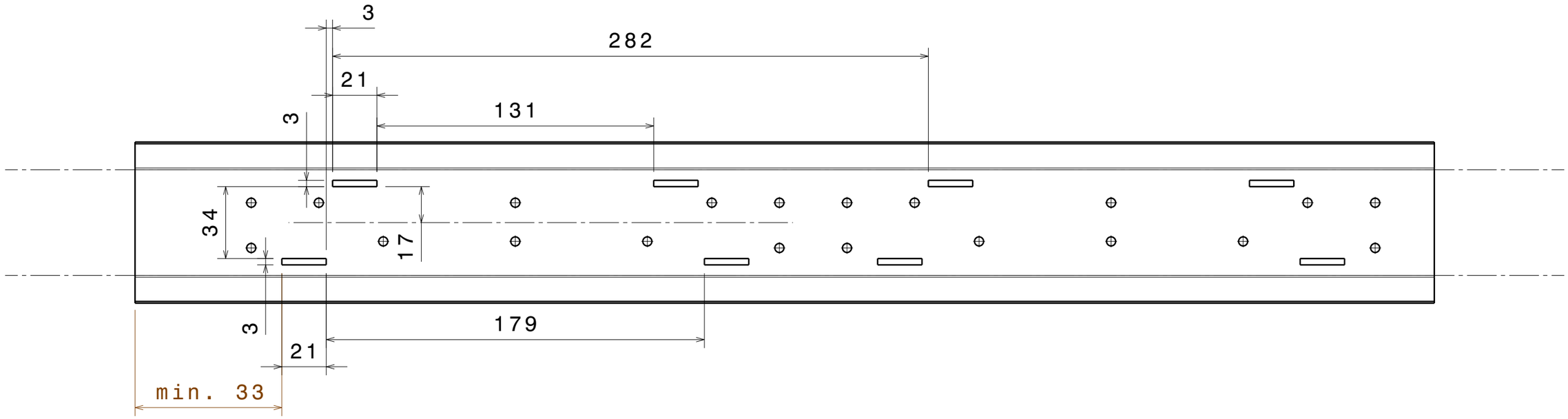

	LEDiL Ledil Oy Salorankatu 10 FIN 24240 SALO Finland
FIRST ANGLE PROJECTION:	DRAWING TITLE LINNEA SHEETMETAL CUT OUT
This drawing is the property of LEDiL Oy. It may not be reproduced, copied or communicated without a written agreement with LEDiL Oy.	SIZE A3 · PART NUMBER -
	SCALE 1:2 · WEIGHT · SHEET 2/2

Luminaire: Ledil Oy F15523_LINNEA-90_(NF2W757GR-V1)_SIMULATED
Lamps: 1 x Nichia NF2W757GR-V1

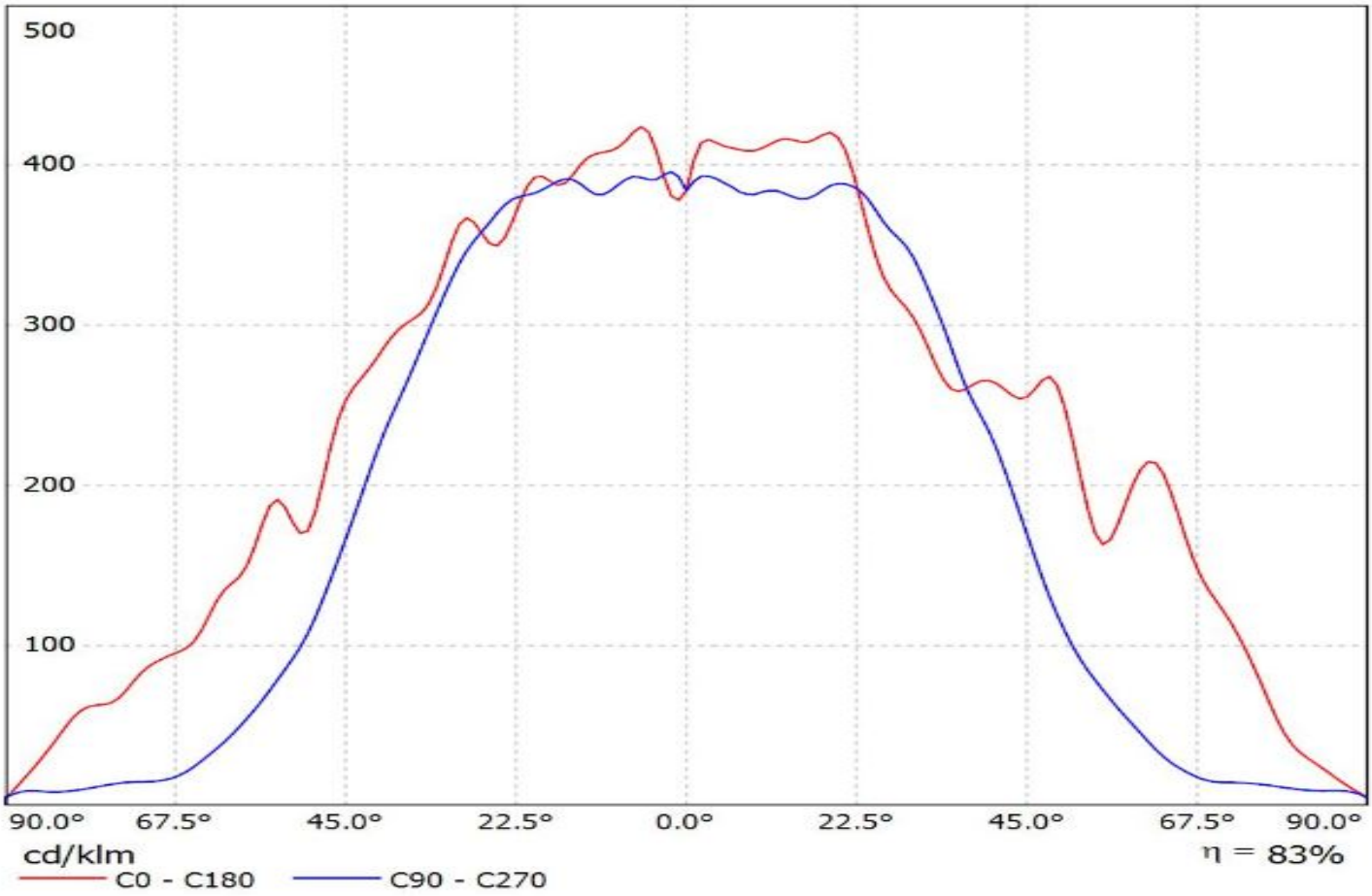

Luminaire: Ledil Oy F15523_LINNEA-90_(Duris_E_2835)_SIMULATED
Lamps: 1 x Osram Duris E 2835 - GW JTLRS1.EM

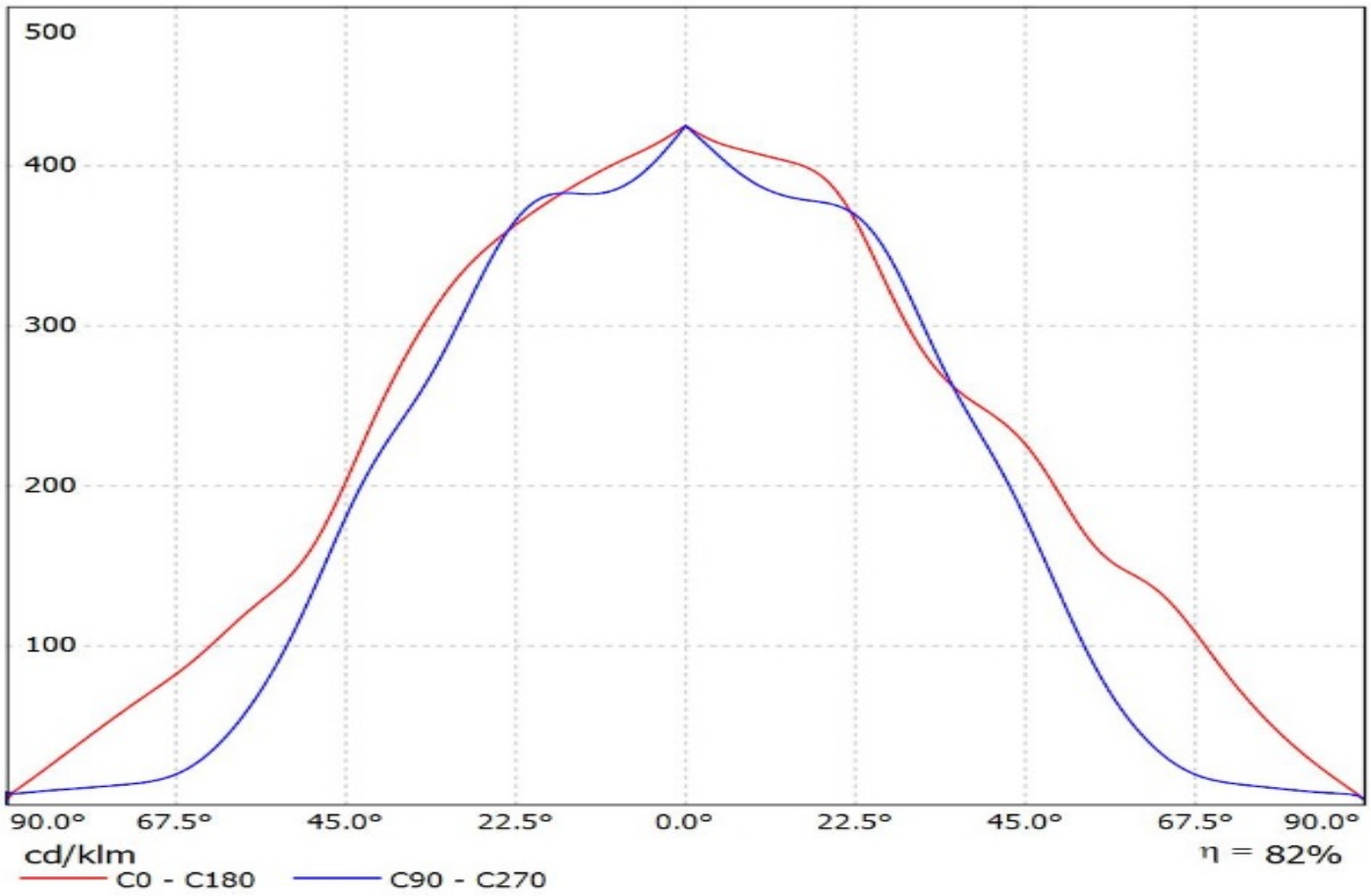

Luminaire: Ledil F15523_LINNEA-90_(LM561B+)
Lamps: 1 x Samsung_LM561B+_1417.99lm@250mA_P=9.152W_I=0.25A

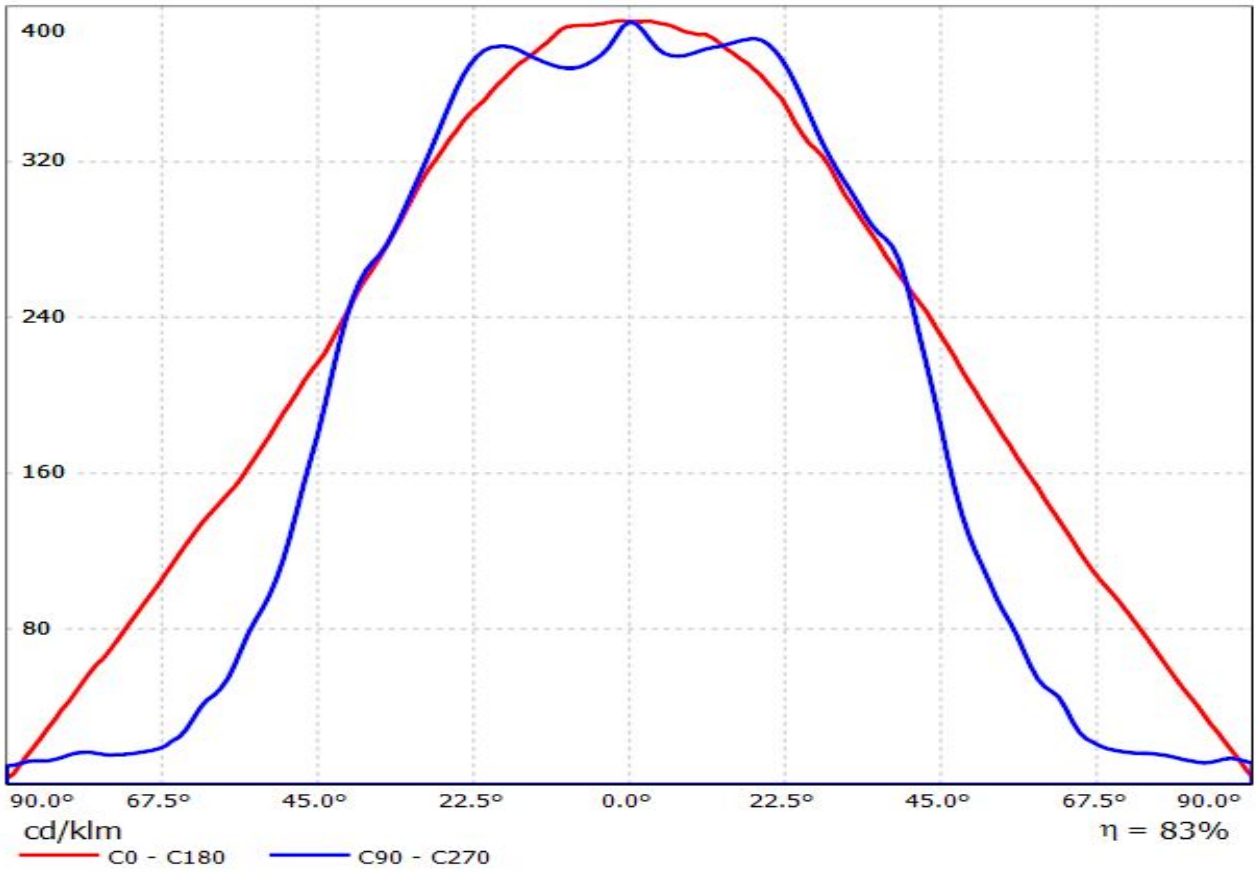

Luminaire: Ledil Oy F15523_LINNEA-90_(NF2W757GR-V1)_SIMULATED
Lamps: 1 x Nichia NF2W757GR-V1

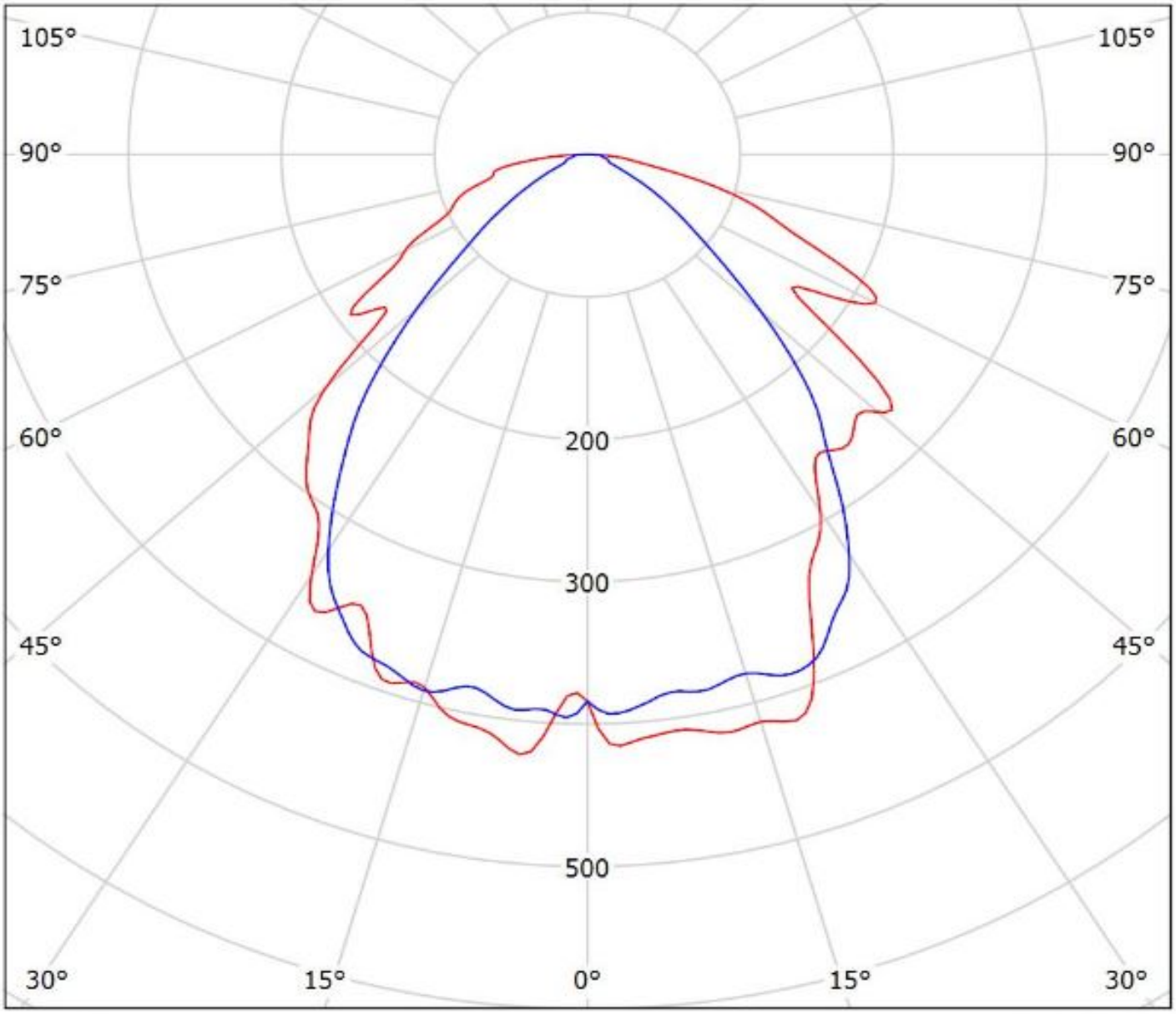

Luminaire: Ledil Oy F15523_LINNEA-90_(Duris_E_2835)_SIMULATED
Lamps: 1 x Osram Duris E 2835 - GW JTLRS1.EM

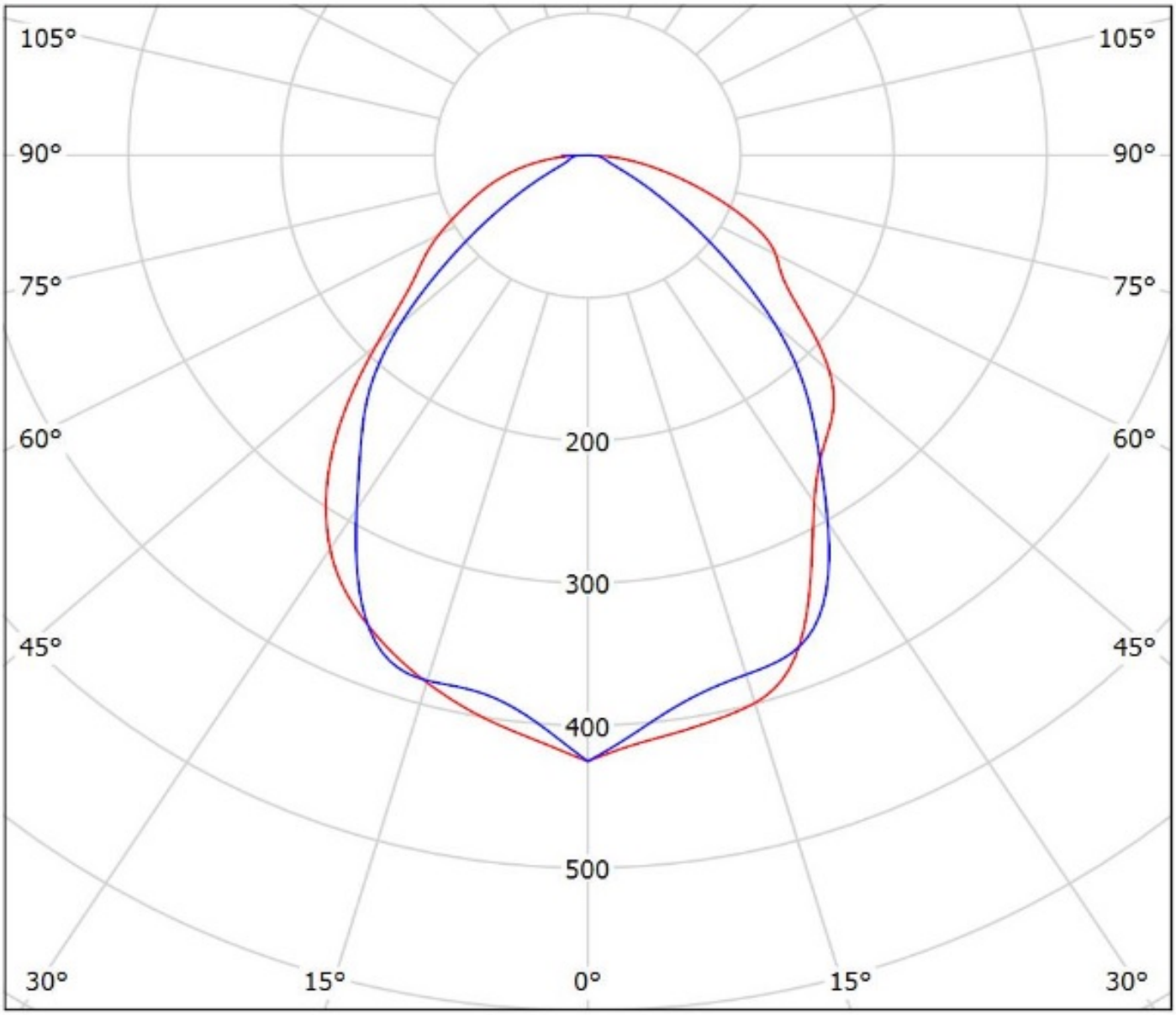

Luminaire: Ledil F15523_LINNEA-90_(LM561B+)
Lamps: 1 x Samsung_LM561B+_1417.99lm@250mA_P=9.152W_I=0.25A

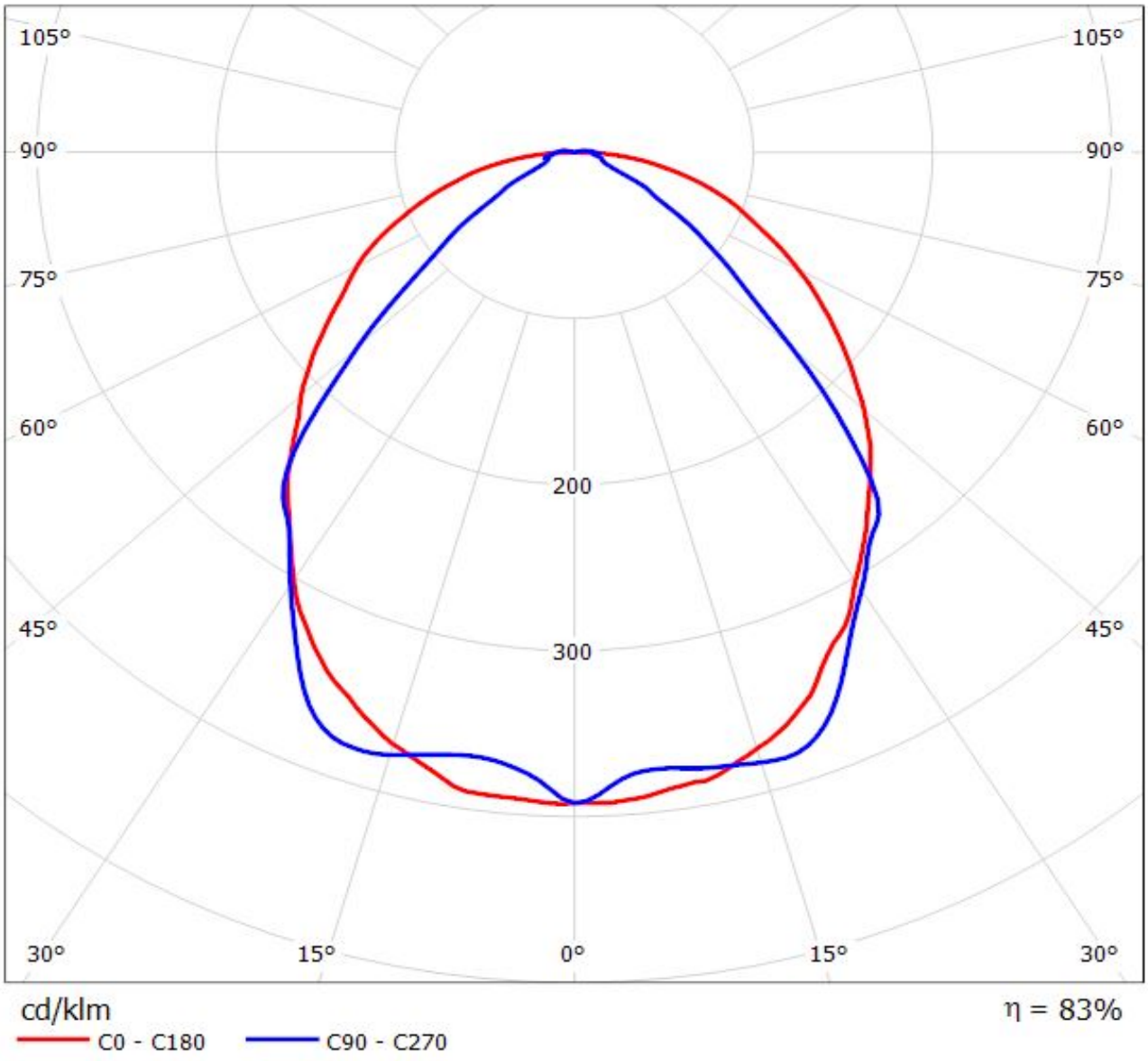

NOTE: The typical divergence will be changed by different color, chip size and chip position tolerance. The typical total divergence is the full angle measured where the luminous intensity is half of the peak value.