Vincotech

F112R6A035SC

target datasheet

flowPACK 1 — **1200V/35A**

Features

- Inverter, blocking diodes
- Very compact housing, easy to route
- IGBT4 technology

flow1 housing



Target Applications

- Power Regeneration

Schematic

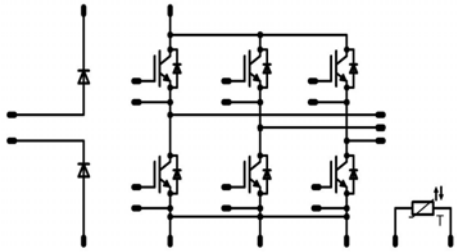

Types

- 10-F112R6A035SC-M439E08
- 10-F112R6A035SC01-M439E18

Maximum Ratings

T_j=25°C, unless otherwise specified

Parameter	Symbol	Condition		Value	Unit
Blocking Diode					
Repetitive peak reverse voltage	V_{RRM}			1600	V
DC forward current	I_{FAV}	T_j=$T_j$max	T_h=80°C	50	A
Surge forward current	I_{FSM}	t_p=10ms	T_j=25°C	700	A
I2t-value	I^2t			2450	A^2s
Power dissipation per Diode	P_{tot}	T_j=$T_j$max	T_h=80°C	95	W
Maximum Junction Temperature	$T_j$max			150	°C
Inverter Transistor					
Collector-emitter break down voltage	V_{CE}			1200	V
DC collector current	I_C	T_j=$T_j$max	T_h=80°C	33	A
Repetitive peak collector current	I_{Cpulse}	t_p limited by $T_j$max		105	A
Turn off safe operating area		VCE ≤ 1200V, Tj ≤ Top max		70	A
Power dissipation per IGBT	P_{tot}	T_j=$T_j$max	T_h=80°C	79	W
Gate-emitter peak voltage	V_{GE}			±20	V
Short circuit ratings	t_{SC} V_{CC}	T_j≤150°C V_{GE}=15V		10 800	µs V
Maximum Junction Temperature	$T_j$max			175	°C

Maximum Ratings

T_j=25°C, unless otherwise specified

Parameter	Symbol	Condition	Value	Unit
Inverter Diode				
Peak Repetitive Reverse Voltage	V_{RRM}	T_j=25°C	1200	V
DC forward current	I_F	T_j=$T_j$max T_h=80°C	18	A
Repetitive peak forward current	I_{FRM}	t_p limited by $T_j$max	30	A
Power dissipation per Diode	P_{tot}	T_j=$T_j$max T_h=80°C	38	W
Maximum Junction Temperature	$T_j$max		175	°C
Thermal Properties				
Storage temperature	T_{stg}		-40…+125	°C
Operation temperature under switching condition	T_{op}		-40…+(Tjmax - 25)	°C
Insulation Properties				
Insulation voltage	V_{is}	t=2s DC voltage	4000	V
Creepage distance			min 12.7	mm
Clearance			min 12.7	mm
Comparative tracking index	CTI		>200	

Characteristic Values

Parameter	Symbol	Conditions					Value			Unit
			V_{GE} [V] or V_{GS} [V]	V_r [V] or V_{CE} [V] or V_{DS} [V]	I_C [A] or I_F [A] or I_D [A]	T_j	Min	Typ	Max	
Blocking Diode										
Forward voltage	V_F				50	Tj=25°C Tj=125°C		1.11 1.04	1.7	V
Threshold voltage (for power loss calc. only)	V_{to}				50	Tj=25°C Tj=125°C		0.91 0.78		V
Slope resistance (for power loss calc. only)	r_t				50	Tj=25°C Tj=125°C		4 5		mΩ
Reverse current	I_r			1600		Tj=25°C Tj=125°C			0.05 1.1	mA
Thermal resistance chip to heatsink per chip	R_{thJH}	Thermal grease thickness≤50um λ = 1 W/mK						0.74		K/W
Thermal resistance chip to heatsink per chip	R_{thJC}							0.49		
Inverter Transistor										
Gate emitter threshold voltage	$V_{GE(th)}$	$V_{CE}=V_{GE}$			0.0012	Tj=25°C Tj=150°C	5	5.8	6.5	V
Collector-emitter saturation voltage	$V_{CE(sat)}$		15		35	Tj=25°C Tj=150°C	1.6	1.95 2.39	2.3	V
Collector-emitter cut-off current incl. Diode	I_{CES}		0	1200		Tj=25°C Tj=150°C			0.01	mA
Gate-emitter leakage current	I_{GES}		20	0		Tj=25°C Tj=150°C			200	nA
Integrated Gate resistor	R_{gint}							none		Ω
Turn-on delay time	$t_{d(on)}$	Rgoff=8 Ω Rgon=8 Ω	±15	600	35	Tj=25°C Tj=150°C		92 91.6		ns
Rise time	t_r					Tj=25°C Tj=150°C		18 23.4		
Turn-off delay time	$t_{d(off)}$					Tj=25°C Tj=150°C		213 274		
Fall time	t_f					Tj=25°C Tj=150°C		75.3 105		
Turn-on energy loss per pulse	E_{on}					Tj=25°C Tj=150°C		1.62 2.49		mWs
Turn-off energy loss per pulse	E_{off}					Tj=25°C Tj=150°C		1.81 2.82		
Input capacitance	C_{ies}	f=1MHz	0	25		Tj=25°C		1950		pF
Output capacitance	C_{oss}							155		
Reverse transfer capacitance	C_{rss}							115		
Gate charge	Q_{Gate}		±15		35	Tj=25°C		270		nC
Thermal resistance chip to heatsink per chip	R_{thJH}	Thermal grease thickness≤50um λ = 1 W/mK						1.2		K/W
Thermal resistance chip to case per chip	R_{thJC}							N/A		
Inverter Diode										
Diode forward voltage	V_F				15	Tj=25°C Tj=150°C	1.35	1.90 1.91	2.35	V
Peak reverse recovery current	I_{RRM}	Rgon=8 Ω	±15	600	15	Tj=25°C Tj=150°C		16.06		A
Reverse recovery time	t_{rr}					Tj=25°C Tj=150°C		433.4		ns
Reverse recovered charge	Q_{rr}					Tj=25°C Tj=150°C		2.75		µC
Peak rate of fall of recovery current	di(rec)max /dt					Tj=25°C Tj=150°C		109		A/µs
Reverse recovered energy	Erec					Tj=25°C Tj=150°C		1.16		mWs
Thermal resistance chip to heatsink per chip	R_{thJH}	Thermal grease thickness≤50um λ = 1 W/mK						2.52		K/W
Thermal resistance chip to case per chip	R_{thJC}							tbd.		

Characteristic Values

Parameter	Symbol	Conditions					Value			Unit
			V_{GE} [V] or V_{GS} [V]	V_r [V] or V_{CE} [V] or V_{DS} [V]	I_C [A] or I_F [A] or I_D [A]	T_j	Min	Typ	Max	
Thermistor										
Rated resistance	R					Tj=25°C		22000		Ω
Deviation of R100	ΔR/R	R100=1670 Ω				Tc=100°C	-5		5	%
Power dissipation	P					Tc=100°C		200		mW
Power dissipation constant						Tj=25°C		2		mW/K
B-value	$B_{(25/50)}$	Tol. ±3%				Tj=25°C		3950		K
B-value	$B_{(25/100)}$	Tol. ±3%				Tj=25°C		3996		K
Vincotech NTC Reference						Tj=25°C			B	
Module Properties										
Thermal resistance, case to heatsink	R_{thCH}							tbd.		K/W
Module stray inductance	L_{sCE}							5		nH
Chip module lead resistance, terminals -chip	$R_{cc'1+EE'}$							tbd.		mΩ
Mounting torque	M						3.8	4	4.2	Nm
Terminal connection torque	M						6.7	7	7.4	Nm
Weight	G							tbd.		g

Ordering Code and Marking - Outline - Pinout

Ordering Code & Marking

Version	Ordering Code	in DataMatrix as	in packaging barcode as
12mm housing	10-F112R6A035SC-M439E08	M439-E08	M439-E08
12mm housing, without thermistor	10-F112R6A035SC01-M439E18	M439-E18	M439-E18

Outline

Pin table		
Pin	X	Y
1	47,7	0
2	44,8	0
3	37,8	0
4	37,8	2,8
5	35	0
6	35	2,8
7	28	0
8	25,2	0
9	22,4	0
10	19,6	0
11	16,8	0
12	14	0
13	11,2	0
14	8,4	0
15	5,6	0
16	2,8	0
17	0	0
18	0	28,5
19	2,8	28,5
20	7,5	28,5
21	14,5	28,5
22	17,3	28,5
23	22	28,5
24	29	28,5
25	31,8	28,5
26	36,5	28,5
27	43,5	28,5
28	52,55	25

Pin table		
Pin	X	Y
29	52,55	16,9
30	52,55	8,6

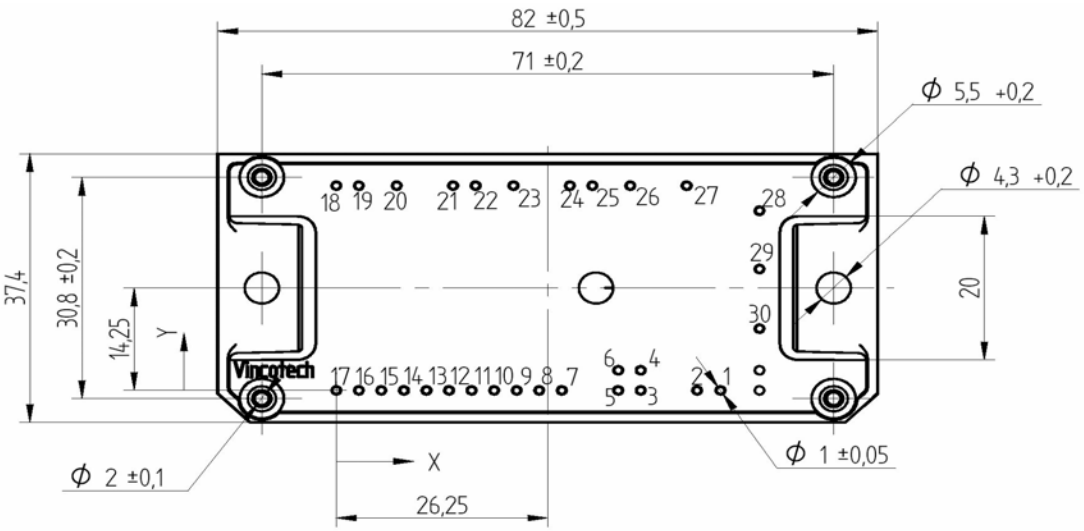

Pinout

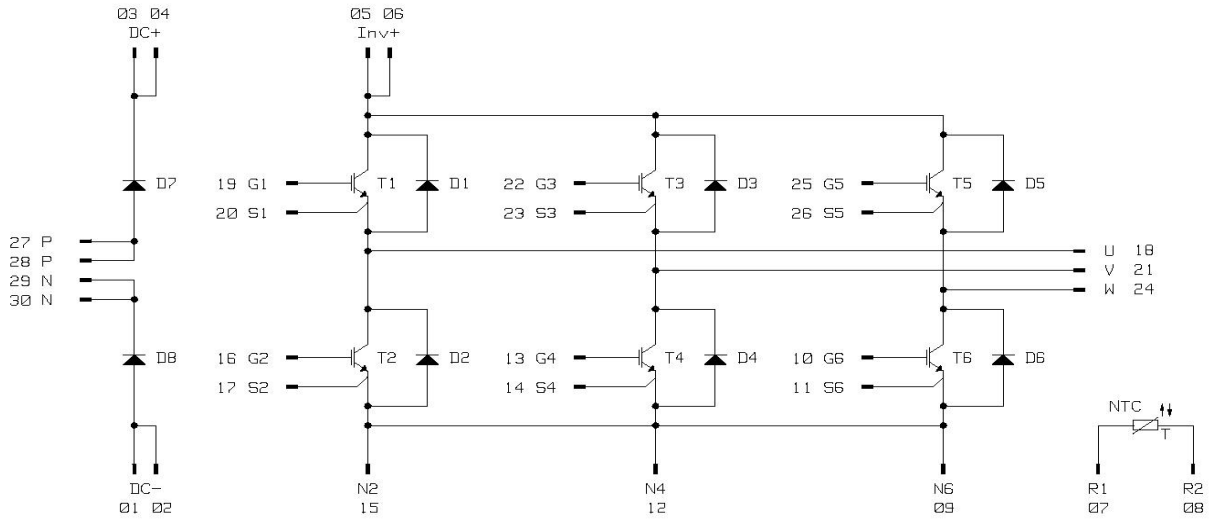

PRODUCT STATUS DEFINITIONS

Datasheet Status	Product Status	Definition
Target	Formative or In Design	This datasheet contains the design specifications for product development. Specifications may change in any manner without notice. The data contained is exclusively intended for technically trained staff.
Preliminary	First Production	This datasheet contains preliminary data, and supplementary data may be published at a later date. Vincotech reserves the right to make changes at any time without notice in order to improve design. The data contained is exclusively intended for technically trained staff.
Final	Full Production	This datasheet contains final specifications. Vincotech reserves the right to make changes at any time without notice in order to improve design. The data contained is exclusively intended for technically trained staff.

DISCLAIMER

The information given in this datasheet describes the type of component and does not represent assured characteristics. For tested values please contact Vincotech.Vincotech reserves the right to make changes without further notice to any products herein to improve reliability, function or design. Vincotech does not assume any liability arising out of the application or use of any product or circuit described herein; neither does it convey any license under its patent rights, nor the rights of others.

LIFE SUPPORT POLICY

Vincotech products are not authorised for use as critical components in life support devices or systems without the express written approval of Vincotech.

As used herein:

1. Life support devices or systems are devices or systems which, (a) are intended for surgical implant into the body, or (b) support or sustain life, or (c) whose failure to perform when properly used in accordance with instructions for use provided in labelling can be reasonably expected to result in significant injury to the user.

2. A critical component is any component of a life support device or system whose failure to perform can be reasonably expected to cause the failure of the life support device or system, or to affect its safety or effectiveness.