SHEET OF

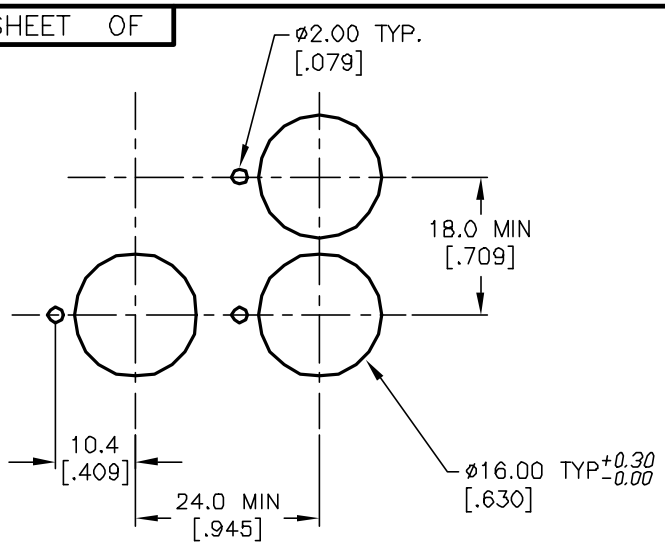

RECOMMEND PANEL MOUNTING

PARTS LIST			
ITEM	QTY.	PART NO.	PART DESCRIPTION
1	1	F040013	P16 EE T11
2	1	F050417	50-004-17 (RED LED)
3	1	F050214	50-002-14 (RED LENS TRANSPARENT)
4	1	F051601	P16 TERMINAL PROTECTOR

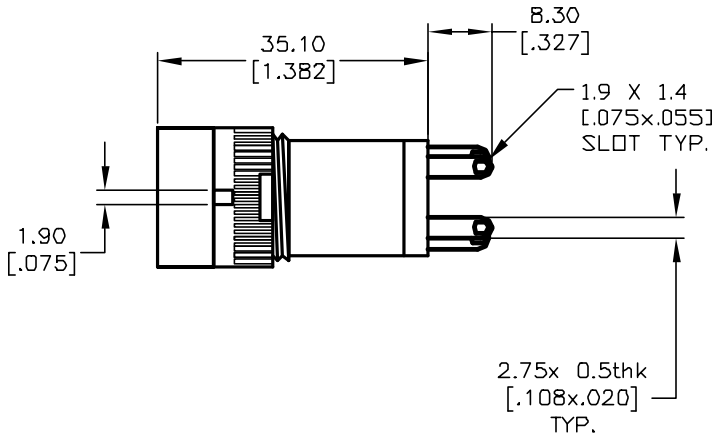

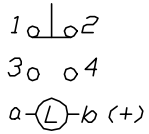

SPST
CONTACT CONFIGURATION

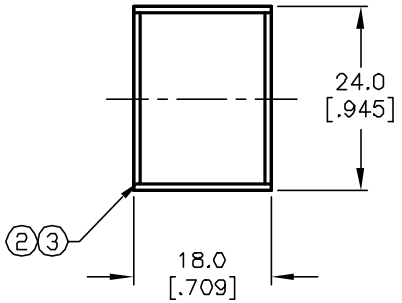

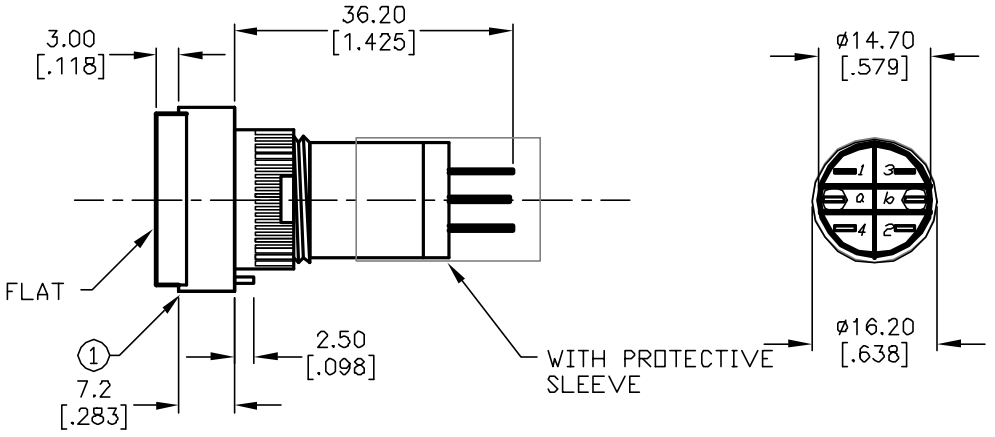

NOTES:

1. ALL DIMENSIONS IN MM [INCH]
2. GENERAL TOLERANCE: X.X=±0.4
   X.XX=±0.25
3. TERM. NOS. FOR REFERENCE ONLY.
4. RATING: 5A@250V AC / 8A@125V AC
5. MECHANICAL LIFETIME: >2 MILLION OPERATIONS
6. TRAVEL: 3.0MM
7. CONTACT MATERIAL: COPPER ALLOY W/SILVER PLATING
8. LAMP VOLTAGE: 6V DC

REV.	ECN No.	DESCRIPTION	DATE	CHKD
A	12746	RELEASED FOR PRODUCTION	1/21/03	CB

THE INFORMATION CONTAINED IN THIS DOCUMENT IS PROPRIETARY TO E-SWITCH AND IS NOT TO BE COPIED OR TRANSFERRED

E-SWITCH®

TITLE: P16 EE T11 H RED RED (LATCHING)

SCALE	DATE	DR	DWG	REV
1.5:1	1/21/03	CB	XF0538P	A