# POWER TRANSFORMER
## CHASSIS MOUNT : Autotransformer

# F-302U

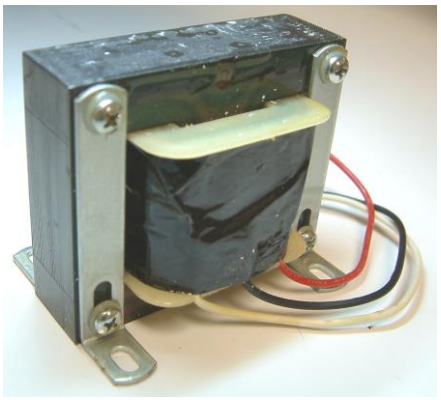

**Electrical Specifications (@25ºC)**

1. Maximum Power: 150 VA
2. Input Voltage: 277 V, 60 Hz only
3. Output Voltage 115V, ± 5% at full load
4. Full Secondary Load 1.3 Amps RMS

**Construction:**
Single winding on a double wall, nylon bobbin. Three leads exit the transformer, the black lead is the tap.

**Description:**
Secondary coil is a fraction of the entire winding for voltage step-down. This causes part of the power to be transferred conductively through the windings, rather than all of the power being transferred by induction.

**Safety:**
These units are designed with 1500V isolation between the winding and the core. Materials and construction are rated for Class B insulation system.

E50476

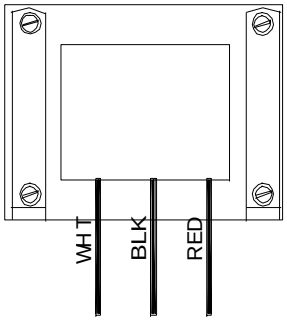


Dimensions: Unit: In inches

| A | B | C | D | E |
|---|---|---|---|---|
| 3.375 | 1.0 | 2.812 | 2.00 | 2.812 |

Mtg Slots: .203X.375 (4)

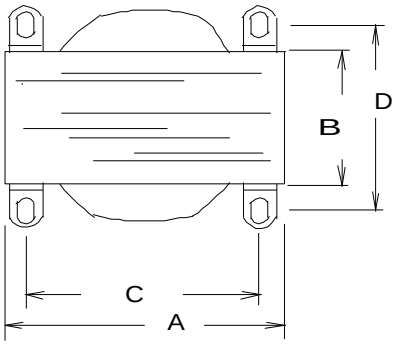


**Schematic:**

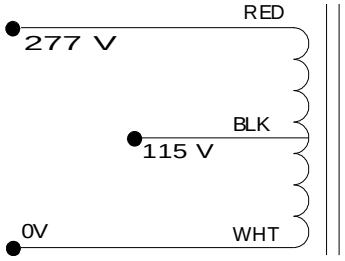


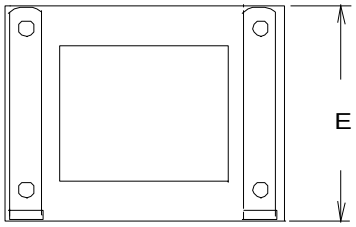


**RoHS Compliance:** As of manufacturing date February 2005, all standard products meet the requirements of 2011/65/EU, known as the RoHS initiative.

* Upon printing, this document is considered “uncontrolled”. Please contact Triad Magnetics’ website for the most current version.

Web: www.TriadMagnetics.com
Phone 951-277-0757
Fax 951-277-2757

460 Harley Knox Blvd.
Perris, California 92571

Publish Date: May 11, 2015