Wireless-Enabled Audio Processor for Hearing Aids

EZAIRO 7160 SL HYBRID

ON Semiconductor®

www.onsemi.com

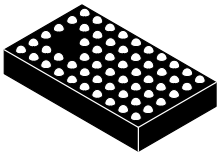

SIP57
CASE 127EX

Introduction

Ezairo® 7160 SL is an open−programmable DSP−based hybrid specifically designed for wireless, high−performance hearing aids. The Ezairo 7160 SL hybrid is based on the Ezairo 7100 System−on−Chip (SoC) and includes RSL10− the industry's lowest power Bluetooth® 5 radio SoC, EA2M a 2 Mb EEPROM, and all necessary passive components for interfacing with transducers.

Ezairo 7100 features a high precision quad−core architecture that delivers 375 MIPS without sacrificing power consumption. The dual−Harvard CFX Digital Signal Processor (DSP) core is optimized to run advanced hearing aid algorithms, while the HEAR Configurable Accelerator engine performs many different types of audio processing. Complementing the DSP core, the Arm® Cortex®−M3 processor supports wireless protocols and combines an open−programmable controller with hardware accelerators for audio coding and error correction support. Ezairo 7100 also includes a programmable Filter Engine that enables time domain filtering and supports an ultra−low−delay audio path.

Offering the industry's lowest power consumption in deep sleep and peak receiving, RSL10 is a highly flexible multi−protocol 2.4 GHz radio specifically designed for use in high−performance wearable and medical applications. With its Arm Cortex−M3 processor and LPDSP32 DSP core, RSL10 supports Bluetooth low energy technology and 2.4 GHz proprietary protocols.

Development Tools

Ezairo Preconfigured Suite (Pre Suite)*

The Ezairo Pre Suite provides a complete framework to easily develop Ezairo−based hearing aids and fitting software. Included in the Ezairo Pre Suite is a firmware bundle, configuration software, and a cross−platform Software Development Kit (SDK) to develop your own fitting software.

RSL10 Development Tools

The RSL10 development tools provide an Eclipse−based SDK complete with Bluetooth profiles and wireless audio codecs for the RSL10's Arm Cortex−M3 processor. The RSL10's LPDSP32 code can be developed using the Synopsys development tools which are available by request.

Open−Programmable Evaluation and Development Kit (EDK)

To develop your own firmware on Ezairo 7160 SL, the Ezairo 7100 Evaluation and Development Kit (EDK) includes optimized hardware, programming interface, and a comprehensive Integrated Development Environment (IDE).

*This datasheet describes all features of the Ezairo 7160 SL hybrid module. Not all of these features are available using the Ezairo Preconfigured Suite.

MARKING DIAGRAM

for OPN E7160−0−102A57−AG

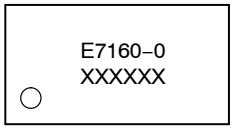

(Top View)

for OPN E7160−0P−102A57−AG

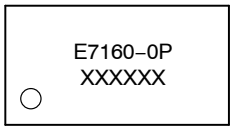

(Top View)

E7160−0 / E7160−0P = Specific Device Code
XXXXXX = Work Order Number

ORDERING INFORMATION

Device	Package	Shipping†
E7160−0−102A57−AG (RoHS Compliant)	SIP57 (Pb−Free)	250 / Tape & Reel
E7160−0P−102A57−AG (RoHS Compliant)*	SIP57 (Pb−Free)	250 / Tape & Reel

†For information on tape and reel specifications, including part orientation and tape sizes, please refer to our Tape and Reel Packaging Specification Brochure, BRD8011/D.

*Includes support for special audio protocol. Please contact your ON Semiconductor representative for more information

© Semiconductor Components Industries, LLC, 2018

May, 2020 − Rev. 6

Publication Order Number:
E7160/D

Key Features

- **Programmable Flexibility:** The open−programmable DSP−based system can be customized to the specific signal processing needs of manufacturers. Algorithms and features can be modified or completely new concepts implemented without having to modify the chip.
- **Fully Integrated Hybrid:** Includes the Ezairo 7100 SoC, RSL10 radio SoC, 2 Mb of EEPROM memory, and the necessary passive components to directly interface with the transducers required in a hearing aid.
- **Fitting Support:** Support for Microcard, HI−PRO 2, HI−PRO USB, QuickCom, and NOAHlink™, including NOAHlink's audio streaming feature.
- These devices are Pb−Free, Halogen Free/BFR Free and are RoHS Compliant

Ezairo 7100 DSP Main Features:

- **Quad−core Architecture:** Includes a CFX DSP, a HEAR Configurable Accelerator, an Arm Cortex−M3 Processor Subsystem and a programmable Filter Engine. The system also includes an efficient input/output controller (IOC), system memories, input and output stages along with a full complement of peripherals and interfaces.
- **CFX DSP:** A highly cycle−efficient, programmable core that uses a 24−bit fixed−point, dual−MAC, dual−Harvard architecture.
- **HEAR Configurable Accelerator:** An optimized signal processing engine designed to perform common signal processing operations and complex standard filterbanks.
- **Arm Cortex−M3 Processor Subsystem:** A complete subsystem that supports efficient data transfer to and from the wireless transceiver or multiple transceivers.
- **Programmable Filter Engine:** A filtering system that allows applying a various range of pre− or post−processing filtering, such as IIR, FIR and biquad filters.
- **Configurable System Clock Speeds:** 1.28 MHz, 1.92 MHz, 2.56 MHz, 3.84 MHz, 5.12 MHz, 6.4 MHz, 7.68 MHz, 8.96 MHz, 9.60 MHz, 10.24 MHz (default clock calibration), 12.80 MHz and 15.36 MHz to optimize the computing performance versus power consumption ratio. The calibration entries for these 12 clock speeds are stored in the manufacturing area of the EEPROM.
- **Ultra−high Fidelity:** 85 dB system dynamic range with up to 110 dB input signal dynamic range, exceptionally−low system noise and low group delay.
- **Ultra−low Power Consumption:** <0.7 mA @ 10.24 MHz system clock (executing a tight MAC−loop in the CFX DSP core plus a typical hearing aid filterbank on the HEAR Configurable Accelerator).
- **Data Security:** Sensitive program data can be encrypted for storage in EEPROM to prevent unauthorized parties from gaining access to proprietary algorithm intellectual property.
- **High Speed Communication Interface:** Fast I^2C−based interface for quick download, debugging and general communication.
- **Highly Configurable Interfaces:** Two PCM interfaces, two I^2C interfaces, two SPI interfaces, a UART interface as well as multiple GPIOs can be used to stream configuration, control or signal data into and out of the Ezairo 7160 SL hybrid.

RSL10 Main Features:

- **Arm Cortex−M3 Processor:** A 32−bit core for real−time applications, specifically developed to enable high−performance low−cost platforms for a broad range of low−power applications.
- **LPDSP32:** A 32−bit Dual Harvard DSP core that efficiently supports audio codecs required for wireless audio communication. Various codecs are available to customers through libraries that are included in RSL10's development tools.
- **Radio Frequency Front−End:** Based on a 2.4 GHz RF transceiver, the RFFE implements the physical layer of the Bluetooth low energy technology standard and other proprietary or custom protocols.
- **Protocol Baseband Hardware:** Bluetooth 5 certified and includes support for a 2 Mbps RF link and custom protocol options. The RSL10 baseband stack is supplemented by support structures that enable implementation of ON Semiconductor and customer designed custom protocols.

Table 1. ABSOLUTE MAXIMUM RATINGS

Symbol	Parameter	Min	Max	Unit
VBAT	Power supply voltage		2	V
RCVRBAT	Output drivers power supply voltage		2	V
$VDDO_2$	I/O supply voltage		3.3 (Note 1)	V
Vin	Voltage at any input pin	GNDC−0.3	VDDO + 0.3	V
DGND, AGND, HGND	Digital and Analog Grounds	0	–	V
T functional	Functional temperature range (Note 2)	−40	85	°C
T operational	Operational temperature range (Note 2)	0	50	°C
T storage	Storage temperature range	−40	85	°C
Caution: Class 2 ESD Sensitivity, JESD22−A114−B (2000 V)				

Stresses exceeding those listed in the Maximum Ratings table may damage the device. If any of these limits are exceeded, device functionality should not be assumed, damage may occur and reliability may be affected.

1. In some applications, VDDO can be higher than 2.1 V (maximum 3.3 V). In such cases, the user must set the VDDM voltage at a minimum of 1.1 V
2. Electrical Specification may exceed listed tolerances when out of the temperature range 0 to 50°C

Electrical Performance Specifications

The tests were performed at 20°C with a 1.25 V supply voltage and 4.7 Ω series resistor to simulate a nominal hearing aid battery. The system clock (SYS_CLK) was set to 5.12 MHz and an audio input sampling frequency of 16 kHz was used. Parameters marked as screened are tested on each chip.

Table 2. ELECTRICAL SPECIFICATIONS

Description	Symbol	Conditions	Min	Typ	Max	Units	Screened
OVERALL							
Supply Voltage	VBAT	Supply voltage measured at the VBAT pin	1.18 (Note 3, 4)	1.25	2.0	V	
I/O Supply Voltage Domain 2	$VDDO_2$		1.05	–	3.3	V	

3. In order to be able to use a VBAT Min of 1.1 V, the following reduced operating conditions for the RSL10 should be observed:
   – Maximum Tx power 0 dBm.
   – SYSCLK ≤ 24 MHz.
   – Functional temperature range limited to 0 – 50°C
   The following trimming parameters should be used:
   – VCC = 1.10 V
   – VDDC = 0.92 V
   – VDDM = 1.05 V, will be limited by VCC at end of battery life
   – VDDRF = 1.05 V, will be limited by VCC at end of battery life. VDDPA should be disabled
   RSL10 should enter in end−of−battery−life operating mode if VCC falls below 1.03 V. VCC will remain above 1.03 V if VBAT ≥ 1.10 V under the restricted operating conditions described above.
4. Min VBAT = 1.05 V if RSL10 is disabled

Table 2. ELECTRICAL SPECIFICATIONS (continued)

Description	Symbol	Conditions	Min	Typ	Max	Units	Screened
OVERALL							
Current consumption	I_{VBAT}	Filterbank: 30% load CFX: 100% load SYS_CLK: 10.24 MHz, No activity on the RSL10	–	700	–	μA	
		Pre Suite FW running at 15.36 MHz. Algorithms enabled: SG (dynamic), EQ, WDRC, NR, FBC (with Gain Management). No transducers connected. RSL10 in sleep mode.	–	1.31	–	mA	
		Pre Suite FW running at 15.36 MHz. Algorithms enabled: SG (dynamic), EQ, WDRC, NR, FBC (with Gain Management). No transducers connected. RSL10 enabled with BLE connection between the Ezairo 7160 SL and a phone or a dongle.	–	2.18	–	mA	
		Pre Suite FW running at 15.36 MHz. Algorithms enabled: SG (dynamic), EQ, WDRC, NR, FBC (with Gain Management). No transducers connected. RSL10 in RX streaming audio mode using the ON Semiconductor proprietary audio streaming protocol	–	2.81	–	mA	
Stand by current	I_{stb}	Using ON Semiconductor's macro		40	120	μA	
VREG							
Regulated voltage output	VREG	I_{load} = 100 μA	0.96	0.97	0.98	V	✓
Regulator PSRR	$VREG_{PSRR}$	1 kHz, VBAT = 1.25 V	76	80	–	dB	
Load current	I_{LOAD}		–	–	2	mA	
Load regulation	$LOAD_{REG}$	5 μA < Iload < 2 mA	–	4	10	mV/mA	
Line regulation	$LINE_{REG}$	Iload = 1 mA	–	2	5	mV/V	
VDDA							
Output voltage trimming range	VDDA	Control register configured, typical values	1.8	2.0	2.1	V	✓
Regulator PSRR	$VDDA_{PSRR}$	1 kHz, VBAT = 1.25 V	40	50	–	dB	
Load current	I_{LOAD}		–	–	1	mA	
Load regulation	$LOAD_{REG}$	VBAT = 1.2 V; 100 μA < Iload < 1 mA	–	4	10	mV/mA	
Line regulation	$LINE_{REG}$	1.2 V < VBAT < 1.86 V; Iload = 100 μA	–	6	20	mV/V	
VDBL							
Output voltage trimming range	VDBL	Control register configured, typical values, unloaded	1.6	2.0	2.2	V	✓
Regulator PSRR	$VDBL_{PSRR}$	1 kHz, VBAT=1.25 V	30	40	–	dB	
Load current	I_{LOAD}	ITRIM (A_CP_VDBL_CTRL) = 0x7	–	–	15	mA	
Load regulation	$LOAD_{REG}$	VBAT = 1.2 V; 100 μA < Iload < 3 mA	–	4	10	mV/mA	
Line regulation	$LINE_{REG}$	VBAT > 1.2 V; Iload = 100 μA	–	6	20	mV/V	
VDDC							
Digital supply output voltage trimming range	VDDC	Control register configured, typical values, unloaded	0.72	– (Note 5)	1.32	V	✓

Table 2. ELECTRICAL SPECIFICATIONS (continued)

Description	Symbol	Conditions	Min	Typ	Max	Units	Screened
VDDC							
VDDC output level adjustment	$VDDC_{STEP}$		1.5	2.5	3	mV	✓
Regulator PSRR	$VDDC_{PSRR}$	1 kHz, VBAT = 1.25 V	25	30	–	dB	
Load current	I_{LOAD}	Delivered by LDO	–	–	5	mA	
Load regulation	$LOAD_{REG}$		–	5	10	mV/mA	
Line regulation	$LINE_{REG}$		–	6	12	mV/V	
VDDM							
Memory supply output voltage trimming range	VDDM	Control register configured, typical values, unloaded	0.82	– (Note 6)	1.32	V	✓
VDDM output level adjustment	$VDDM_{STEP}$		1.5	2.5	3	mV	✓
Regulator PSRR	$VDDM_{PSRR}$	1 kHz, VBAT = 1.25 V	25	30	–	dB	
Load current	I_{LOAD}	Delivered by LDO	–	–	5	mA	
Load regulation	$LOAD_{REG}$		–	5	10	mV/mA	
Line regulation	$LINE_{REG}$		–	6	12	mV/V	
POWER−ON−RESET (triggered from the RSL10 value)							
POR voltage	$VBAT_{POR}$		–	–	1.0	V	
INPUT STAGE							
Analog input voltage range	V_{IN}		0	–	2	V	
Preamplifier gain	PAG	3 dB steps	0	–	36	dB	✓
Preamplifier gain accuracy	PAG acc	1 kHz, PAG from 0 to 36 dB	−1.5	0	1.5	dB	✓
Input impedance	R_{IN}	Non−0dB preamplifier gains	370	500	725	kΩ	✓
Input referred noise	IN_{IRN}	AIR connected to AGND Unweighted, 100 Hz to 10 kHz BW Preamplifier settings:				μVrms	
		0 dB	–	53	–		
		12 dB	–	13	–		
		15 dB	–	9	–		
		18 dB	–	6.6	10.6		✓
		21 dB	–	4.9	–		
		24 dB	–	4.3	–		
		27 dB	–	3.7	–		
		30 dB	–	3.2	–		
		33 dB	–	3.2	–		
		36 dB	–	3.2	–		

Table 2. ELECTRICAL SPECIFICATIONS (continued)

Description	Symbol	Conditions	Min	Typ	Max	Units	Screened
INPUT STAGE							
Input Dynamic Range (Note 7)	IN_{DR}	AIR connected to AGND Unweighted, 100 Hz to 10 kHz BW Preamplifier settings:				dB	
		0 dB	–	86	–		
		12 dB	–	86	–		
		15 dB	–	86	–		
		18 dB	81	86	–		✓
		21 dB	–	85	–		
		24 dB	–	82	–		
		27 dB	–	82	–		
		30 dB	–	80	–		
		33 dB	–	77	–		
		36 dB	–	74	–		
Input peak THD+N	IN_{THD+N}	Gain between 0 and 30 dB, −10 dBFS signal, 1 kHz	–	–	−68	dB	✓
Input peak THD+N	IN_{THD+N}	Gain between 33 and 36 dB, −10 dBFS signal, 1 kHz.	–	–	−66	dB	
OUTPUT DRIVER							
Maximum peak current	I_{DO}	High Power mode	–	–	25	mA	
Output impedance	R_{DO}	Normal mode, Iload = 1 mA	–	4.5	5.5	Ω	
Output impedance	R_{DO}	High Power mode	–	2.5	4	Ω	
Output dynamic range	DO_{DR}	Normal mode, VBAT = 1.25 V	90	–	–	dB	
Output THD+N	DO_{THDN}	At 1 kHz, −6 dBFS, 8 kHz bandwidth, VBAT = 1.25 V, normal mode	–	−78	−76	dB	
10−BIT LOW−SPEED A/D							
Input voltage range	$LSAD_{RANGE}$	Peak input voltage	0	–	1.94	V	✓
INL	$LSAD_{INL}$	From GND to 2*VREG	−4	–	+4	LSB	
DNL	$LSAD_{DNL}$	From GND to 2*VREG	−2	–	+2	LSB	
Sampling frequency	$LSAD_{SF}$	All channels sequentially	–	12.8	–	kHz	
Channel sampling frequency	$LSAD_{CH_SF}$		–	1.6	–	kHz	
SIGNAL DETECTION UNIT							
Preamplifier gain	SDU_{PAG}	3 dB steps	0	–	36	dB	✓
Equivalent IRN	SDU_{IRN}	Non−weighted, 30 dB gain, 100 Hz – 10 kHz	–	–	20	μVrms	✓
Input impedance	SDU_{R}		370	500	725	kOhm	✓
Low Pass Filter Bandwidth	SDU_{LPF}		–	50	–	kHz	
ADC input signal range	SDU_{RANGE}	Referred to VREG	−1	–	+1	V	
ADC resolution	SDU_{RES}			12	–	bits	
ADC sampling frequency	SDU_{SF}	At slow_clock = 1.28 MHz	1	–	64	kHz	

Table 2. ELECTRICAL SPECIFICATIONS (continued)

Description	Symbol	Conditions	Min	Typ	Max	Units	Screened
DIGITAL							
Voltage level for high input	V_{IH}		VDDO *0.8	–	–	V	✓
Voltage level for low input	V_{IL}		–	–	VDDO*0.2	V	✓
Voltage level for high output	V_{OH}	2 mA source current	VDDO *0.8	–		V	✓
Voltage level for low output	V_{OL}	2 mA sink current	–	–	VDDO*0.2	V	✓
Oscillator frequency trimming precision	SYS_CLK		–1	–	+1	%	✓
Oscillator frequency stability over temperature	SYS_CLK	Over temperature range of 0 to 50°C	–1.5	–	+1.5	%	
Recommended working frequency	SYS_CLK	For recommended VDDC and VDDM	1.28	–	15.36	MHz	
Oscillator period jitter		RMS at System clock: 1.28 MHz, before multiplication	–	–	400	ps	
PLL lock time		For an input phase error <2%, input reference clock of 128 kHz, output clock of 2.56 MHz	–	–	10	ms	✓
PLL tracking range			–2	–	2	%	
LOW DELAY PATH							
Group Delay		Using the low delay path of the Filter Engine	–	44	–	μs	

Product parametric performance is indicated in the Electrical Characteristics for the listed test conditions, unless otherwise noted. Product performance may not be indicated by the Electrical Characteristics if operated under different conditions.

5. Recommended VDDC values depend on the system clock (SYS_CLK) frequency. Table 3 gives the recommended VDDC values for different system clocks.
6. The minimum VDDM value required for proper system functioning is 0.90 V
7. The audio performance might be slightly impacted when the RSL10 radio is turned on. Degradation depends on the duty cycle of the communication, on the external components.

Table 3. RECOMMENDED MINIMUM VDDC LEVEL

Operating Frequency (MHz)	Minimum VDDC Voltage (V)
1.28 to 5.12	0.73
5.13 to 10.24	0.82 (Note 8)
10.25 to 12.8	0.85
12.81 to 15.36	0.88 (Note 9)

8. The default VDDC calibration entry, stored in the manufacturing area of the EEPROM at address 0x0064, should be used for operation at 0.82 V.
9. An alternate VDDC calibration entry, stored in the manufacturing area of the EEPROM at address 0x00E8, should be used for operation at 0.88 V.

Table 4. EA2M ELECTRICAL SPECIFICATIONS

EEPROM burn cycles			1,000,000	–	–	Cycles
Current consumption – writing to EEPROM	I_W		–	0.7	–	mA
Current consumption – read from EEPROM	I_R		–	0.4	–	mA

*The electrical specifications of the EA2M EEPROM can be found in the EA2M datasheet.

Table 5. RSL10 ELECTRICAL SPECIFICATIONS

Current consumption RX	I_{VBAT}	Rx Mode, ON Semiconductor proprietary audio streaming protocol at 7 kHz audio BW, 37 ms delay.	–	1.15	–	mA
Standby Mode current	I_{stb}	Digital blocks and memories are not clocked and are powered at a reduced voltage.	–	30	–	μA
Peak Current consumption at 1 Mbps	$IBAT_{RFRX}$	VDDRF =1.1 V, 100% duty cycle	–	5.6	–	mA
Rx Sensitivity, 1 Mbps, BLE		0.1% BER, Single−ended on chip antenna match to 50 Ω	–	−94	–	dBm
Tx peak power consumption at VBAT = 1.25 V (Note 10)	$IBAT_{RFTX}$	Tx power 0 dBm, VDDRF = 1.07 V, VDDPA: off, LDO mode	–	8.9	–	mA

*The electrical specifications of the RSL10 radio SoC can be found in the RSL10 datasheet.
10. The Ezairo 7160 SL EVB, with a +2.2dBi SMA antenna, will not pass regulatory certification for TX power > 1 dBm
11. For Open−Programmable customers (who are not using the Pre Suite FW):
The optimal setting for the RSL10 48MHz trim “XTAL_TRIM_XTAL_TRIM_BYTE” is 0xCB. This is set via the RSL10 SDK by inserting the command “RF_PLL_CTRL−>XTAL_TRIM_XTAL_TRIM_BYTE = 0xCB;” after the BLE_Initialize(); command.

Packaging and Manufacturing

- **Ultra−Miniature:** Suitable for all hearing aid styles including CIC, ITE, RITE, BTE, and mini−BTE.
- **Reflowable:** Ezairo 7160 SL is re−flowable onto FR4 and other substrates.
- **RoHS Compliant:** Ezairo 7160 SL complies with the RoHS directive.

System Diagram

Figure 1 is a simplified diagram of the hybrid system that shows the major internal functional blocks and possible external peripherals.

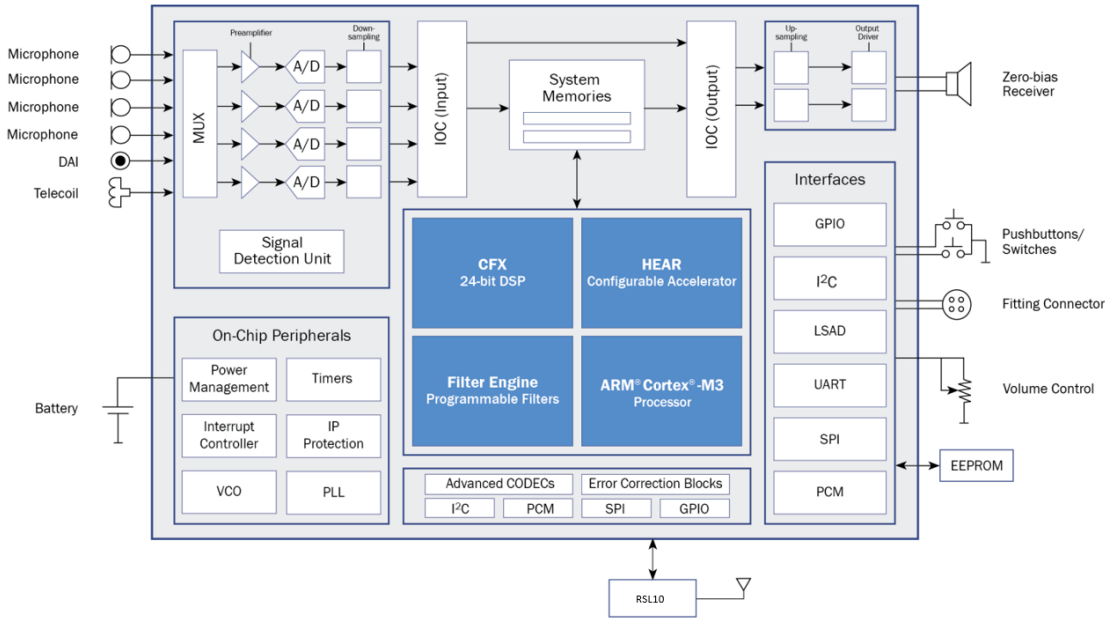

Figure 1. Ezairo 7160 SL Hybrid System Diagram

Ezairo 7160 SL Hybrid Interface Specifications

A total of 57 pads are present on the Ezairo 7160 SL hybrid. These pads are the interfaces between the hybrid and the other components in the hearing aid. They are listed in Table 6 along with the internal connections.

Table 6. PAD DESCRIPTION

Ball Number	Hybrid Pad Name	Hybrid Pad Description
A1	VSSRF	RF analog ground
A2	VSSRF	RF analog ground
A3	VSSRF	RF analog ground
A4	VBAT	Power Supply
A5	DGND	Digital ground for the Ezairo 7100
A6	NRESET	Reset pin for the Ezairo 7100
A7	DIO21	Digital Input Output 21 for the Ezairo 7100
A8	SCL	Debug Port Clock for the Ezairo 7100
A9	SDA	Debug Port Data for the Ezairo 7100
A10	RCVRBAT	Output Stage Power Supply for the Ezairo 7100
B1	VSSRF	RF analog ground
B2	VSSRF	RF analog ground
B3	RFIO12	Digital Input Output 12 for the RSL10
B4	VDDO2	IO Power Supply for DIO20 to DIO29 of Ezairo 7100 and for all DIO of the RSL10
B5	DIO9	Digital Input Output 9 for the Ezairo 7100
B6	DIO6	Digital Input Output 6 for the Ezairo 7100
B7	DIO20	Digital Input Output 20 for the Ezairo 7100
B8	RCVR1N	Receiver Output 1 Negative for the Ezairo 7100

Table 6. PAD DESCRIPTION

Ball Number	Hybrid Pad Name	Hybrid Pad Description
B9	RCVR0N	Receiver Output 0 Negative for the Ezairo 7100
B10	HGND	Output Driver Ground for the Ezairo 7100
C1	RF	RF signal input/output (Antenna)
C3	JTCK	CM3−JTAG Test Clock for the RSL10
C4	VDBL	Regulated doubled voltage output for Ezairo 7100
C5	DIO8	Digital Input Output 8 for the Ezairo 7100
C6	DIO5	Digital Input Output 5 for the Ezairo 7100
C7	DIO22	Digital Input Output 22 for the Ezairo 7100
C8	RCVR1P	Receiver Output 1 Positive for the Ezairo 7100
C9	RCVR0P	Receiver Output 0 Positive for the Ezairo 7100
C10	DIO29	Digital Input Output 29 for the Ezairo 7100
D1	VSSA	Analog ground for the RSL10
D4	JTMS	CM3−JTAG Test Mode State for the RSL10
D5	RFNRESET	Reset pin for the RSL10
D6	DIO4	Digital Input Output 4 for the Ezairo 7100
D7	DIO7	Digital Input Output 7 for the Ezairo 7100
D8	EXTCLK	EXT_CLK pin for the Ezairo 7100
D9	DIO23	Digital Input Output 23 for the Ezairo 7100
D10	DIO24	Digital Input Output 24 for the Ezairo 7100
E1	XTAL32KN	Xtal input pin for 32 kHz xtal
E2	RES	RESERVED
E3	RFGND	RF Ground for RSL10
E4	AOUT	Analog test pin
E5	RFIO0	Digital Input Output 0 for the RSL10
E6	RFIO1	Digital Input Output 1 for the RSL10
E7	GND_MIC	Input Transducer Ground for the Ezairo 7100
E8	VMIC	Regulated voltage for microphone for the Ezairo 7100
E9	AI3	Analog Input 3: Direct Analog Input for the Ezairo 7100
E10	AGND	Analog Ground for the Ezairo 7100
F1	XTAL32KP	Xtal output pin for 32 kHz xtal
F2	VDCRF	DC−DC output voltage to external LC filter for RSL10
F3	RFGND	RF Ground for RSL10
F4	RFIO2	Digital Input Output 2 for the RSL10
F5	VCCRF	DC−DC filtered output for the RSL10
F6	RFIO3	Digital Input Output 3 for the RSL10
F7	AI0	Analog Input 0: Microphone or Telecoil Input for the Ezairo 7100
F8	AI1	Analog Input 1: Microphone or Telecoil Input for the Ezairo 7100
F9	AI2	Analog Input 2: Microphone or Telecoil Input for the Ezairo 7100
F10	VREG	Regulated voltage output for the Ezairo 7100

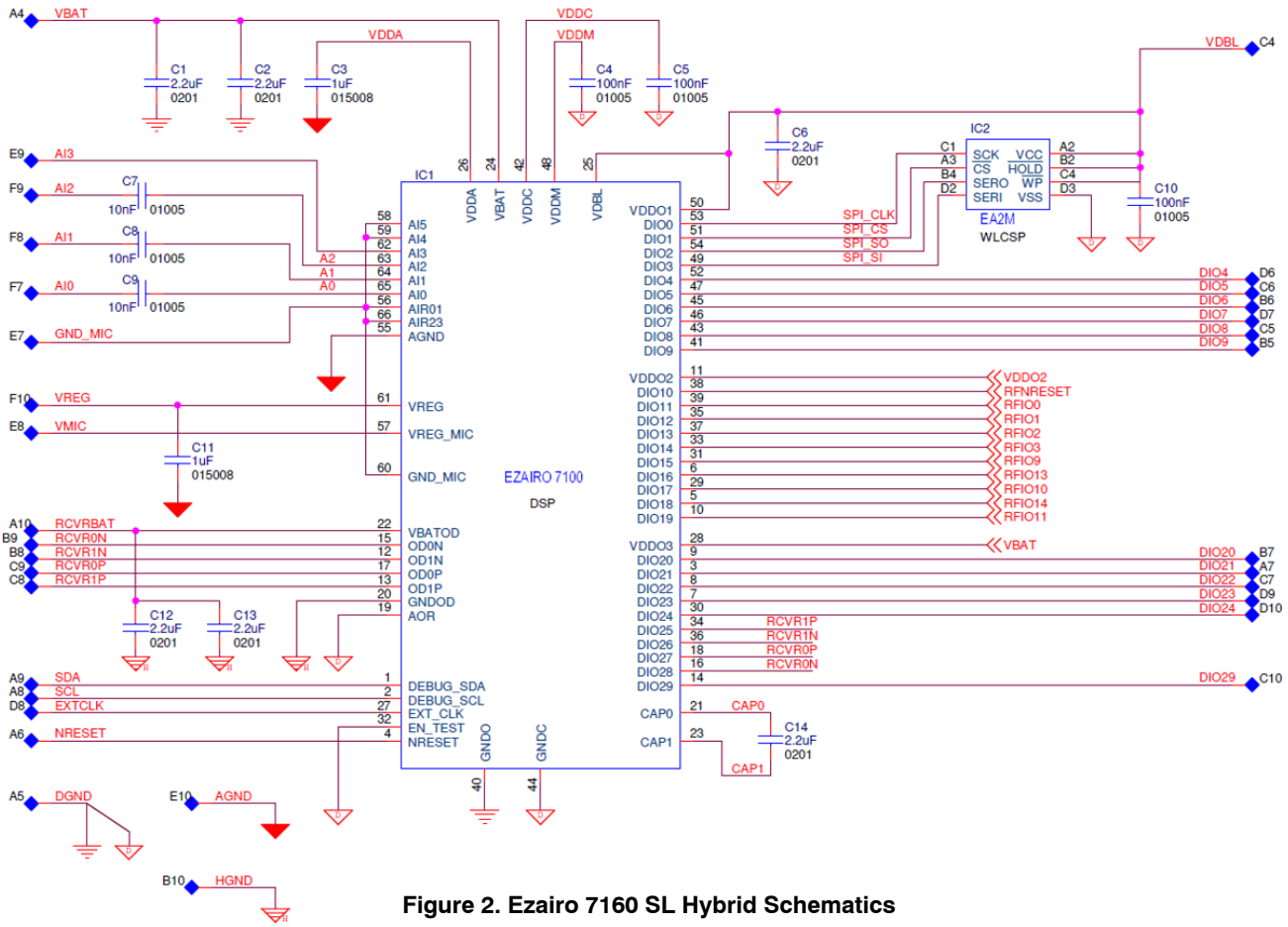

Figure 2. Ezairo 7160 SL Hybrid Schematics

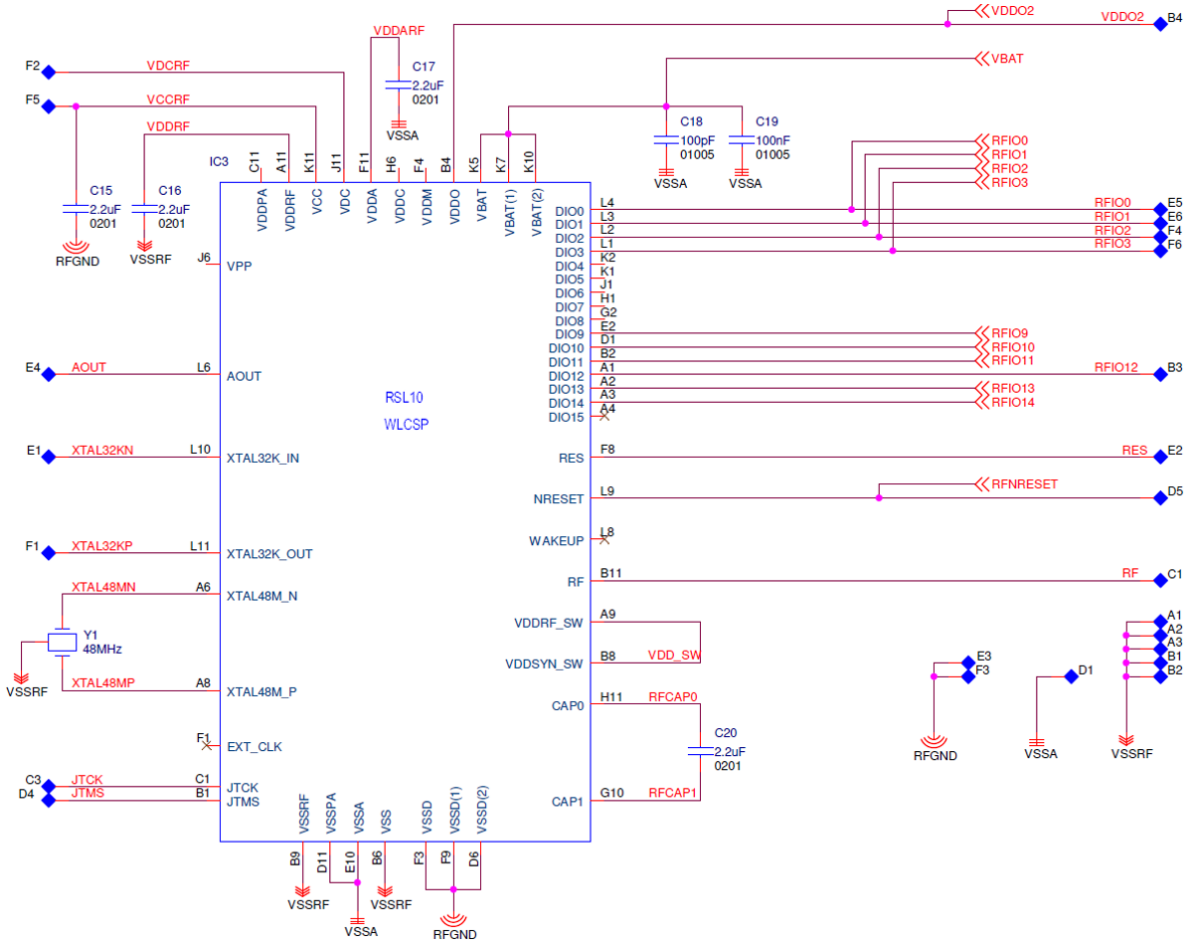

Figure 3. Ezairo 7160 SL Hybrid Schematics

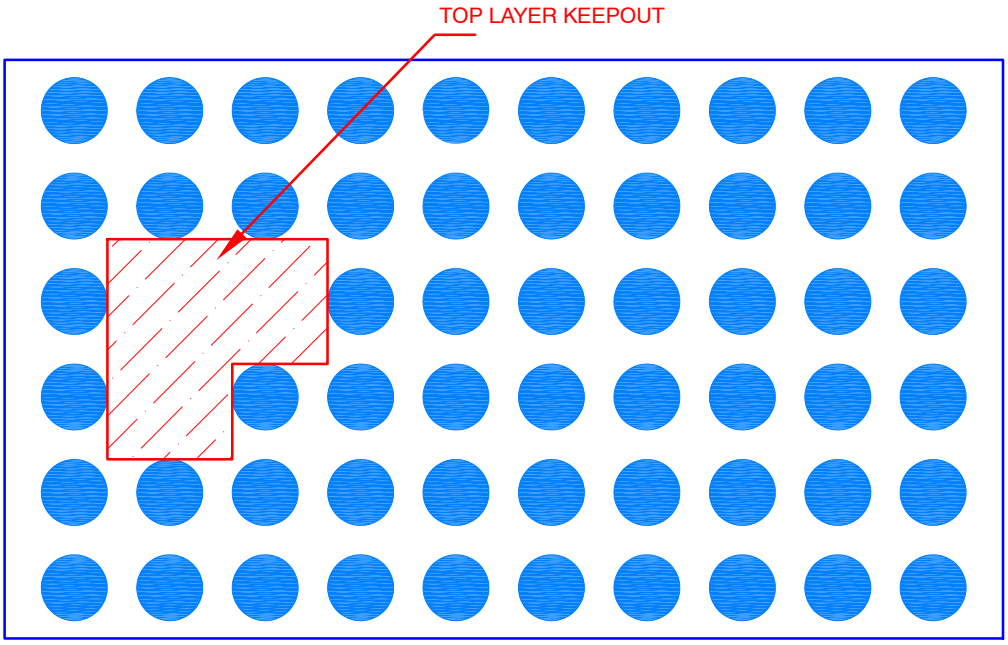

Figure 4. Ezairo 7160 SL Keep−out Area

Connection Diagram

The following connections should be observed when the Ezairo 7160 SL is used in typical hearing aid applications:

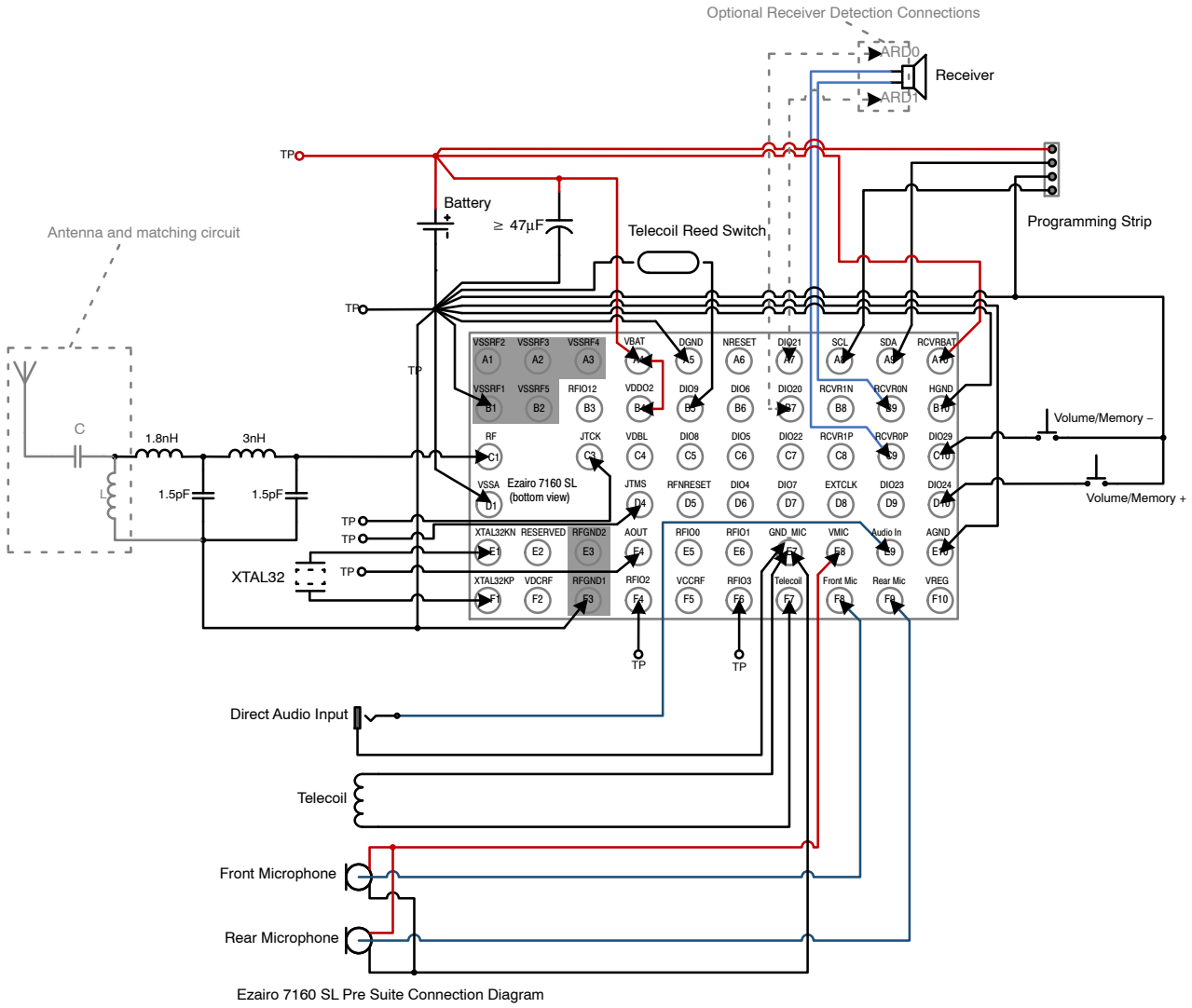

Figure 5. Connection Diagram, Bottom View

NOTE: – ON Semiconductor recommends to use the 9HT12–32.768KDZF–T SMD crystal from TXC corporation or the WMRAG32K76CS1C00R0 MEMS resonator from Murata.
– Harmonic filter on RF pin required to pass regulatory emission tests
– For the purposes of BT–SIG certification, the following signals must be accessible or brought out to solderable test points: VBAT, GND, and either RFIO2 & RFIO3 (VDDO2 = VBAT domain) or DIO24 & DIO29 (VDDO3 = VBAT domain).
(Please see AND9838/D for more details)

EZAIRO 7100 ARCHITECTURE OVERVIEW

The Ezairo 7100 system is an asymmetric quad−core architecture, mixed−signal system−on−chip designed specifically for audio processing. It centers around four processing cores: the CFX Digital Signal Processor (DSP), the HEAR Configurable Accelerator, the Arm Cortex−M3 Processor Subsystem, and the Filter Engine.

CFX DSP Core

The CFX DSP core is used to configure the system and the other cores, and it coordinates the flow of signal data progressing through the system. The CFX DSP can also be used for custom signal processing applications that can't be handled by the HEAR or the Filter Engine.

The CFX DSP is a user−programmable general−purpose DSP core that uses a 24−bit fixed−point, dual−MAC, dual−Harvard architecture. It is able to perform two MACs, two memory operations and two pointer updates per cycle, making it well−suited to computationally intensive algorithms.

The CFX features:

- Dual−MAC 24−bit load−store DSP core
- Four 56−bit accumulators
- Four 24−bit input registers
- Support for hardware loops nested up to four deep
- Combined XY memory space (48 bits wide)
- Dual address generator units
- A wide range of addressing modes:
  - Direct
  - Indirect with post−modification
  - Modulo addressing
  - Bit reverse

For further information on the usage of the CFX DSP, please refer to the *Hardware Reference Manual* and to the *CFX DSP Architecture Manual*.

HEAR Configurable Accelerator

The HEAR coprocessor is designed to perform both common signal processing operations and complex standard filterbanks such as the WOLA filterbank, reducing the load on the CFX DSP core.

The HEAR Configurable Accelerator is a highly optimized signal processing engine that is configured through the CFX. It offers high speed, high flexibility and high performance, while maintaining low power consumption. For added computing precision, the HEAR supports block floating point processing. Configuration of the HEAR is performed using the HEAR configuration tool (HCT). For further information on the usage of the HEAR, please refer to the *HEAR Configurable Accelerator Reference Manual*.

The HEAR is optimized for advanced hearing aid algorithms including but not limited to the following:

- Dynamic range compression
- Directional processing
- Feedback cancellation
- Noise reduction

To execute these and other algorithms efficiently, the HEAR excels at the following:

- Processing using a weighted overlap add (WOLA) filterbank
- Time domain filtering
- Subband filtering
- Attack/release filtering
- Vector addition/subtraction/multiplication
- Signal statistics (such as average, variance and correlation)

Arm Cortex−M3 Processor Subsystem

The Arm Cortex−M3 Processor Subsystem provides support for data transfer to and from the wireless transceiver. The subsystem includes hardwired CODECS (G.722, CVSD), Error Correction support (Reed−Solomon, Hamming), interfaces (SPI, I^2C, PCM, GPIOs), as well as an open−programmable Arm Cortex−M3 processor.

Arm Cortex−M3 Processor

The Arm Cortex−M3 processor is a low−power processor that features low gate count, low interrupt latency, and low−cost debugging. It is intended for deeply embedded applications that require fast interrupt response features.

GNU tools provide build and link support C programs that run on the Arm Cortex−M3 processor.

Filter Engine

The Filter Engine is a core that provides low−delay path and basic filtering capabilities for the Ezairo 7100 system. The Filter Engine can implement filters (either FIR or IIR) with a total of up to 160 coefficients. FIR filters are implemented using a direct−form structure. IIR filters are implemented with a cascade of second−order sections (biquads), each implemented as a direct−form I filter.

The Filter Engine is programmable, but does not include direct debugging access. The CFX can monitor the Filter Engine state through control and configuration registers on the program memory bus.

Ezairo 7160 SL IOs

Digital Input/Output (DIO) Pads

A total of 12 DIOs of the Ezairo 7100 are available on the Ezairo 7160 SL hybrid. These pads can all be configured for a variety of digital input and output modes or as LSADs. The user can configure DIOs signal to be, for example:

- CFX PCM interface
- CFX UART interface
- CFX SPI interface

- LSAD input
- GPIOs data for the CFX
- Arm Cortex−M3 processor PCM interface
- Arm Cortex−M3 processor SPI interface
- Arm Cortex−M3 processor I^2C interface
- Arm Cortex−M3 processor GPIOs

More details on the Ezairo 7160 SL external interfaces can be found in the Ezairo 7100 Hardware Reference Manual.

The 12 DIOs are split into two power domains as follow:

- DIO4, DIO5, DIO6, DIO7, DIO8 and DIO9 are at the VDBL voltage.
- DIO20, DIO21. DIO22, DIO23, DIO24 and DIO29 are at the VBAT voltage.

5 DIOs of the RSL10 are routed out of the Ezairo 7160 SL hybrid:

- RFIO0, shared with DIO11 of the Ezairo 7100
- RFIO1, shared with DIO12 of the Ezairo 7100
- RFIO2, shared with DIO13 of the Ezairo 7100
- RFIO3, shared with DIO14 of the Ezairo 7100
- RFIO12

The debug port pads for the Ezairo 7100 SDA and SCL are at the VBAT voltage.

Debug Ports

The CFX's I^2C interfaces share the same I^2C bus within the Ezairo 7100 chip with two other I^2C interfaces:

CFX Debug Port I^2C

The CFX debug port I^2C interface is a hardware debugger for the Ezairo 7100 system that is always enabled regardless of the configuration of the general−purpose I^2C interface. The debug port implements the debug port protocol command set and is tightly coupled with the CFX DSP and the memory components attached to the CFX. The default address is 0x60.

Arm Cortex−M3 Processor Debug Port I^2C

The Arm Cortex−M3 debug port I^2C interface is a hardware debugger for the Ezairo 7100 system that is always enabled regardless of the configuration of the general−purpose I^2C interface. The debug port implements an Arm Cortex−M3 processor debug port protocol command set that is tightly coupled with the Arm Cortex−M3 processor and the memory components attached to this core. The default address is 0x40.

The Arm Cortex−M3 processor of the RSL10 can be debugged through the SWJ−DP which can be configured to either serial wire or JTAG debug port communications. By default, the SWJ−DP is accessed using the JTAG dedicated pads (JTCK, JTMS). It is advisable to include JTAG test points on your PCB in the event that the RSL10 should require re−programming or debugging at the hearing aid level (see Figure 5: Connection Diagram).

PRE SUITE FIRMWARE BUNDLE

The Pre Suite Firmware Bundle of Ezairo 7160 SL comprises a real−time framework and suite of advanced sound processing algorithms ideal for high−end, full featured hearing aids (available under NDA). For additional details about the Pre Suite firmware bundle for Ezairo 7160 SL refer to Ezairo 7160 SL Firmware Bundle User's Guide.

DEFAULT APPLICATION ON EZAIRO 7160 SL

The default application includes functionality that allows the applications of the Ezairo 7100 and the RSL10 to be updated to the latest Pre Suite versions using Sound Designer/SDK. It leaves the debug port of Ezairo 7100 in Restricted Mode.

For customers using the Ezairo 7160 SL as an open−programmable device, it is possible to erase the default application and replace it with your own firmware image for both the Ezairo 7100 and the RSL10. For the Ezairo 7100, this can be done using the Ezairo 7100 IDE or in a script using the Jump ROM functions "Wipe" and "Unlock" to place the device in Unrestricted Mode. Refer to the Communication Protocols Manual for Ezairo 7100 for more information. For the RSL10, ON Semiconductor has developed a utility that erases the Pre Suite application and unlocks the RSL10. Please contact your ON Semiconductor sales representative to access this utility.

Frequency Response Graph

Conditions

SYS_CLK = 10.24 MHz

Firmware: Simple FIFO copy application

Gain normalized to 0 dB at 1 kHz

Measurements taken electrically with a two−pole RC filter on the output with a cutoff frequency (−3 dB point) of 8 kHz. From 2 kHz to 8 kHz, the roll−off is due to the RC filter.

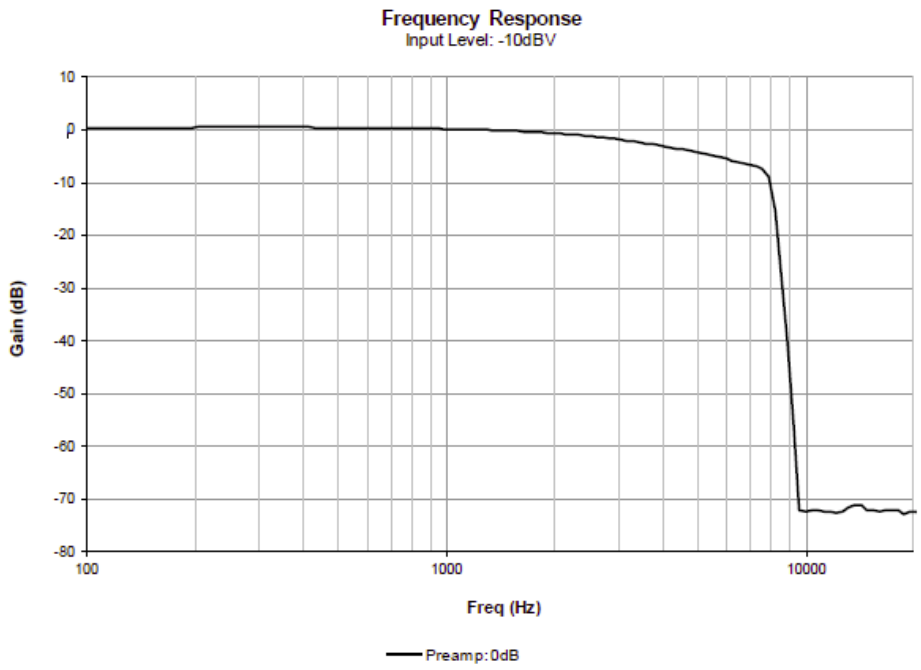

Figure 6. Frequency Response Graph

RSL10 Architecture Overview

Information on the RSL10 architecture can be found on the RSL10 datasheet available on www.onsemi.com

Chip Identification

System identification is used to identify different system components.

For the Ezairo 7100, this information can be retrieved using the Promira™ Serial Platform from TotalPhase, Inc. or the Communications Accelerator Adaptor (CAA) with the protocol software provided by ON Semiconductor. The key identifier components and values are as follows:

- Chip Family: 0x06
- Chip Version: 0x01
- Chip Revision: 0x0200

For the RSL10 chip, the key identifier components and values are as follows:

- Chip Family: 0x09
- Chip Version: 0x01
- Chip Revision: 0x01

The hybrid ID can be found in the manufacturing area of the EEPROM at address 0x00F1 to 0x00F2 (2 bytes => 16 bits).Similar to the Ezairo 7100 information, the hybrid ID can be retrieved using a programming interface.

- Hybrid ID: –0x03C0: for OPN E7160–0–102A57–AG
  –0x13C0: for OPN E7160–0P–102A57–AG

Solder Information

The Ezairo 7160 SL hybrid is constructed with RoHS compliant material with bump metallization of SAC305 (Sn96.5/Ag3.0/Cu0.5) solder.

This device is moisture sensitive, J–STD–020 Class MSL4, with peak soldering temperature of 240°C. For necessary storage, handling, and soldering instruction, please refer to the soldering and mounting techniques reference manual (SOLDERM/D, available on line), Chapter: How to Store, Reflow and Solder ON Semiconductor Hybrids.

The furnace profile shown in Figure 7 was used to confirm the device compatibility with lead free reflow. Note: The maximum component body reflow temperature for this device is 240°C.

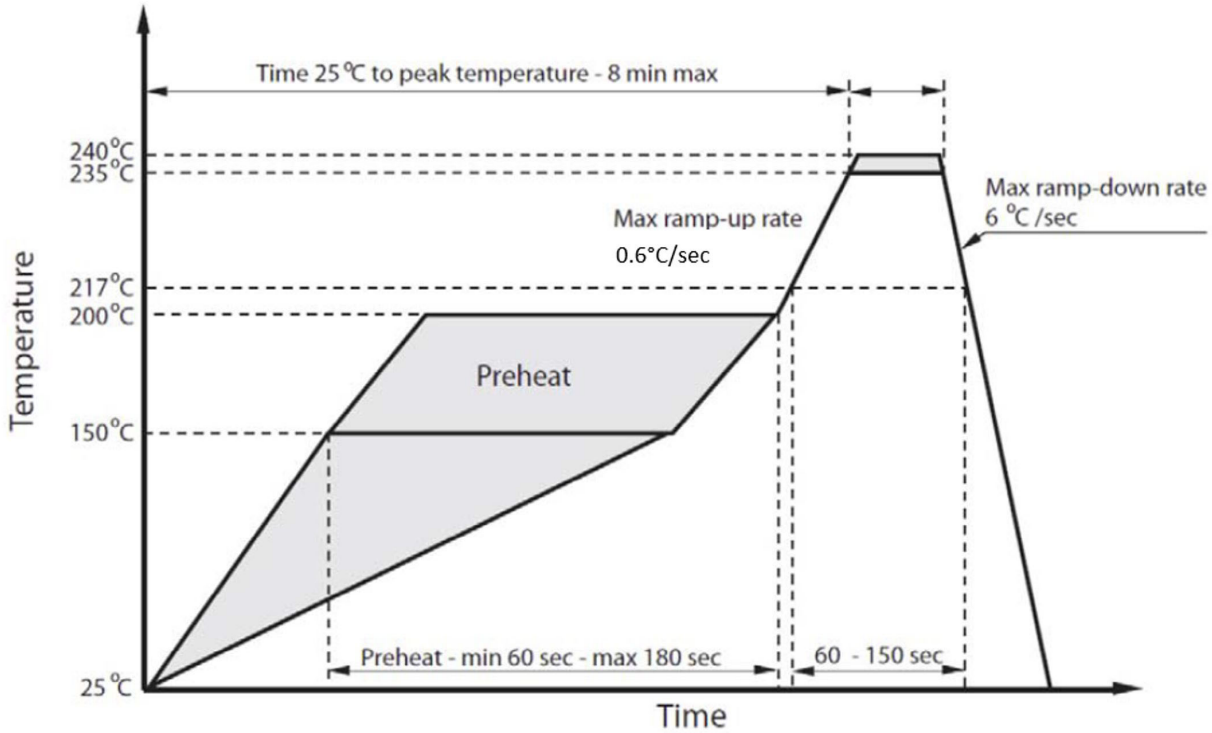

Figure 7. Typical Re−flow Profile

Tape & Reel Information

Electrostatic Discharge (ESD) Device

CAUTION: ESD sensitive device. Permanent damage may occur on devices subjected to high−energy electrostatic discharges. Proper ESD precautions in handling, packaging and testing are recommended to avoid performance degradation or loss of functionality.

Development Tools

For more information about which development tools best suit your application, contact your local sales representative or authorized distributor.

Tape and Reel and package information

Informations about the Tape and Reel used for the Ezairo 7160 SL (SIP57) can be found in the ON Semiconductor document BRD8011−D.PDF, available on−line.

Communication Libraries

Communication libraries are available to support Unidirectional Stereo Audio streaming from a remote streamer to the hearing aid using Ezairo 7160 SL. While audio is streamed to the hearing aids, the user is able to control the hearing device from a smartphone.

Company or Product Inquiries

For more information about ON Semiconductor products or services visit our web site at http://onsemi.com.

Technical Contact Information

dsp.support@onsemi.com

Datasheet Document Classification: Advanced Information Datasheet

The Advance Information document is for a device that is NOT fully qualified, but is in the final stages of the release process, and for which production is eminent. While the commitment has been made to produce the device, final characterization and qualification may not be complete. The Advance Information document is replaced with the “Fully Released Technical Data” document once the device/part becomes fully qualified. The Advance Information document displays the following disclaimer at the bottom of the first page: “This document contains information on a new product. Specifications and information herein are subject to change without notice.”

EZAIRO is a registered trademark of Semiconductor Components Industries, LLC. NOAHlink is a trademark of HIMSA A/S.
Bluetooth is a registered trademark of Bluetooth SIG, Inc. Arm and Cortex are registered trademarks of Arm Limited.
Promira is a trademark of Total Phase, Inc.

SIP57 6.80x3.94
CASE 127EX
ISSUE A

DATE 11 DEC 2018

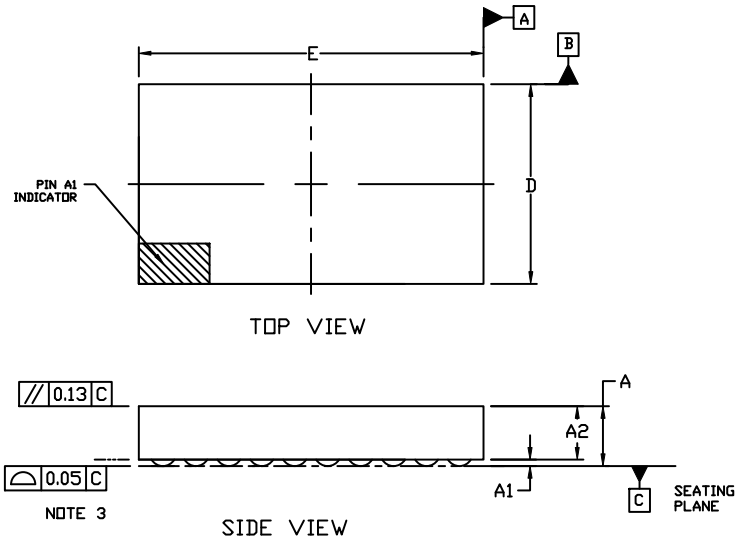

NOTES:

1. DIMENSIONING AND TOLERANCING PER ASME Y14.5M, 1994.
2. CONTROLLING DIMENSION: MILLIMETERS
3. COPLANARITY APPLIES TO THE SPHERICAL CROWNS OF THE PADS.

DIM	MILLIMETERS MIN.	MAX.
A	---	1.275
A1	0.075	0.150
A2	1.025	1.125
b	0.300	0.400
D	3.815	4.065
E	6.675	6.925
e	0.650 BSC	

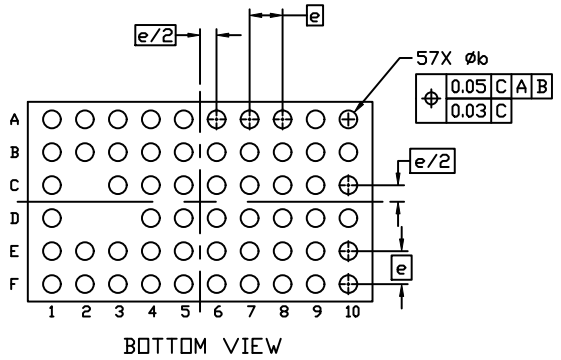

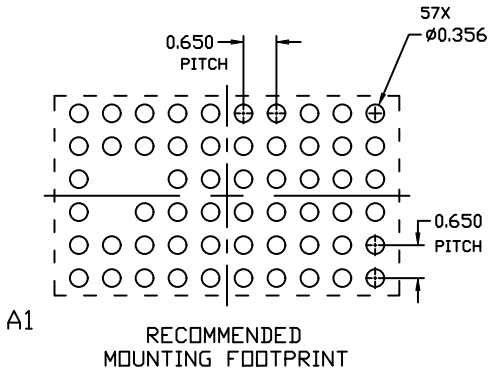

GENERIC
MARKING DIAGRAM*

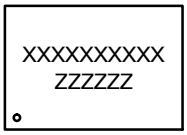

XXXX = Specific Device Code
ZZZ = Assembly Lot Code

*This information is generic. Please refer to device data sheet for actual part marking. Pb−Free indicator, “G” or microdot “▪”, may or may not be present. Some products may not follow the Generic Marking.

DOCUMENT NUMBER:	**98AON80926G**	Electronic versions are uncontrolled except when accessed directly from the Document Repository. Printed versions are uncontrolled except when stamped “CONTROLLED COPY” in red.
DESCRIPTION:	**SIP57 6.80x3.94**	**PAGE 1 OF 1**

ON Semiconductor and ON are trademarks of Semiconductor Components Industries, LLC dba ON Semiconductor or its subsidiaries in the United States and/or other countries. ON Semiconductor reserves the right to make changes without further notice to any products herein. ON Semiconductor makes no warranty, representation or guarantee regarding the suitability of its products for any particular purpose, nor does ON Semiconductor assume any liability arising out of the application or use of any product or circuit, and specifically disclaims any and all liability, including without limitation special, consequential or incidental damages. ON Semiconductor does not convey any license under its patent rights nor the rights of others.

© Semiconductor Components Industries, LLC, 2018

ON Semiconductor and ON are trademarks of Semiconductor Components Industries, LLC dba ON Semiconductor or its subsidiaries in the United States and/or other countries. ON Semiconductor owns the rights to a number of patents, trademarks, copyrights, trade secrets, and other intellectual property. A listing of ON Semiconductor's product/patent coverage may be accessed at www.onsemi.com/site/pdf/Patent−Marking.pdf. ON Semiconductor reserves the right to make changes without further notice to any products herein. ON Semiconductor makes no warranty, representation or guarantee regarding the suitability of its products for any particular purpose, nor does ON Semiconductor assume any liability arising out of the application or use of any product or circuit, and specifically disclaims any and all liability, including without limitation special, consequential or incidental damages. Buyer is responsible for its products and applications using ON Semiconductor products, including compliance with all laws, regulations and safety requirements or standards, regardless of any support or applications information provided by ON Semiconductor. "Typical" parameters which may be provided in ON Semiconductor data sheets and/or specifications can and do vary in different applications and actual performance may vary over time. All operating parameters, including "Typicals" must be validated for each customer application by customer's technical experts. ON Semiconductor does not convey any license under its patent rights nor the rights of others. ON Semiconductor products are not designed, intended, or authorized for use as a critical component in life support systems or any FDA Class 3 medical devices or medical devices with a same or similar classification in a foreign jurisdiction or any devices intended for implantation in the human body. Should Buyer purchase or use ON Semiconductor products for any such unintended or unauthorized application, Buyer shall indemnify and hold ON Semiconductor and its officers, employees, subsidiaries, affiliates, and distributors harmless against all claims, costs, damages, and expenses, and reasonable attorney fees arising out of, directly or indirectly, any claim of personal injury or death associated with such unintended or unauthorized use, even if such claim alleges that ON Semiconductor was negligent regarding the design or manufacture of the part. ON Semiconductor is an Equal Opportunity/Affirmative Action Employer. This literature is subject to all applicable copyright laws and is not for resale in any manner.

PUBLICATION ORDERING INFORMATION

LITERATURE FULFILLMENT:
Email Requests to: orderlit@onsemi.com

ON Semiconductor Website: www.onsemi.com

TECHNICAL SUPPORT
North American Technical Support:
Voice Mail: 1 800−282−9855 Toll Free USA/Canada
Phone: 011 421 33 790 2910

Europe, Middle East and Africa Technical Support:
Phone: 00421 33 790 2910
For additional information, please contact your local Sales Representative

◊