Chip RC Networks

Type: **EZACT**
EZADT
EZAST/SS
EZANT

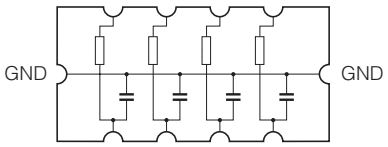

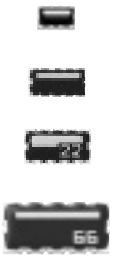

Type: **EZASTB/SSB**

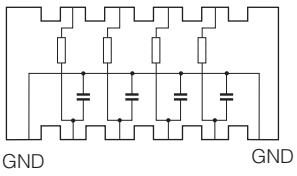



■ Features

Smallest SMD R/C networks

- 4 popular noise reduction circuits made
  EZACT : 2.0 mm × 1.2 mm × 0.6 mm, 0.5 mm pitch (Flat terminal type)
  EZADT : 3.2 mm × 1.6 mm × 0.65 mm, 0.635 mm pitch (Concave terminal type)
  EZAST/SS : 4.0 mm × 2.1 mm × 0.65 mm, 0.8 mm pitch (Concave terminal type)
  EZASTB/SSB : 4.0 mm × 2.1 mm × 0.65 mm, 0.65 mm pitch (Convex terminal type)
  EZANT : 6.4 mm × 3.1 mm × 0.80 mm, 1.27 mm pitch (Concave terminal type)

- Takes up less space than discrete chip resistor & chip capacitor
  EZACT:25 % of 0402 inches (1.0 mm × 0.5 mm) chips placing area
  EZADT:50 % of 0402 inches (1.0 mm × 0.5 mm) chips placing area
  EZAST/SS, EZASTB/SSB:70 % of 0402 inches (1.0 mm × 0.5 mm) chips placing area
  EZANT:55 % of 0805 inches (2.0 mm × 1.2 mm) chips placing area

<Effect of high density placing, PWB space saving>

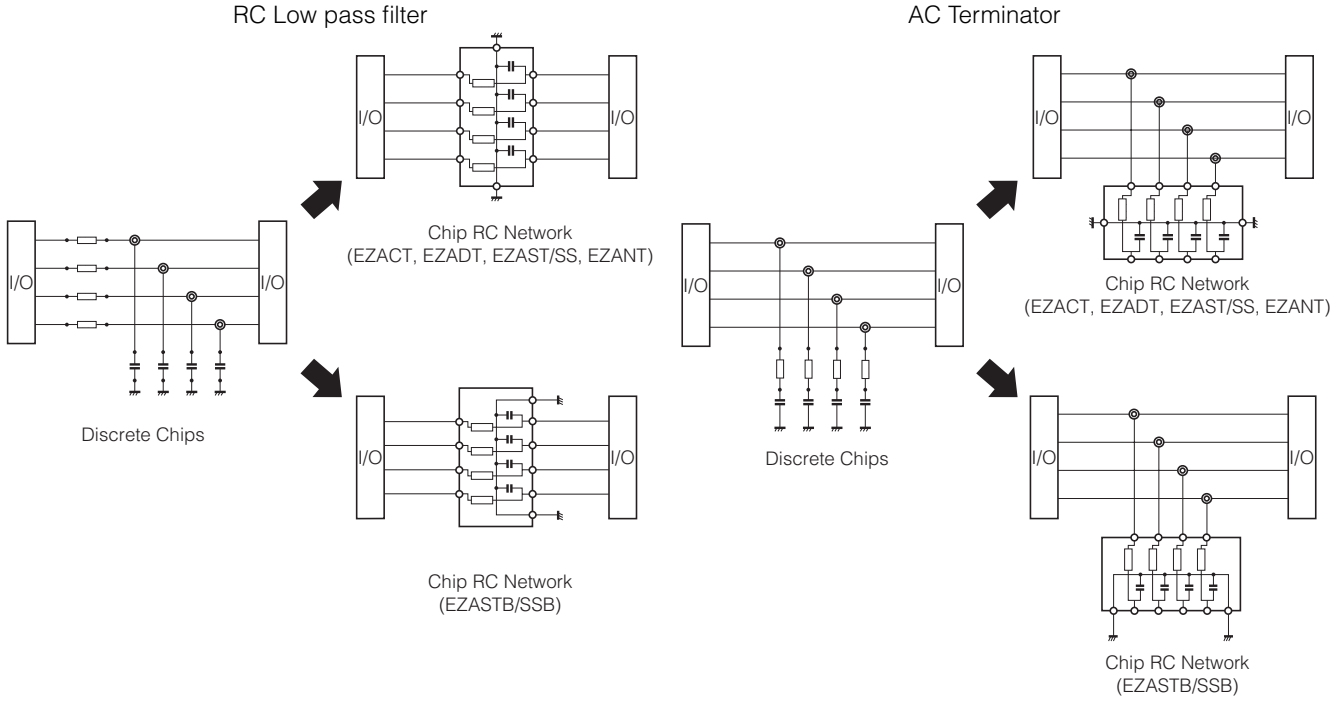

■ Recommended Applications

- Digital equipment such as PCs, printers, HDD, PCMCIA cards, PDAs, and word processors
- Communication equipment, digital cordless phones, automobile phones, GSM, PHS, DECT
- Digital audio and video equipment
- Electronic musical instruments, and other digital devices

Design and specifications are each subject to change without notice. Ask factory for the current technical specifications before purchase and/or use.
Should a safety concern arise regarding this product, please be sure to contact us immediately.

■ Explanation of Part Numbers

● EZACT (R/C Standard Combination)

1	2	3	4	5	6	7	8	9	10	11	12
E	Z	A	C	T	3	0	A	A	A	J	

- 1–3: Common Code — Thick Film Noise Suppression and Filtering Components
- 4–5: Dimension and Circuit Configuration

CT	2.0 mm ×1.2 mm	Chip RC Networks

- 6–7: R/C Standard Combination

Resistance Value Configuration		Capacitance Value Configuration	
0	10 Ω	0	10 pF
1	22 Ω	1	22 pF
2	47 Ω		
3	100 Ω		
4	220 Ω		
5	470 Ω		
6	1 k Ω		

- 8–10: Design Configuration

AAA	Standard

- 11: Resistance Tolerance

J	±5 %

- 12: Suffix for Special Requirement

● EZADT • EZAST • EZANT (R/C Standard Combination)

1	2	3	4	5	6	7	8	9	10	11	12
E	Z	A	S	T	3	3	A	A	A	J	

- 1–3: Common Code — Thick Film Noise Suppression and Filtering Components
- 4–5: Dimension and Circuit Configuration

DT	3.2 mm ×1.6 mm	Chip RC Networks
ST	4.0 mm ×2.1 mm	
NT	6.4 mm ×3.1 mm	

- 6–7: R/C Standard Combination

Resistance Value Configuration		Capacitance Value Configuration ✻	
1	22 Ω	1	22 pF
2	47 Ω	2	47 pF
3	100 Ω	3	100 pF
4	220 Ω	4	220 pF
5	470 Ω	5	470 pF
6	1 k Ω	6	1000 pF

- 8–10: Design Configuration

AAA	Standard

- 11: Resistance Tolerance

J	±5 %

- 12: Suffix for Special Requirement

✻ 220 pF to 1000 pF available for EZANT, 22 pF to 100 pF available for EZAST, EZADT

● EZACT • EZADT • EZASS • EZANT (R/C Except the standard Combination)

1	2	3	4	5	6	7	8	9	10	11	12
E	Z	A	S	S	7	0	1	Y	A	J	

- 1–3: Common Code — Thick Film Noise Suppression and Filtering Components
- 4–5: Dimension and Circuit Configuration

CT	2. 0 mm ×1.2 mm	Chip RC Networks
DT	3.2 mm ×1.6 mm	
SS	4.0 mm ×2.1 mm	
NT	6.4 mm ×3.1 mm	

- 6–8: Design Number

CT	Resistance Value : 10 Ω to 100 kΩ Capacitance Value : 10 pF to 33 pF In above-mentioned range, it is possible to choose optional R/C.
DT	Resistance Value : 10 Ω to 100 kΩ Capacitance Value : 10 pF to 100 pF In above-mentioned range, it is possible to choose optional R/C.
SS	Resistance Value : 10 Ω to 100 kΩ Capacitance Value : 10 pF to 180 pF In above-mentioned range, it is possible to choose optional R/C.
NT	Resistance Value : 10 Ω to 100 kΩ Capacitance Value : 220 pF to 1000 pF In above-mentioned range, it is possible to choose optional R/C.

- 11: Resistance Tolerance

J	±5 %

- 12: Suffix for Special Requirement

● EZASTB (R/C Standard Combination)

1	2	3	4	5	6	7	8	9	10	11	12
E	Z	A	S	T	B	3	3	A	A	J	

- 1–3: Common Code — Thick Film Noise Suppression and Filtering Components
- 4–6: Dimension and Circuit Configuration

STB	4.0 mm ×2.1 mm	Convex terminal type Chip RC Networks

- 7–8: R/C Standard Combination

Resistance Value Configuration		Capacitance Value Configuration	
1	22 Ω	1	22 pF
2	47 Ω	2	47 pF
3	100 Ω	3	100 pF
4	220 Ω		
5	470 Ω		
6	1 k Ω		

- 9–10: Design Configuration

AA	Standard

- 11: Resistance Tolerance

J	±5 %

- 12: Suffix for Special Requirement

Design and specifications are each subject to change without notice. Ask factory for the current technical specifications before purchase and/or use.
Should a safety concern arise regarding this product, please be sure to contact us immediately.

■ Explanation of Part Numbers

● EZASSB (R/C Except the standard Combination)

1	2	3	4	5	6	7	8	9	10	11	12
E	Z	A	S	S	B	7	0	1	A	J	

- 1–3: Common Code — Thick Film Noise Suppression and Filtering Components
- 4–6: Dimension and Circuit Configuration — SSB: 4.0 mm × 2.1 mm, Convex terminal type Chip RC Networks
- 7–10: Design Number — Resistance Value : 10 Ω to 100 kΩ; Capacitance Value : 10 pF to 180 pF; In above-mentioned range, it is possible to choose optional R/C.
- 11: Resistance Tolerance — J: ±5 %
- 12: Suffix for Special Requirement

■ Construction

EZACT

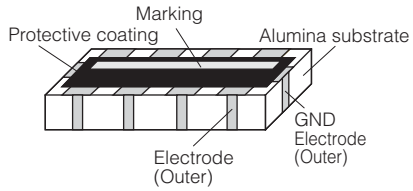

EZADT

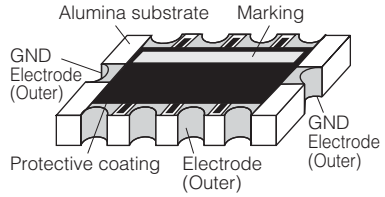

EZAST/SS

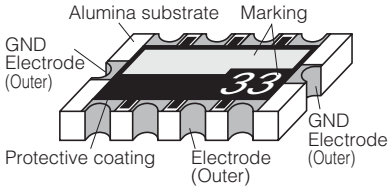

EZANT

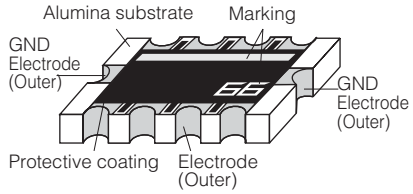

EZASTB/SSB

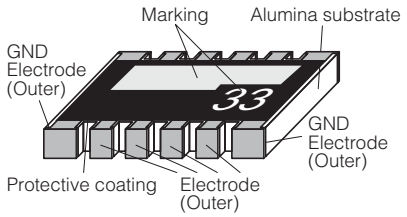

■ Circuit Configuration

EZACT

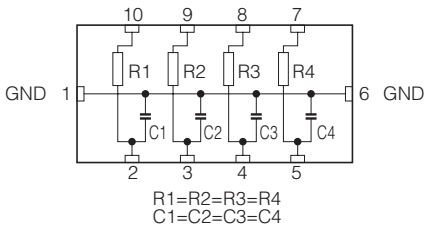

EZADT • EZAST/SS • EZANT

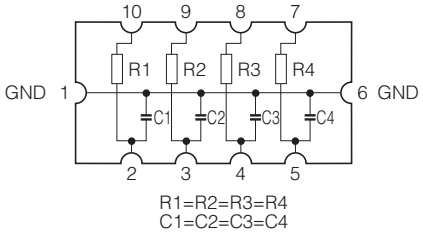

EZASTB/SSB

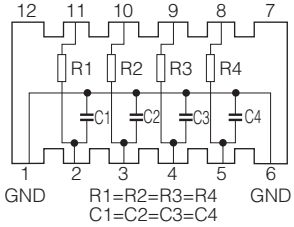

Design and specifications are each subject to change without notice. Ask factory for the current technical specifications before purchase and/or use.
Should a safety concern arise regarding this product, please be sure to contact us immediately.

■ Dimensions in mm(not to scale)

EZACT

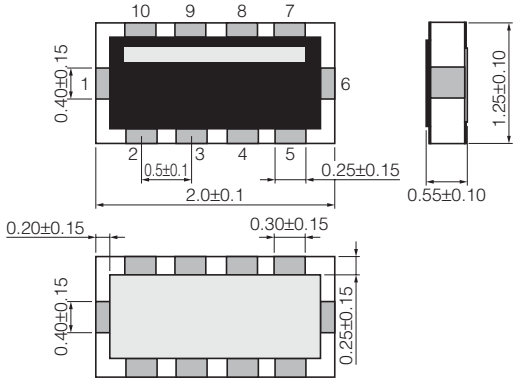

Size : 0805 inches
Mass (Weight) [1000 pcs.] :4 g

EZADT

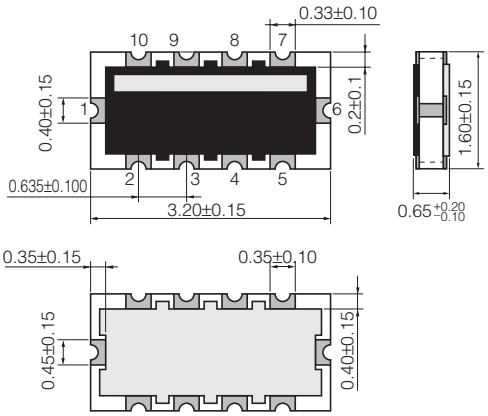

Size : 1206 inches
Mass (Weight) [1000 pcs.] :11 g

EZAST/SS

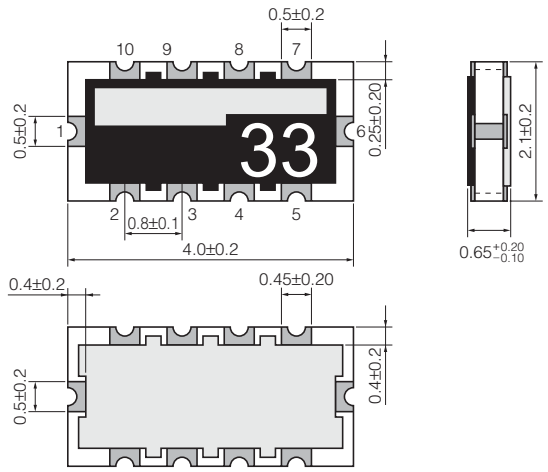

Size : 1608 inches
Mass (Weight) [1000 pcs.] :17 g

EZANT

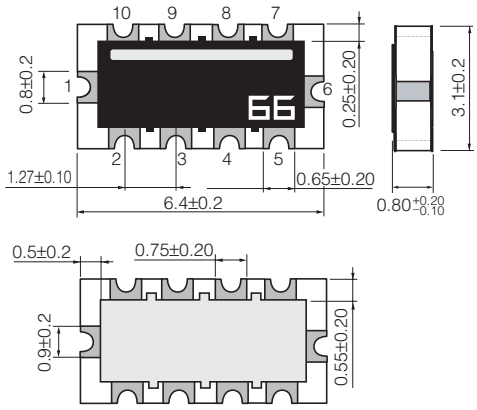

Size : 2512 inches
Mass (Weight) [1000 pcs.] :55 g

EZASTB/SSB

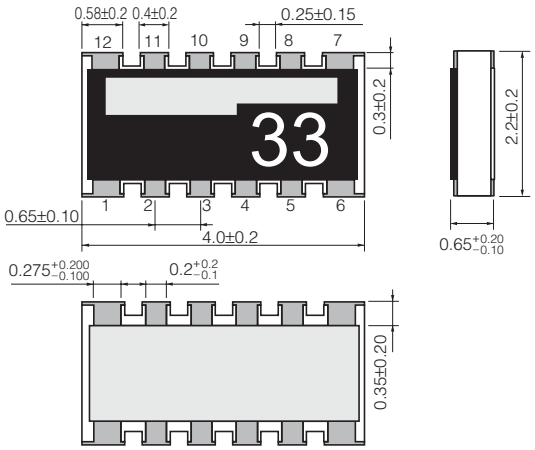

Size : 1608 inches
Mass (Weight) [1000 pcs.] :18 g

Design and specifications are each subject to change without notice. Ask factory for the current technical specifications before purchase and/or use.
Should a safety concern arise regarding this product, please be sure to contact us immediately.

■ Ratings

	Item	Specification
Resistor	Resistance Values	10 Ω to 100 kΩ EZAC Standard : 10 Ω, 22 Ω, 47 Ω, 100 Ω, 220 Ω, 470 Ω, 1 kΩ EZAD/S/N Standard : 22 Ω, 47 Ω, 100 Ω, 220 Ω, 470 Ω, 1 kΩ
	Resistance Tolerance	±5 %
	Temperature Coefficient of Resistance (T.C.R.)	±200 × 10^{-6}/°C(ppm/°C)
	Rated Power	EZAC : 0.031 W(≦70 °C(1)) EZAD/S/N : 0.063 W(≦70 °C(1))
	Limiting Element Voltage (Maximum Rated Continuous Working Voltage)	25 V(2)
Capacitor	Capacitance Values (25 °C, 1 kHz(3), 1 Vrms)	EZAC : 10 pF to 33 pF Standard : 10 pF, 22 pF EZAD : 10 pF to 100 pF EZAS : 10 pF to 180 pF Standard : 22 pF, 47 pF, 100 pF EZAN : 220 pF to 1000 pF Standard : 220 pF, 470 pF, 1000 pF
	Capacitance Tolerance	+30 %/–20 %
	Capacitance Temperature Characteristics	E Characteristic: +20 %/–55 %(–25 to +85 °C)
	Dissipation Factor	Less than 3 %(25, 1 kHz(3), 1 Vrms)
	Rated Voltage	EZAC, EZAD : 12 V EZAS : 25 V EZAN : 50 V
	Category Temperature Range (Operating Temperature Range)	–25 °C to +85 °C

(1) For resistors operated in ambient temperature above 70 °C, rated power shall be derated. ("Power Derating Curve" is shown below)
(2) Rated Voltage for resistor shall be determined from $\sqrt{\text{Rated Power} \times \text{Resistance Value}}$, or Limiting Element Voltage (Max. Rated Continuous Working Voltage) whichever less.
(3) In measuring at 1 MHz, Capacitance and Dissipation Factor are different.

Power Derating Curve

For resistors operated in ambient temperatures above 70 °C, power rating shall be derated in accordance with the figure on the right.

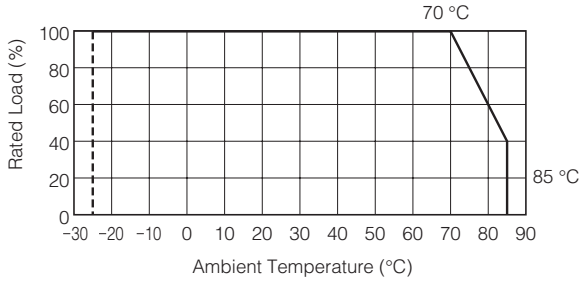

■ Attenuation Characteristics

●EZACT

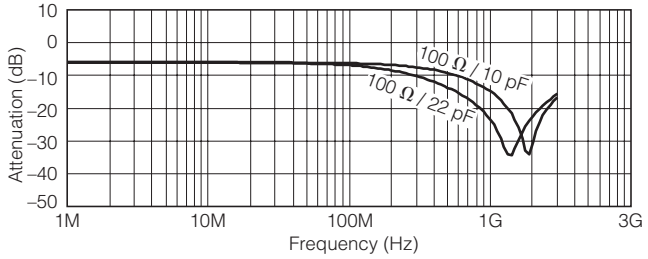

●EZADT

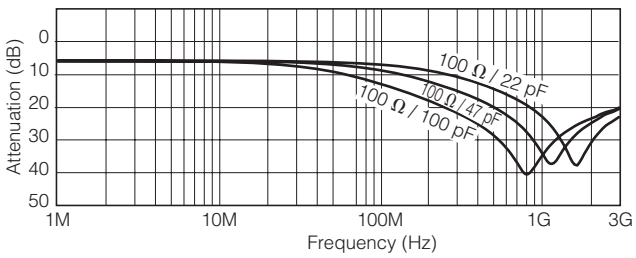

●EZST • EZASTB

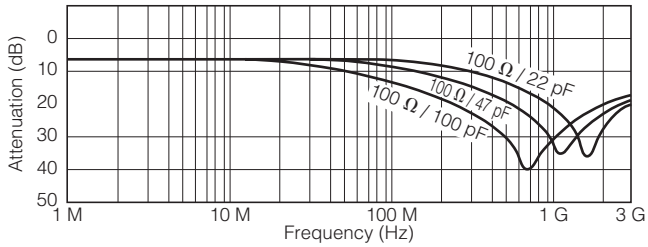

●EZANT

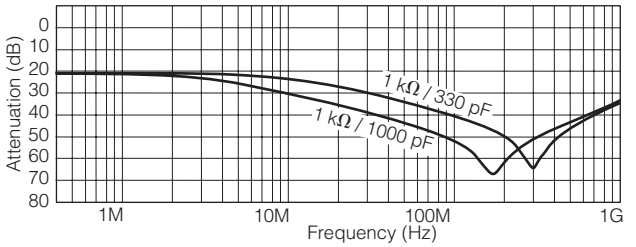

Measurement Circuit

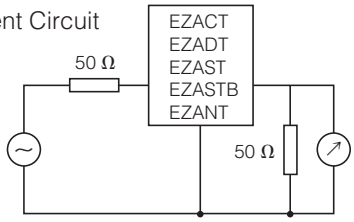

Design and specifications are each subject to change without notice. Ask factory for the current technical specifications before purchase and/or use.
Should a safety concern arise regarding this product, please be sure to contact us immediately.

■ Packaging Methods (Taping)

● Standard Quantity

Type	Kind of Taping	Pitch (P_1)	Quantity
EZACT	Punched Carrier Taping	4 mm	5000 pcs./reel
EZADT			
EZAST/SS	Embossed Carrier Taping		4000 pcs./reel
EZASTB/SSB			
EZANT			

● Carrier Tape

(Unit : mm)

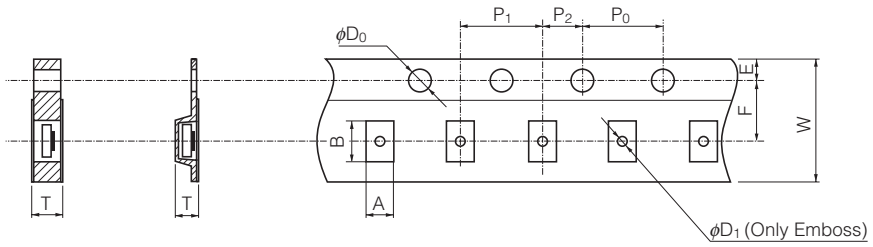

Type	A	B	W	F	E	P_1	P_2	P_0	ϕD_0	T	ϕD_1
EZACT	$1.65^{\pm0.15}$	$2.40^{\pm0.20}$	$8.00^{\pm0.20}$	$3.50^{\pm0.05}$	$1.75^{\pm0.10}$	$4.00^{\pm0.10}$	$2.00^{\pm0.05}$	$4.00^{\pm0.10}$	$1.50^{+0.10}_{-0}$	$0.85^{\pm0.05}$	—
EZADT	$2.00^{\pm0.20}$	$3.60^{\pm0.20}$									
EZAST/SS	$2.50^{\pm0.20}$	$4.40^{\pm0.20}$	$12.00^{\pm0.30}$	$5.50^{\pm0.20}$	$1.75^{\pm0.20}$					$1.15^{\pm0.20}$	$1.50^{+0.10}_{-0}$
EZASTB/SSB											
EZANT	$3.50^{\pm0.20}$	$6.80^{\pm0.20}$								$1.30^{\pm0.20}$	

● Taping Reel

(Unit : mm)

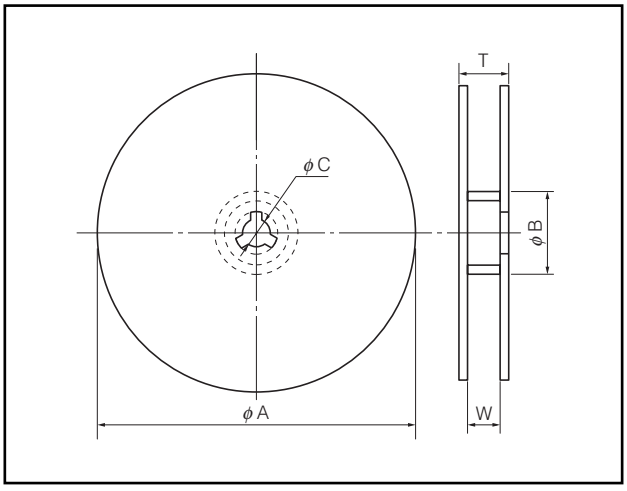

Type	ϕA	ϕB	ϕC	W	T
EZACT	$180.0^{+0}_{-3.0}$	60 min.	$13.0^{\pm1.0}$	$9.0^{\pm1.0}$	$11.4^{\pm2.0}$
EZADT					
EZAST/SS				$13.0^{\pm1.0}$	$15.4^{\pm2.0}$
EZASTB/SSB					
EZANT					

Design and specifications are each subject to change without notice. Ask factory for the current technical specifications before purchase and/or use.
Should a safety concern arise regarding this product, please be sure to contact us immediately.

■ Recommended Land Pattern Design

●EZACT

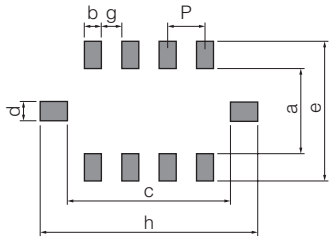

Land pattern

	a	b	c	d
Dimensions (mm)	0.75	0.25	1.70	0.35

	e	h	g	P
Dimensions (mm)	1.85	2.60	0.25	0.60

●EZADT

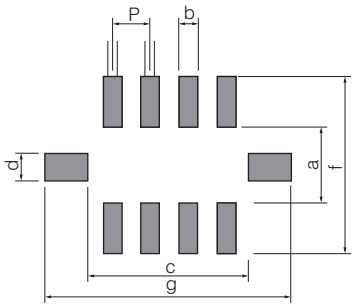

Land pattern

	a	b	c	d
Dimensions (mm)	0.9 to 1.1	0.2 to 0.3	2.6 to 2.8	0.3 to 0.4

	f	g	P
Dimensions (mm)	2.0 to 2.6	3.6 to 4.2	0.635

●EZAST/SS

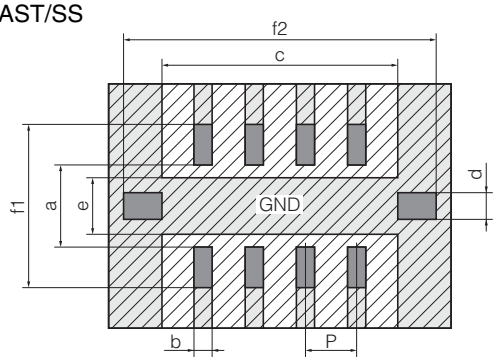

Solder resistant

Land pattern

	a	b	c	d
Dimensions (mm)	1.2 to 1.4	0.4	3.1 to 3.3	0.4 to 0.5

	e	f1	f2	P
Dimensions (mm)	0.8	2.9 to 3.3	4.8 to 5.2	0.8

●EZASTB/SSB

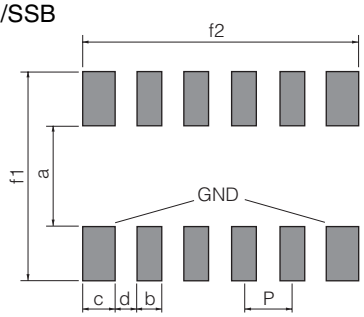

Land pattern

	a	b	c	d
Dimensions (mm)	1.4 to 1.6	0.35	0.45	0.3

	f1	f2	P
Dimensions (mm)	2.7 to 3.5	3.8	0.65

●EZANT

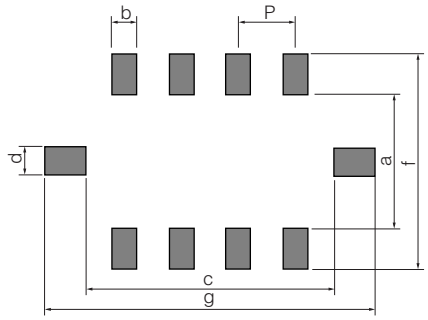

Land pattern

	a	b	c	d
Dimensions (mm)	2.3 to 2.5	0.4 to 0.6	5.6 to 5.8	0.4 to 0.8

	f	g	P
Dimensions (mm)	4.3 to 4.7	7.6 to 8.0	1.27

• Design to make GND pattern as large as possible, because high frequency noise is removed from GND terminals of chip RC network.

Design and specifications are each subject to change without notice. Ask factory for the current technical specifications before purchase and/or use.
Should a safety concern arise regarding this product, please be sure to contact us immediately.

■ Recommended Soldering Conditions

Recommendations and precautions are described below.

● Recommended soldering conditions for reflow

·Reflow soldering shall be performed a maximum of two times.
·Please contact us for additional information when used in conditions other than those specified.
·Please measure the temperature of the terminals and study every kind of solder and printed circuit board for solderability before actual use.

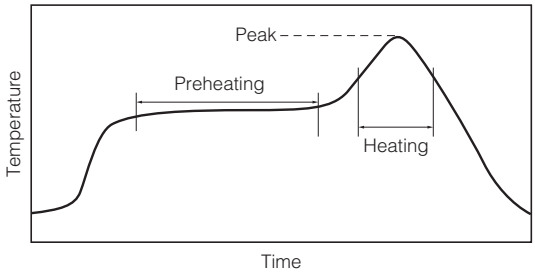

For soldering (Example : Sn/Pb)

	Temperature	Time
Preheating	140 °C to 160 °C	60 s to120 s
Main heating	Above 200 °C	30 s to 40 s
Peak	235 ± 5 °C	max. 10 s

For lead-free soldering (Example : Sn/Ag/Cu)

	Temperature	Time
Preheating	150 °C to 180 °C	60 s to 120 s
Main heating	Above 230 °C	30 s to 40 s
Peak	max. 260 °C	max. 10 s

This product has circuits on both sides. Therefore, do not use adhesives because they may impair the products characteristics.

● Flow Soldering

We do not recommend flow soldering to the product, because solder bridging may occur due to the narrow pitch of the terminals and the characteristics of the product may be badly affected when using adhesive to affix it to a circuit board.

⚠Safety Precautions

The following are precautions for individual products. Please also refer to the precautions common to EMI Filters, Fuses, and Sensors(MR Elements) shown on page EX2 of this catalog.

1. Take measures against mechanical stress during and after mounting of Chip RC Networks (hereafter called the RC networks) so as not to damage their electrodes and protective coatings.
   Be careful not to misplace the RC networks on the land patterns. Otherwise, solder bridging may occur.
2. Do not use halogen-based or other high-activity flux. Otherwise, the residue may impair the RC networks' performance and/or reliability.
3. Perform sufficient preheating so that the difference of the solder temperature and the RC networks chip surface temperature becomes 100 °C or less. Maintain the temperature difference within 100 °C during rapid cooling by immersion into solvent after soldering.
4. When soldering with a soldering iron, never touch the RC networks' bodies with the tip of the soldering iron. When using a soldering iron with a high temperature tip, finish soldering as quickly as possible (within three seconds at 350 °C max.).
5. As the amount of applied solder becomes larger, the mechanical stress applied to the RC networks increases, causing problems such as cracks and faulty characteristics. Avoid applying an excessive amounts of solder.
6. Do not apply shock to the RC networks or pinch them with a hard tool (e.g. pliers and tweezers). Otherwise, the RC networks' protective coatings and bodies may be chipped, affecting their performance.
7. Avoid excessive bending of printed circuit boards in order to protect the RC networks from abnormal stress.
8. The static capacitance may decrease by a few percent from the time of shipment due to the characteristics peculiar to dielectric materials having a high dielectric constant.

Design and specifications are each subject to change without notice. Ask factory for the current technical specifications before purchase and/or use.
Should a safety concern arise regarding this product, please be sure to contact us immediately.

⚠Safety Precautions (Common precautions for EMI Filters, Fuses, and Sensors[MR Elements])

- When using our products, no matter what sort of equipment they might be used for, be sure to make a written agreement on the specifications with us in advance. The design and specifications in this catalog are subject to change without prior notice.
- Do not use the products beyond the specifications described in this catalog.
- This catalog explains the quality and performance of the products as individual components. Before use, check and evaluate their operations when installed in your products.
- Install the following systems for a failsafe design to ensure safety if these products are to be used in equipment where a defect in these products may cause the loss of human life or other significant damage, such as damage to vehicles (automobile, train, vessel), traffic lights, medical equipment, aerospace equipment, electric heating appliances, combustion/gas equipment, rotating equipment, and disaster/crime prevention equipment.

✻ Systems equipped with a protection circuit and a protection device
✻ Systems equipped with a redundant circuit or other system to prevent an unsafe status in the event of a single fault

(1) Precautions for use

- These products are designed and manufactured for general and standard use in general electronic equipment (e.g. AV equipment, home electric appliances, office equipment, information and communication equipment)
- These products are not intended for use in the following special conditions. Before using the products, carefully check the effects on their quality and performance, and determine whether or not they can be used.
  1. In liquid, such as water, oil, chemicals, or organic solvent
  2. In direct sunlight, outdoors, or in dust
  3. In salty air or air with a high concentration of corrosive gas, such as Cl_2, H_2S, NH_3, SO_2, or NO_2
  4. Electric Static Discharge (ESD) Environment
     These components are sensitive to static electricity and can be damaged under static shock (ESD).
     Please take measures to avoid any of these environments.
     Smaller components are more sensitive to ESD environment.
  5. Electromagnetic Environment
     Avoid any environment where strong electromagnetic waves exist.
  6. In an environment where these products cause dew condensation
  7. Sealing or coating of these products or a printed circuit board on which these products are mounted, with resin or other materials
- These products generate Joule heat when energized. Carefully position these products so that their heat will not affect the other components.
- Carefully position these products so that their temperatures will not exceed the category temperature range due to the effects of neighboring heat-generating components. Do not mount or place heat-generating components or inflammables, such as vinyl-coated wires, near these products (except Thermal Cutoffs).
- Note that non-cleaning solder, halogen-based highly active flux, or water-soluble flux may deteriorate the performance or reliability of the products.
- Carefully select a flux cleaning agent for use after soldering. An unsuitable agent may deteriorate the performance or reliability. In particular, when using water or a water-soluble cleaning agent, be careful not to leave water residues. Otherwise, the insulation performance may be deteriorated.

(2) Precautions for storage

The performance of these products, including the solderability, is guaranteed for a year from the date of arrival at your company, provided that they remain packed as they were when delivered and stored at a temperature of 5 °C to 35 °C and a relative humidity of 45 % to 85 %. (Micro Chip Fuses: Guaranteed for 6 months from the date of arrival at your company)
The performance of EMI Filters is guaranteed for 6 months or a year from the outgoing inspection date indicated on the packages, provided that they are stored at a temperature of -5 °C to +40 °C and a relative humidity of 40 % to 60 %. Check the guarantee period in the specifications. The performance of Thermal Cutoffs is guaranteed for a year from the outgoing inspection date indicated on the packages, provided that they are stored at a temperature of -10 °C to +40 °C and a relative humidity of 30 % to 75 %.

Even within the above guarantee periods, do not store these products in the following conditions. Otherwise, their electrical performance and/or solderability may be deteriorated, and the packaging materials (e.g. taping materials) may be deformed or deteriorated, resulting in mounting failures.

1. In salty air or in air with a high concentration of corrosive gas, such as Cl_2, H_2S, NH_3, SO_2, or NO_2
2. In direct sunlight

<Package markings>
Package markings include the product number, quantity, and country of origin.
In principle, the country of origin should be indicated in English.