IPPC-5211WS

21.5" Full HD TFT LED LCD Industrial Multi-Touch Panel PC with Stainless Steel Chassis and IP69K Rating

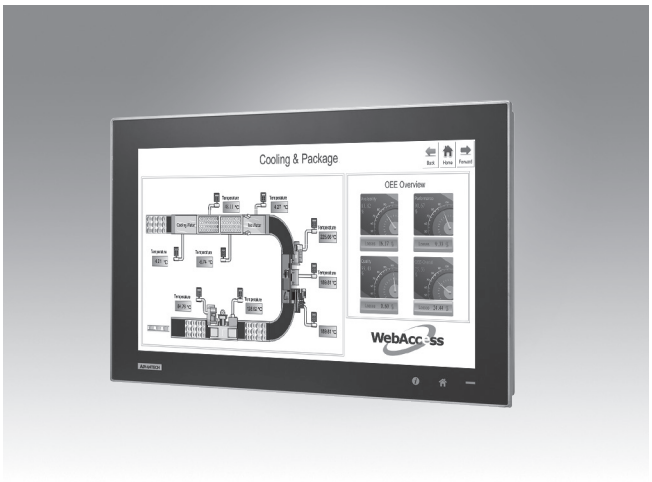

Features

- Stainless steel chassis with IP69K rating for dust and water ingress
- Full range of configurable accessories for diverse applications
- Intel® Celeron® J1900 processor
- 21.5" Full HD TFT LED LCD
- Wide operating temperature range (0 ~ 50 °C/32 ~ 122 °F)
- 16:9 widescreen aspect ratio with PCAP multi-touch control
- Supports iDoor or external antenna integration
- Built-in function key and home key for intuitive operation
- True-flat glass front panel with 7H hardness
- Fanless cooling system
- Front-facing LED indicators to show operating status
- Supports Advantech's SNMP Subagent software

Introduction

The IPPC-5211WS 21.5" fully sealed stainless steel multi-touch panel PC is IP69K rated and has a full range of modular accessories aimed at OEM and process manufacturing. With the inclusion of iDoor technology, iKey, and an external antenna, IPPC-5211WS supports special functions and can provide the superior performance and functionality required for machine-to-machine (M2M) and Internet of Things (IoT) applications. To ensure reliable operation in harsh environments, IPPC-5211WS is IP69K rated for protection from water and dust ingress. Moreover, the IPPC-5211WS system also supports one-touch shutdown to prevent unauthorized operation for improved security.

Specifications

General

- **BIOS** AMI UEFI
- **Certification** IP69k, CE, FCC Class A, UL, CCC, BSMI
- **Cooling System** Fanless design
- **Dimensions (W x H x D)** 555 x 346.5 x 81 mm (21.85 x 13.64 x 3.19 in)
- **Enclosure** Front: Stainless steel
  Back: Aluminum/stainless steel (optional)
- **Mounting** VESA and flange adapter for arm and foot system
- **Power Consumption** 40.8 W
- **Power Input** 21~27 V_{DC}
- **Weight** 15.8 kg (34.83 lb)
- **OS Support** Microsoft® WES7 (32/64-bit), Windows 7 (32/64-bit), Windows Embedded 8.1 Industry Pro (64-bit) Windows 10 Enterprise LTSB

System Hardware

- **CPU** Intel® Celeron Processor J1900
- **Memory** 4 GB DDR3L SODIMM (up to 8 GB)
- **LAN** RTL8111E-VL-CG
- **Expansion Slots** 1 x Full-size mini PCIe x1
- **Storage** 1 x CFast
  1 x 2.5" SATA (default) or CFast (optional)
- **I/O** 2 x 10/100/1000 Mbps RJ45
  1 x RS-232
  1 x RS-232/RS-485/RS-422
  1 x USB 2.0
  1 x USB 3.0
  1 x Waterproof wireless antenna (optional)

LCD

- **Display Type** Full HD TFT LED LCD
- **Display Size** 21.5"
- **Max. Resolution** 1920 x 1080
- **Max. Colors** 16.7M
- **Luminance (cd/m²)** 300
- **Viewing Angle(H/V)** 178 / 178
- **Backlight Life** 50,000 hr

Touchscreen

- **Light Transmission** ≧88%
- **Resolution** 4096 x 4096 dpi
- **Type** Projected capacitive

Environment

- **Humidity** 10 ~ 95% RH @ 40 °C, non-condensing
  Note: Tested for 48 hr
- **Operating Temperature** 0 ~ 50 °C (32 ~ 122 °F)
- **Storage Temperature** -20 ~ 60 °C (-4 ~ 140 °F)
- **Vibration Protection** With HDD: 1 Grms (5~500Hz)
  (Operating, random vibration)

Ordering Information

- **IPPC-5211WS-J3AE** 21" Panel PC w/ Alum. Rear Cover, J1900 (Partial Stainless Steel Housing Version)
- **IPPC5211WSJ1501E-T** 21" Panel PC w/ Stainless Steel Rear Cover, J1900 (All Stainless Steel version)

iDoor Modules

- **PCM-24D2R4-AE** 2-Port Isolated RS-422/485 mPCIe, DB9
- **PCM-24D2R2-AE** 2-Port Isolated RS-232 mPCIe, DB9
- **PCM-27D24DI-AE** 24-Channel Isolated Digital I/O w/ counter mPCIe, DB37
- **PCM-26R2PN-MAE** 2-Port Hilscher netX100 FieldBus mPCIe, PROFINET, RJ45, Master
- **PCM-26R2PN-SAE** 2-Port Hilscher netX100 FieldBus mPCIe, PROFINET, RJ45, Slave
- **PCM-26D1DB-MAE** 1-Port Hilscher netX100 FieldBus mPCIe, PROFIBUS, DB9, Master
- **PCM-26D1DB-SAE** 1-Port Hilscher netX100 FieldBus mPCIe, PROFIBUS, DB9, Slave

All product specifications are subject to change without notice.

Dimensions

Unit: mm [inch]

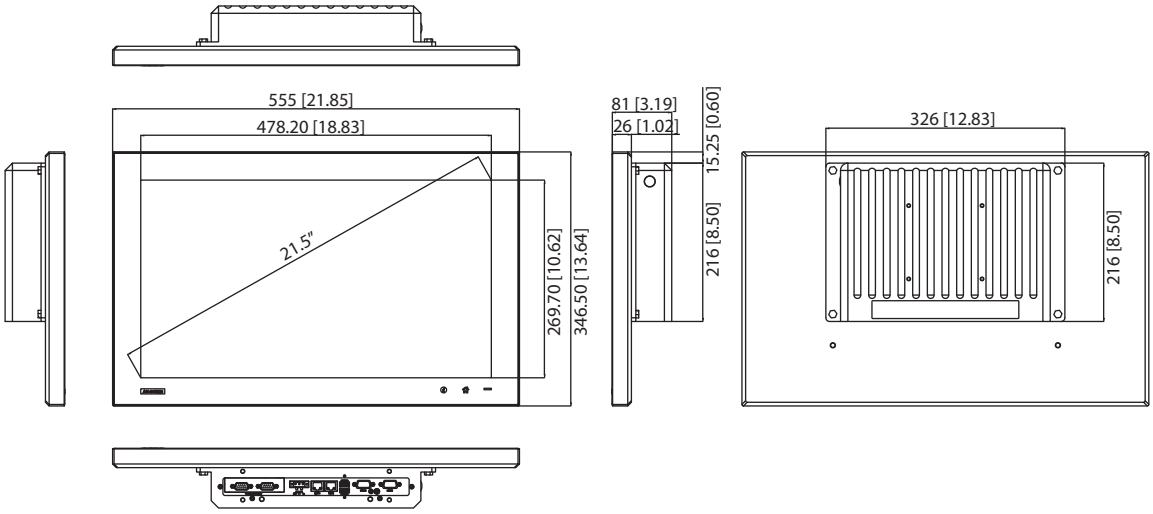

Optional Accessories

- **PWR-247-CE** 100-240V 60W 24V 2.5A Power Supply
- **2070013799** Image WS7P x64 MUI. v4.12 B001 for IPPC-5211WS
- **20703WX9ES0016** Img WIN10 LTSC v6.04 B044 IPPC-5211WS-JxAE Entry
- **IPPC-5211WS-EMKE** Aluminium Flange Adaptor of IPPC-5211 (To implement pole mount and enable all-around IP69k)
- **IPPC-5000-FLAE** 304L Stainless Steel Flange Adaptor of IPPC-5211 (To implement pole mount and enable all-around IP69k)
- **EWM-W151H01E** 802.11bgn RTL8188EE 1T1R, Half-size Mini-PCIe (also need 9656EWMG00E)
- **1750007668-01** Waterproof Wireless Antenna R/P SMA.M2dB L=86.7

Dimension of IPPC-5211WS-EMKE & IPPC-5000-FLAE

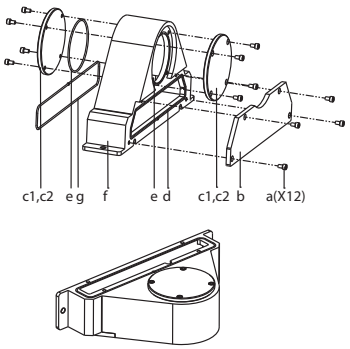

Rear View

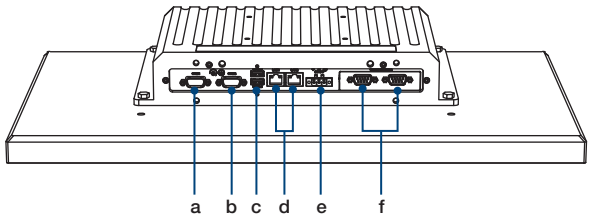

a. COM1 (RS-232)
b. COM2 (RS232/RS485/RS422)
c. 2 x USB (1 x USB 3.0, 1 x USB 2.0)
d. 2 x LAN (10/100/1000 Mbps)
e. Power input
f. iDoor

Product Type with IPPC-5211WS-EMKE

Arm System

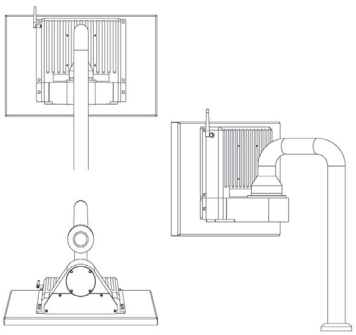

Foot System

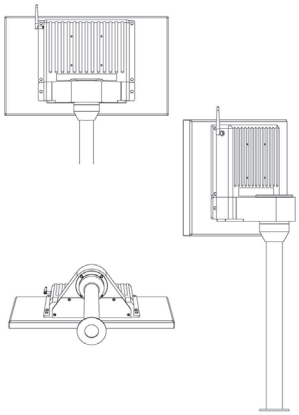

Please note: If some optional modules are offered with the system, additional system certificates may be required in certain regions/countries. Please contact Advantech for certificate compliance.