6 mm Square SMD Light Touch Switches

Type: **EVQQX**

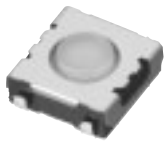

■ Features

- External dimensions: 6.2 mm×6.2 mm, Height 2.0 mm, 2.5 mm, 3.1 mm
- Reflow soldering
- Wide product variety

■ Recommended Applications

- Operation switches for portable electronic equipment (Camcorders, Portable audio players, etc.)
- Operating signal input switches for communication equipment.

■ Explanation of Part Numbers

1	2	3	4	5	6	7	8	9
E	V	Q	Q	X				
Product Code			Type			Height		Push Plate Color

■ Product Chart

Type with Push Plate	Soldering		Reflow soldering	
			Without sealing film	
	Packaging		Taping L=2.0, 2.5, 3.1 mm	
	Ground terminal		Without	With
Profile 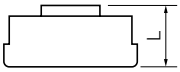	Operating Force	1.3 N	EVQQXP	EVQQXM
		1.6 N	EVQQXS	EVQQXN
		2.6 N	EVQQXT	EVQQXK

■ Specifications

Type			
		Snap action / Push-on type SPST	
Electrical	Rating	10 µA 2 Vdc to 20 mA 15 Vdc (Resistive load)	
	Contact Resistance	50 mΩ max.	
	Insulation Resistance	50 MΩ min. (at 100 Vdc)	
	Dielectric Withstanding Voltage	250 Vac for 1 minute	
	Bouncing	3 ms max. (ON) 8 ms max. (OFF)	
Mechanical	Operating Force	1.3 N±0.4 N 1.6 N±0.5 N	2.6 N± 0.6 N
	Travel	0.25 mm±0.10 mm	
Endurance	Operating Life	1000000 cycles min.	100000 cycles min.
Operating Temperature		−20 °C to +70 °C	
Storage Temperature		−40 °C to +85 °C (Bulk) −20 °C to +60 °C (Taping)	
Minimum Quantity/Packing Unit		H=2.0 mm	4000 pcs. Embossed Taping (Reel Pack)
		H=2.5 mm, 3.1 mm	2000 pcs. Embossed Taping (Reel Pack)
Quantity/Carton		H=2.0 mm	20000 pcs.
		H=2.5 mm, 3.1 mm	10000 pcs.

Note: Non washable

Design and specifications are each subject to change without notice. Ask factory for the current technical specifications before purchase and/or use.
Should a safety concern arise regarding this product, please be sure to contact us immediately.

■ Dimensions in mm (not to scale)

EVQQX

(Embossed Taping)

With push plate
Surface mount
For reflow soldering
With ground terminal
Without ground terminal

Notes:
1. Non-washable in solvents
2. Types with ground terminal available

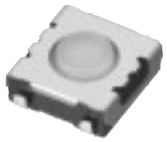

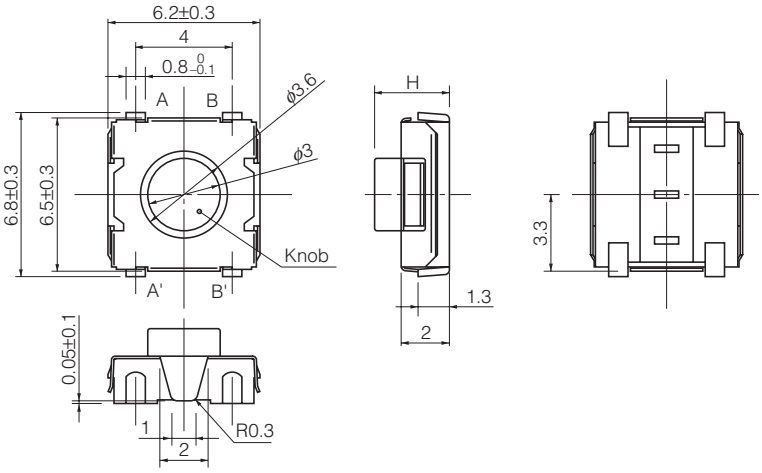

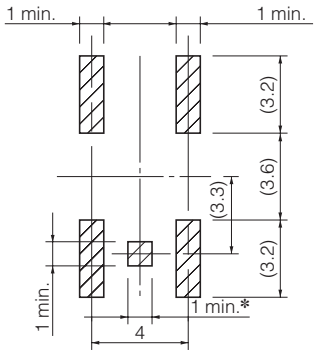

PWB land pattern for reference

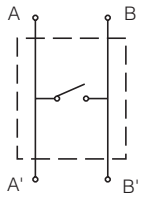

Circuit Diagram

Even though the ground terminal is not soldered the ground effect would be gained. However when soldering the ground terminal, do investigation sufficiently beforehand in the invasion of the flux. We recommend to connect the GND land shown in the switch spec with the GND of your P.W.B for withstanding electric static discharge.

✻ This land not necessary when a ground terminal is not used.

Height
H
2.0±0.2
2.5±0.2
$3.1^{+0.3}_{-0.1}$

Part Numbers	Ground Terminal	Operating Force	H=Height	Push Plate Color	Operating Life
EVQQXP01W	Without	1.3 N	2.0 mm	White	1000000 cycles
EVQQXP02W	Without	1.3 N	2.5 mm	White	1000000 cycles
EVQQXP03W	Without	1.3 N	3.1 mm	White	1000000 cycles
EVQQXS01W	Without	1.6 N	2.0 mm	White	1000000 cycles
EVQQXS02W	Without	1.6 N	2.5 mm	White	1000000 cycles
EVQQXS03W	Without	1.6 N	3.1 mm	White	1000000 cycles
EVQQXT01W	Without	2.6 N	2.0 mm	White	100000 cycles
EVQQXT02W	Without	2.6 N	2.5 mm	White	100000 cycles
EVQQXT03W	Without	2.6 N	3.1 mm	White	100000 cycles
EVQQXM01W	With	1.3 N	2.0 mm	White	1000000 cycles
EVQQXM02W	With	1.3 N	2.5 mm	White	1000000 cycles
EVQQXM03W	With	1.3 N	3.1 mm	White	1000000 cycles
EVQQXN01W	With	1.6 N	2.0 mm	White	1000000 cycles
EVQQXN02W	With	1.6 N	2.5 mm	White	1000000 cycles
EVQQXN03W	With	1.6 N	3.1 mm	White	1000000 cycles
EVQQXK01W	With	2.6 N	2.0 mm	White	100000 cycles
EVQQXK02W	With	2.6 N	2.5 mm	White	100000 cycles
EVQQXK03W	With	2.6 N	3.1 mm	White	100000 cycles

Design and specifications are each subject to change without notice. Ask factory for the current technical specifications before purchase and/or use.
Should a safety concern arise regarding this product, please be sure to contact us immediately.

■ Recommended Reflow Soldering Conditions

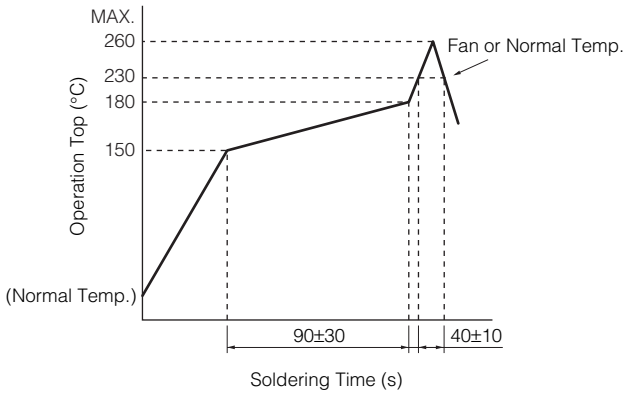

● Embossed Carrier Taping

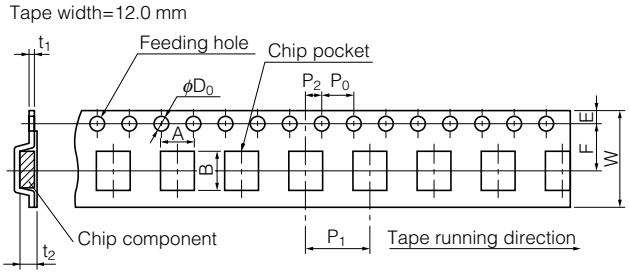

Unit: mm

Part No.	Height	A	B	W	F	E	P_1	P_2	P_0	D_0 Dia.	t_1	t_2
EVQQX	2.0	7.0±0.2	7.5±0.2	12.0±0.3	5.5±0.1	1.75±0.10	8.0±0.1	2.0±0.1	4.0±0.1	$1.5^{+0.1}_{-0}$	0.30±0.05	2.2±0.2
	2.5/3.1											3.2±0.2

● Standard Reel Dimensions in mm (not to scale)

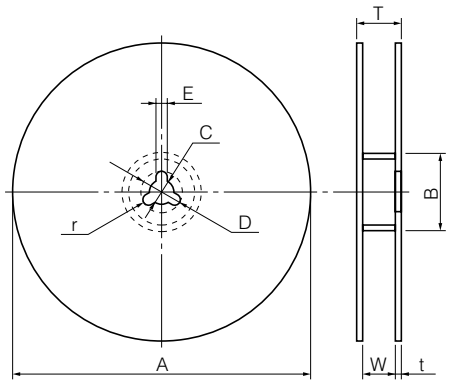

Item	A	B	C	D	E
Rate (mm)	φ370.0±2.0	φ50.0 min.	φ13.0±0.5	φ21.0±1.0	2.0±0.5

Item	W	T	t	r
Rate (mm)	14.0±1.5	—	1.0 to 3.0	1.0±0.5

■ Recommended Shape of Test Pole

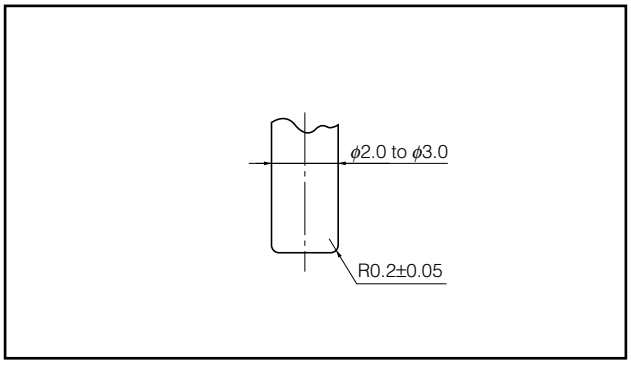

■ Recommended Operating Conditions

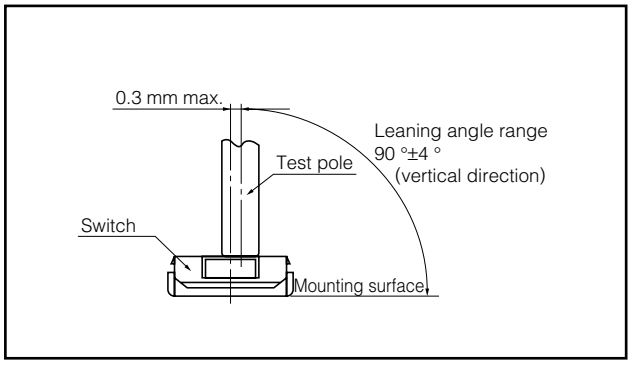

Design and specifications are each subject to change without notice. Ask factory for the current technical specifications before purchase and/or use.
Should a safety concern arise regarding this product, please be sure to contact us immediately.