6.1 mm×4.0 mm Side-operational SMD Light Touch Switches

Type: **EVQPS**



■ Features

- External dimensions : 6.1 mm×4.0 mm, Height 1.8 mm
- Terminal shapes : straight, J-bent

■ Recommended Applications

- Car navigation, Car audio

■ Explanation of Part Numbers

1	2	3	4	5	6	7	8	9
E	V	Q	P	S		0	2	K

Type

6th		Terminal Shape	Operating Force
Embossed Taping			
Without Boss	With Boss		
C	D	J-bent	1.6 N
L	M	Straight	
G	H	J-bent	2.2 N
Q	R	Straight	

7th & 8th	Height
02	1.8 mm

9th	Push Plate Color
K	Black

■ Specifications

Type		Snap action / Push-on type SPST	
Electrical	Rating	10 µA 2 Vdc to 50 mA 12 Vdc (Resistiv load)	
	Contact Resistance	500 mΩ max.	
	Insulation Resistance	100 MΩ min. (at 100 Vdc)	
	Dielectric Withstanding Voltage	250 Vac for 1 minute	
	Bouncing	10 ms max. (ON, OFF)	
Mechanical	Operating Force	1.6 $N^{+0.7}_{-0.4}$ N	2.2 $N^{+0.8}_{-0.7}$ N
	Travel	0.3 mm $^{+0.1}_{-0.2}$ mm	
	Push Strength	30 N for 1 minute	
Endurance	Operating Life	100000 cycles min.	
Operating Temperature		−20 °C to +70 °C	
Storage Temperature		−40 °C to +85 °C (Bulk) −20 °C to +60 °C (Taping)	
Minimum Quantity/Packing Unit		4000 pcs. Embossed Taping (Reel Pack)	
Quantity/Carton		16000 pcs.	

Design and specifications are each subject to change without notice. Ask factory for the current technical specifications before purchase and/or use.
Should a safety concern arise regarding this product, please be sure to contact us immediately.

■ Dimensions in mm (not to scale)

No. 1

EVQPSD
EVQPSH

J-bent terminals,
with Boss



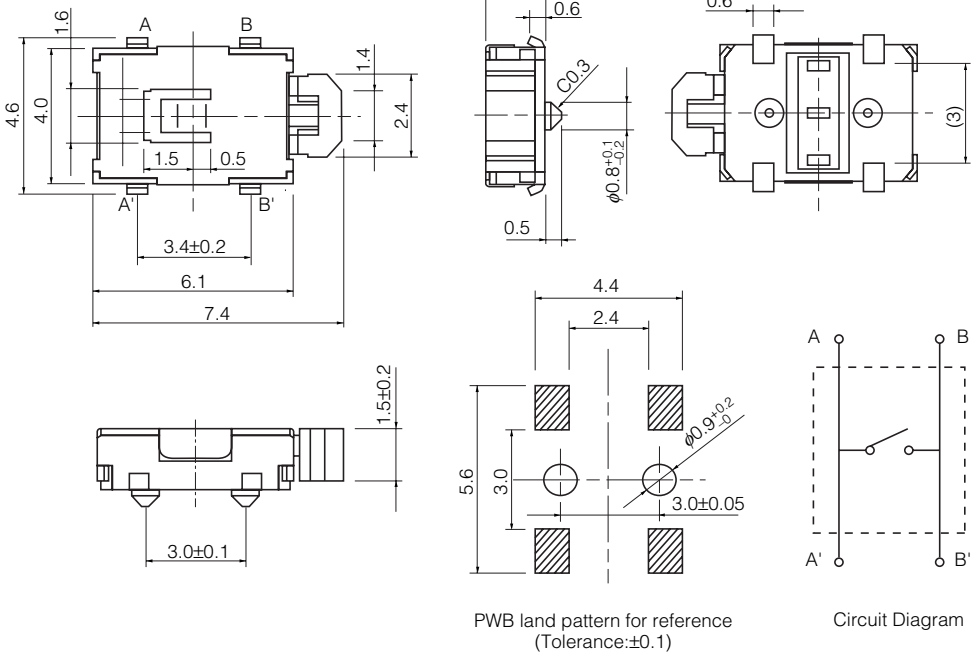

PWB land pattern for reference
(Tolerance:±0.1)

Circuit Diagram

Part Numbers	Operating Force	Height	Push Plate Color	Operating Life
EVQPSD02K	1.6 N	1.8 mm	Black	100000 cycles
EVQPSH02K	2.2 N	1.8 mm	Black	100000 cycles

No. 2

EVQPSM
EVQPSR

Straight terminals,
with Boss



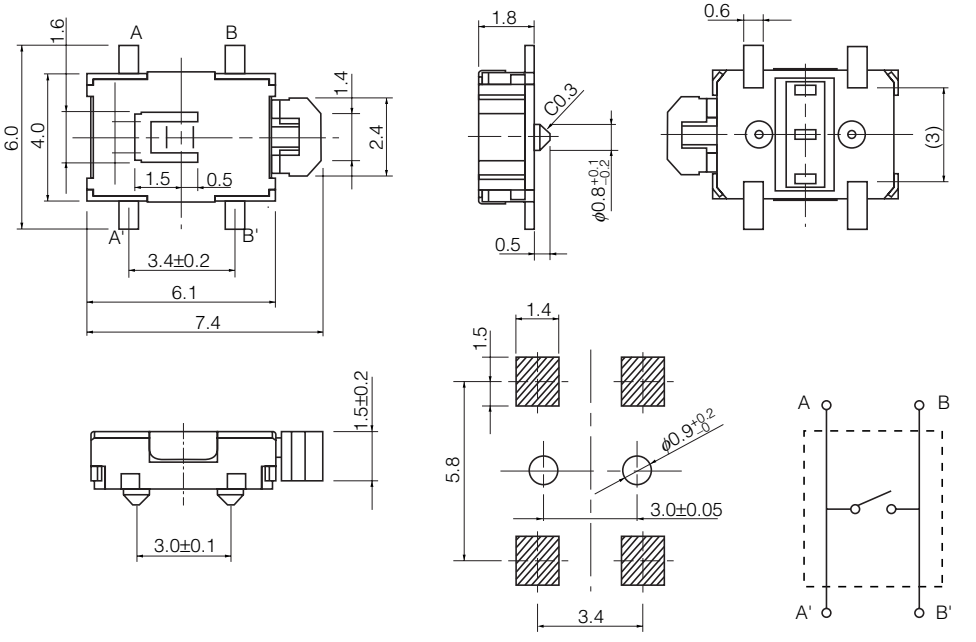

PWB land pattern for reference
(Tolerance:±0.1)

Circuit Diagram

Part Numbers	Operating Force	Height	Push Plate Color	Operating Life
EVQPSM02K	1.6 N	1.8 mm	Black	100000 cycles
EVQPSR02K	2.2 N	1.8 mm	Black	100000 cycles

Design and specifications are each subject to change without notice. Ask factory for the current technical specifications before purchase and/or use.
Should a safety concern arise regarding this product, please be sure to contact us immediately.

■ Dimensions in mm (not to scale)

No. 3

EVQPSC
EVQPSG

J-bent terminals,
without Boss



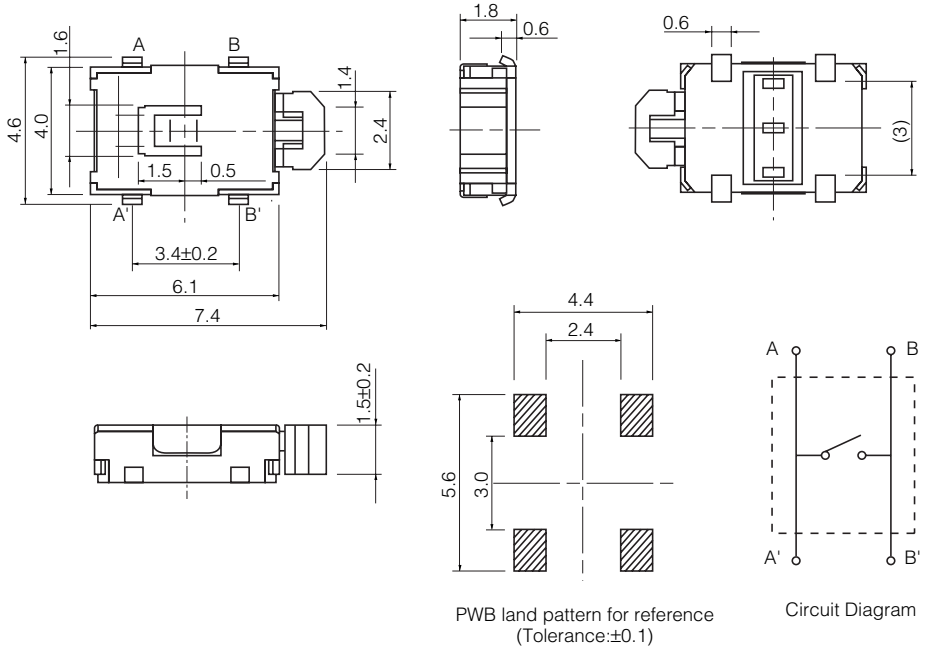

PWB land pattern for reference
(Tolerance:±0.1)

Circuit Diagram

Part Numbers	Operating Force	Height	Push Plate Color	Operating Life
EVQPSC02K	1.6 N	1.8 mm	Black	100000 cycles
EVQPSG02K	2.2 N	1.8 mm	Black	100000 cycles

No. 4

EVQPSL
EVQPSQ

Straight terminals,
without Boss



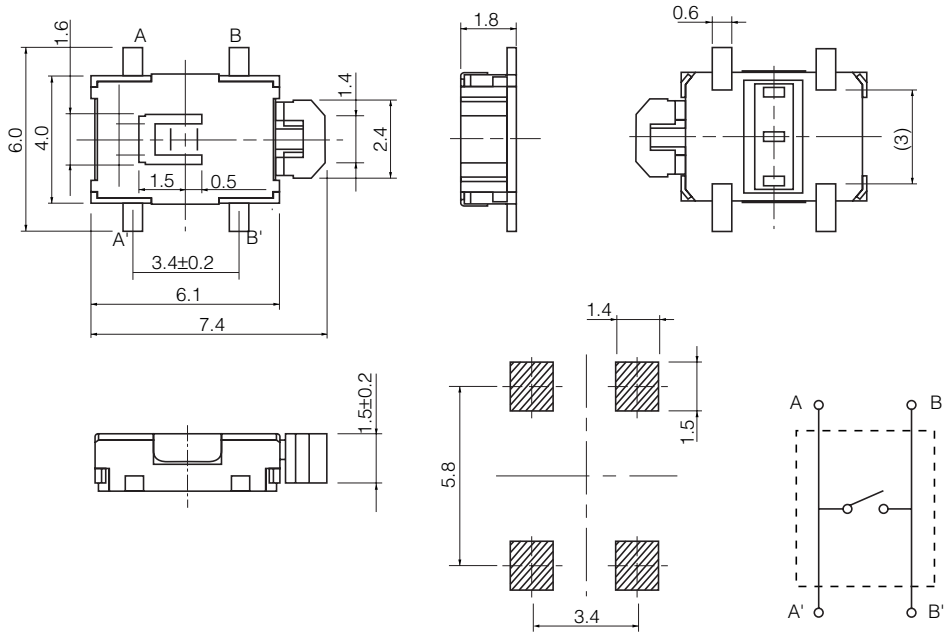

PWB land pattern for reference
(Tolerance:±0.1)

Circuit Diagram

Part Numbers	Operating Force	Height	Push Plate Color	Operating Life
EVQPSL02K	1.6 N	1.8 mm	Black	100000 cycles
EVQPSQ02K	2.2 N	1.8 mm	Black	100000 cycles

Design and specifications are each subject to change without notice. Ask factory for the current technical specifications before purchase and/or use.
Should a safety concern arise regarding this product, please be sure to contact us immediately.

■ Recommended Reflow Soldering Conditions

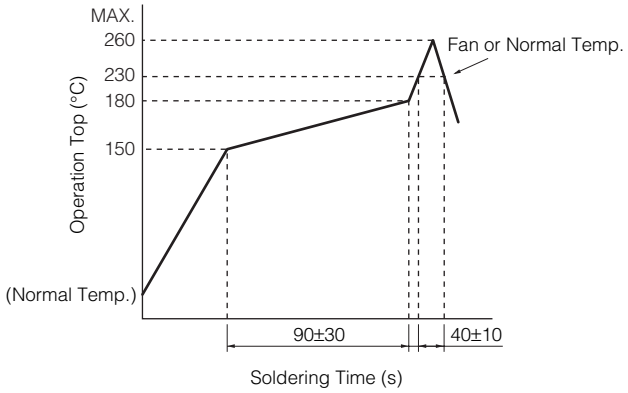

● Embossed Carrier Taping

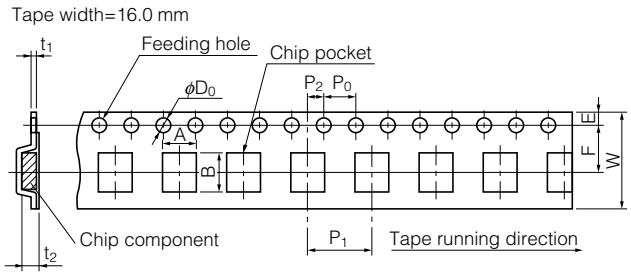

Unit: mm

Part No.	Height	A	B	W	F	E	P_1	P_2	P_0	D_0 Dia.	t_1	t_2
EVQPS	1.8	6.8±0.2	8.0±0.2	16.0±0.3	7.5±0.1	1.75±0.10	8.0±0.1	2.0±0.1	4.0±0.1	$1.5^{+0.1}_{-0}$	0.30±0.05	2.7±0.2

● Standard Reel Dimensions in mm (not to scale)

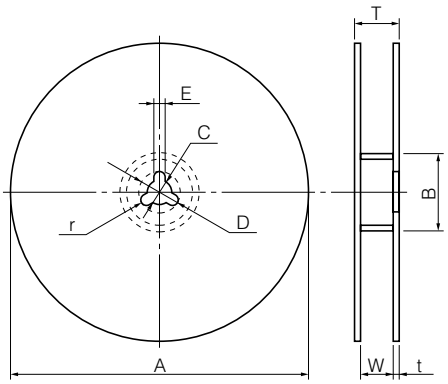

Item	A	B	C	D	E
Rate (mm)	φ370.0±2.0	φ50.0 min.	φ13.0±0.5	φ21.0±1.0	2.0±0.5

Item	W	T	t	r
Rate (mm)	18.0±1.5	—	1.0 to 3.0	1.0±0.5

Design and specifications are each subject to change without notice. Ask factory for the current technical specifications before purchase and/or use.
Should a safety concern arise regarding this product, please be sure to contact us immediately.