EVLSTCH03-45WPD

Data brief

45W USB Type-C® Power Delivery 3.0 adapter based on STCH03, SRK1001 and STUSB4761

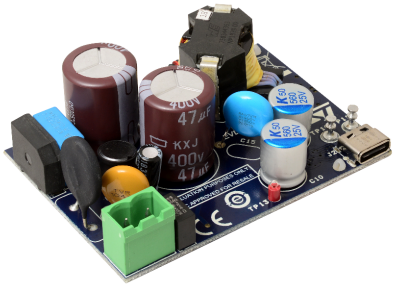

CERTIFIED USB CHARGER 45W

Product status link
EVLSTCH03-45WPD

Features

- USB-IF certified
- USB Type-C® PD 3.0 references:
  - Power Brick EVLSTCH03-45WPD TID: 2071
  - PD Controller STUSB4761 TID: 2070
- Universal AC input range V_{IN}:
  - 90 V_{AC} to 264 V_{AC}
- PD output profile:
  - 5 V - 9 V - 12 V - 15 V @ 3 A
  - 20 V @ 2.25 A
- Maximum efficiency at full load:
  - > 90% @ AC input range
- No-load consumption (no cable plug-in):
  - < 30 mW @ 230 V_{AC}
- Energy efficiency meeting all DOE and UE CoC requirements
- Isolated quasi-resonant flyback topology with adaptive synchronous rectification
- Programmable output voltage and current protections
- Safety according to EN60065
- EMI according to EN55022 - Class B
- Compact form factor: 70 x 50 X 26.8 mm
- RoHS compliant

Description

The EVLSTCH03-45WPD 45W USB Type-C® Power Delivery 3.0 adapter is a USB-IF certified solution and reference design. The **EVLSTCH03-45WPD** is an isolated power supply with a standalone USB PD controller. The evaluation board implements at the primary side a quasi-resonant flyback converter based on the **STCH03** controller with optocoupler feedback for voltage regulation. This controller combines a high performance low-voltage PWM controller chip with a 650 V HV start-up cell in the same package. The STCH03 controller drives the gate of the new 650 V MDmesh™ M6 technology Power MOSFET **STD7N65M6.**

At the secondary side, to increase the system efficiency, the rectification is based on the **SRK1001** adaptive synchronous rectification controller. This controller drives the gate of the 100V STripFET™ F7 technology Power MOSFET **STL110N10F7**.

Always on the secondary side the CC/CV regulation loop to drive the power regulation stage and the USB Type-C® PD interface are based on the **STUSB4761** controller. This controller offers the benefits of a full hardware USB PD stack allowing robust, deterministic and safe negotiation in line with USB PD standard.

The EVLSTCH03-45WPD is protected against destructive electrostatic discharge from the USB Type-C® connector using a Dual Transil array for ESD protection **ESDA25L**.

The evaluation board implements a robust adapter protected for output overvoltage, output undervoltage, output overpower and output short-circuit.This reference design, based on STMicroelectronics semiconductors, helps designers to develop adapters with a short bill of materials in order to obtain a cost-effective and fast design.

1 Electrical schematic

Figure 1. **EVLSTCH03-45W evaluation board schematic**

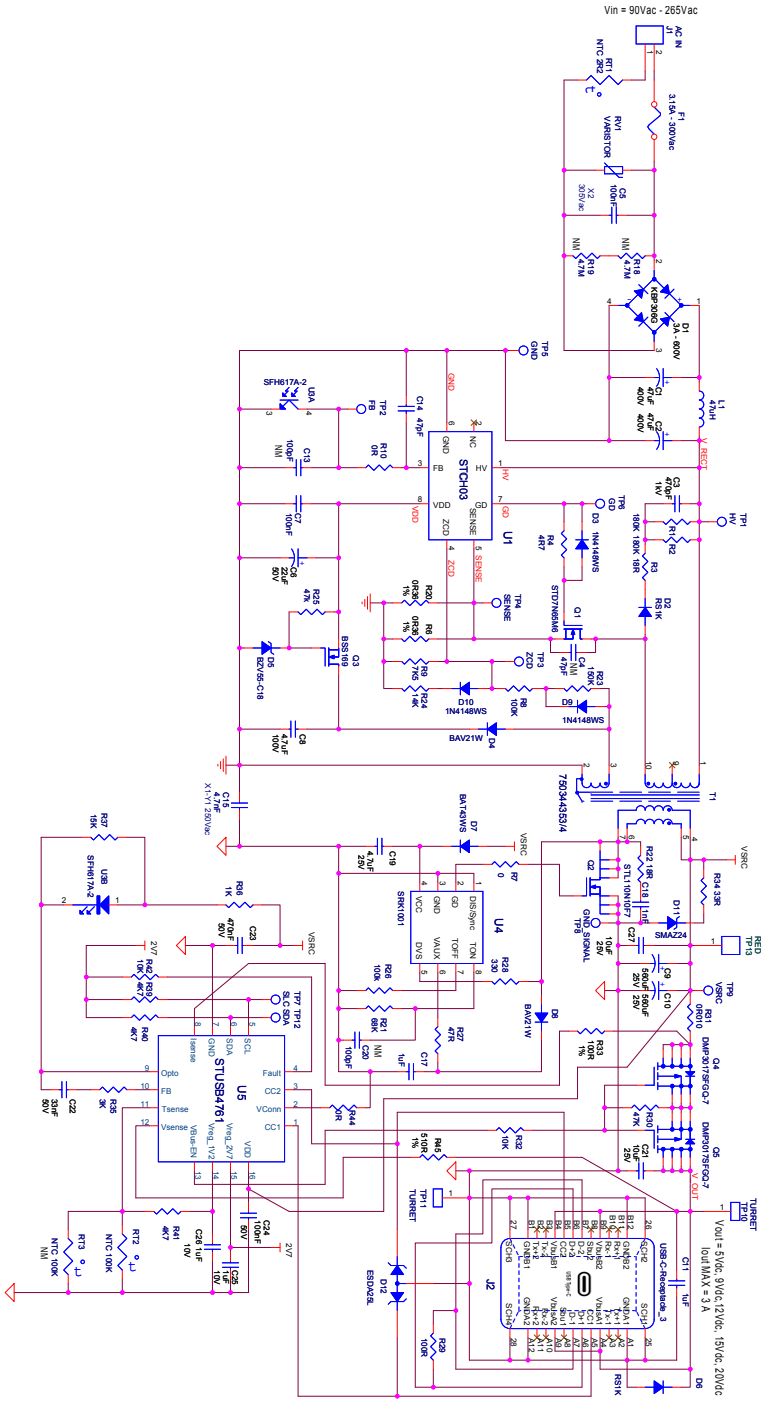

Revision history

Table 1. Document revision history

Date	Version	Changes
21-Oct-2019	1	Initial release.
9-Dec-2019	2	Compact form factor value updated in Section Features

Contents

1 Electrical schematic 3
Revision history 4
Contents 5

IMPORTANT NOTICE – PLEASE READ CAREFULLY

STMicroelectronics NV and its subsidiaries (“ST”) reserve the right to make changes, corrections, enhancements, modifications, and improvements to ST products and/or to this document at any time without notice. Purchasers should obtain the latest relevant information on ST products before placing orders. ST products are sold pursuant to ST’s terms and conditions of sale in place at the time of order acknowledgement.

Purchasers are solely responsible for the choice, selection, and use of ST products and ST assumes no liability for application assistance or the design of Purchasers’ products.

No license, express or implied, to any intellectual property right is granted by ST herein.

Resale of ST products with provisions different from the information set forth herein shall void any warranty granted by ST for such product.

ST and the ST logo are trademarks of ST. For additional information about ST trademarks, please refer to www.st.com/trademarks. All other product or service names are the property of their respective owners.

Information in this document supersedes and replaces information previously supplied in any prior versions of this document.

© 2019 STMicroelectronics – All rights reserved