EVB90109

MLX90109 Evaluation Board

Features and Benefits

- ❑ Minimum PCB size (30 * 30 mm) including a MLX90109 transceiver IC and an optimized antenna
- ❑ Tuned resonance frequency to 125kHz
- ❑ Modulation network on board for a maximum flexibility
- ❑ Setup for fast On/Off keying modulation mode
- ❑ DIL-10 footprint for easy mounting on prototype set up and development kit

Ordering Information

Part No.
EVB90109

Applications Examples

- ❑ Car Immobilizers
- ❑ Portable readers
- ❑ Battery powered door locks
- ❑ Access control
- ❑ House held appliances

Evaluation Board

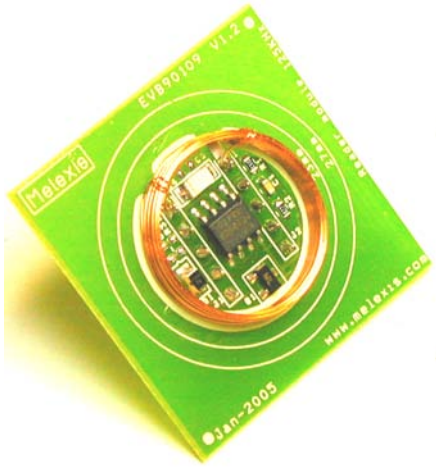

General Description

The EVB90109 is an assembled module that allows evaluating the advantages of the MLX90109 transceiver IC. It will facilitate the starts of RFID applications and can be implemented in a compact way, with minimum development time, and minimum final system cost. All pins of the MLX90109 reader are available on a DIL socket for easy control with an external microcontroller. Two extra pins have been added for extended control options on the voltage on the MODU pin.

The EVB90109 can be used as a 125 kHz reader, to read out the load modulation from a transponder. It can also be used to send information to a transponder using On/Off keying modulation. For fast protocol which required fast fall time on the reader's antenna, the EVB90109 includes a "*Fast decay"* circuit composed of an external transistor and diode in parallel on the antenna. This circuit is accessible through a digital pin on the DIL-10 connector.

Table of Contents

1 EVB90109 ELECTRICAL SPECIFICATIONS 3

2 DESCRIPTION 3

2.1 GENERAL EXPLANATION 3
2.2 PARALLEL ANTENNA 4
2.3 MODULATION NETWORK 4
2.4 ANTENNA VOLTAGE IN READ OPERATION 4
2.5 NOISE CANCELLATION IN READ OPERATION 5
2.6 ANTENNA VOLTAGE IN 100% MODULATION OPERATION 5
2.7 FAST DECAY CIRCUIT 6

3 SCHEMATIC 7

4 PHYSICAL OUTLINE 8

5 PINNING OF THE EVB90109 9

6 COMPONENTS 9

7 DISCLAIMER 10

1 EVB90109 Electrical Specifications

Parameter	Condition	Symbol	Min	Typ	Max	Units
Supply Voltage		Vdd	4.5	5	5.5	Volts
Resonance frequency	Vdd = 5Volts	Fres	120	125	130	kHz

Table 1: Electrical specifications

2 Description

2.1 General explanation

The EVB90109 consists of a single chip inductive RFID reader for the 125 kHz frequency range with an external inductance (L) and capacitance (C) connected as a parallel resonant circuit. The antenna voltage amplitude can be set On/Off externally with the digital line MODUR2, which controls a resistive and capacitive network called "*Modulation network"* connected to the MODU pin of the chip. This allows maximum reading distance and reliability, can be used to preserve energy by easily setting the evaluation board in power down mode and finally allows 100% modulation for reader talk first applications. The EVB90109 also includes a "*fast decay*" circuit composed of an external transistor and diode in parallel to the resonant antenna, used to short the antenna for negative swings to dissipate the remaining energy into the transistor and then, to reduce the fall time of the antenna. For more information, please refer to the application note "*100% Modulation (On/Off keying)*". An additional footprint of "Modulation network" is available on the board and is accessible through the MODUR3 digital connection. All others digital connections as SPEED, MODE, MODU, CLOCK and DATA, are available on the DIL-10 connector.

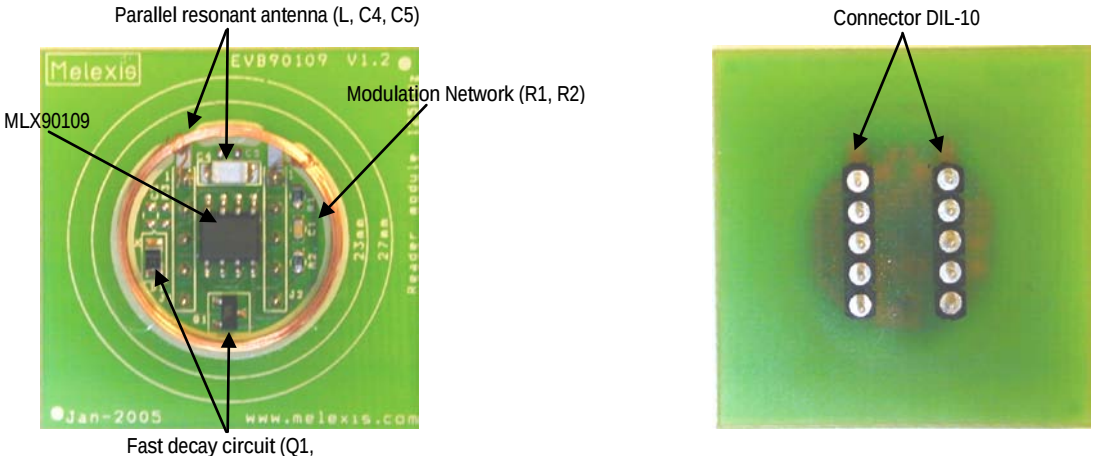

Figure 1: EVB90109

Note: The EVB90109 does not include any pull-up resistors on the digital connections DATA and CLOCK. This must be done externally, by configuring the IO ports of a microcontroller in pull-up mode, or by adding two external resistors connected between the digital pins and Vdd.

2.2 Parallel antenna

The parallel antenna of the EVB90109 consists of the inductance (L) of the reader coil and the tune capacitor (C4), which form a resonant system at 125 kHz with a total (inductance and capacitance) antenna impedance of about 1.3kOhms. The MLX90109 is specified to drive a minimal antenna impedance of 1kOhm, which can be theoretically calculated using the following formula.

$$Z_{ant} = Q_{ant} \cdot \omega_{res} \cdot L_r$$

Care should be taken that the presence of a transponder may reduce the theoretical antenna impedance to be smaller that the minimum specified. Therefore it may be of interest to take some extra margin in the antenna design by taking a slightly higher quality factor to increase the antenna impedance.

A tune capacitance with a poor quality factor may also reduce the global performances of the antenna, as shown in the following formula.

$$Q_{ant} = Q_L \,//\, Q_C$$

Therefore, the tune capacitance should be taken with a high quality factor or low ESR (plastic or mica) to not reduce the total impedance of the antenna and moreover, to not annihilate all the efforts made in the design of the antenna to work with a high quality factor and then to get the maximum of operating distance.

2.3 Modulation network

The modulation network is used to set the voltage on the MODU pin of the MLX90109. As shown in the following formula, the voltage on the antenna can be adjusted according to this voltage. This feature can be used to reduce the power consumption of the chip by setting a lower voltage on the antenna. Under no circumstances it can be used to make proportionnal modulaiton, due to internal feedback loop which doesn't allow this use.

$$V_{ant} = V_{DD} - V_{MODU} - V_{overshoot}$$

The EVB90109 is provided with two resistors R1 and R2 as the modulation netwok controlled through the pin MODUR2 to set the voltage on the antenna respectively On (Vmodu to 0.8 Volts) and Off (Vmodu to 5 Volts). Others footprint C1, C3 and R3 and an extra pin MODUR3 are available on the board and can be used for specific applications.

2.4 Antenna voltage in read operation

The resistors R1 and R2 set VMODU to 0.8V (1V for full temperature range [–40, 85] C) which is the lowest possible voltage to guarantee that the antenna driver of the MLX90109 stays out of its linear operating zone. The field is set On (VMODU to 0.8V) and Off (VMODU to VDD) when applying 0V and VDD on pin MODUR2.

2.5 Noise cancellation in read operation

The resonant antenna is a natural band-pass filter, which becomes more effective as Q_{ant} increases.
The MLX90109 has an internal first order filtering of the envelope that changes according to the setting of the SPEED pin to fit to the biphase and Manchester data spectrum:

2kbaud (speed = 1): 400Hz to 3.6kHz
4kbaud (speed = 0): 800Hz to 7.2kHz

Noise that is injected on MODU pin or on VDD will cause Vant to change, and will therefore be considered to be data by the sampler.
This noise can simply be cancelled by adding a capacitor C1 between MODU and VDD. Together with the modulation network R1 and R2, it creates a high pass filter with cut off frequency at:

$$\frac{1}{2 \cdot \pi \cdot \left(R_1 // R_2\right) \cdot C_1}$$

Note: Due to the long time constant introduces and the parasitic oscillations that it may provoke with the transistor Q1, the capacitor C1 must be removed when using the EVB90109 in On/Off keying modulation mode.

2.6 Antenna voltage in 100% modulation operation

The modulation network R1 and R2 can be used to set the voltage amplitude on the antenna On and Off by applying 0 Volts and Vdd on the pin MODUR2.

Switching ON the magnetic field depends on the internal driver of MLX90109 and takes less than 5 carrier periods. Switching OFF the magnetic field depend on the quality factor (Qant) of the parallel antenna connected to the reader (about 24 periods with the EVB90109). To reduce this fall time, the "*fast decay*" circuit can be used.

2.7 Fast decay circuit

Very small fall time may be required in fast protocol, to be understood by the transponder in the field. This is why, the EVB90109 include a “fast decay” circuit controlled through the pin FAST_DECAY and composed of the transitstor Q1 and the diode D1. The following picture shows how to implement the “fast decay” system.

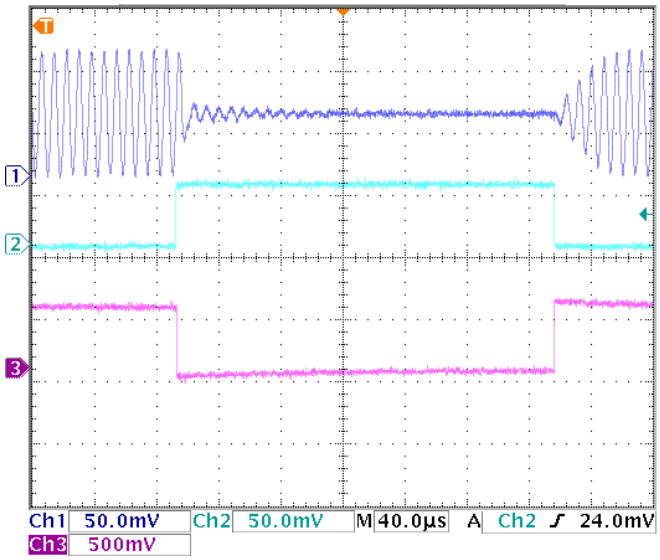

Picture 1: Fast Decay module control, (1) Antenna, (2) MODUR2, (3) FAST_DECAY

3 Schematic

The following diagram shows the schematic of the EVB90109. All components in grey are not mounted but the footprints are present if the user wants to use it for dedicated applications.

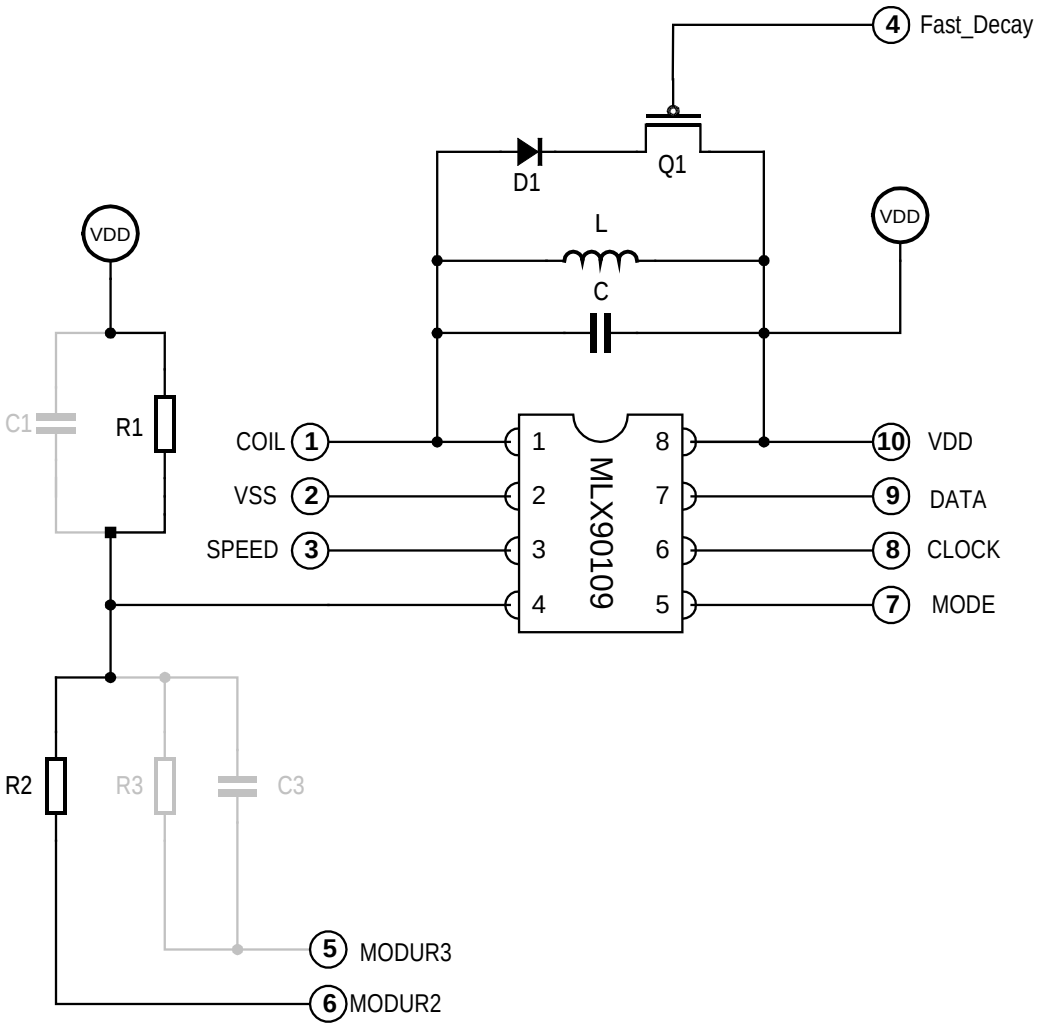

Figure 2: Schematic of the EVB90109

4 Physical outline

The following figure shows the outline of the MLX90109 evaluation board.

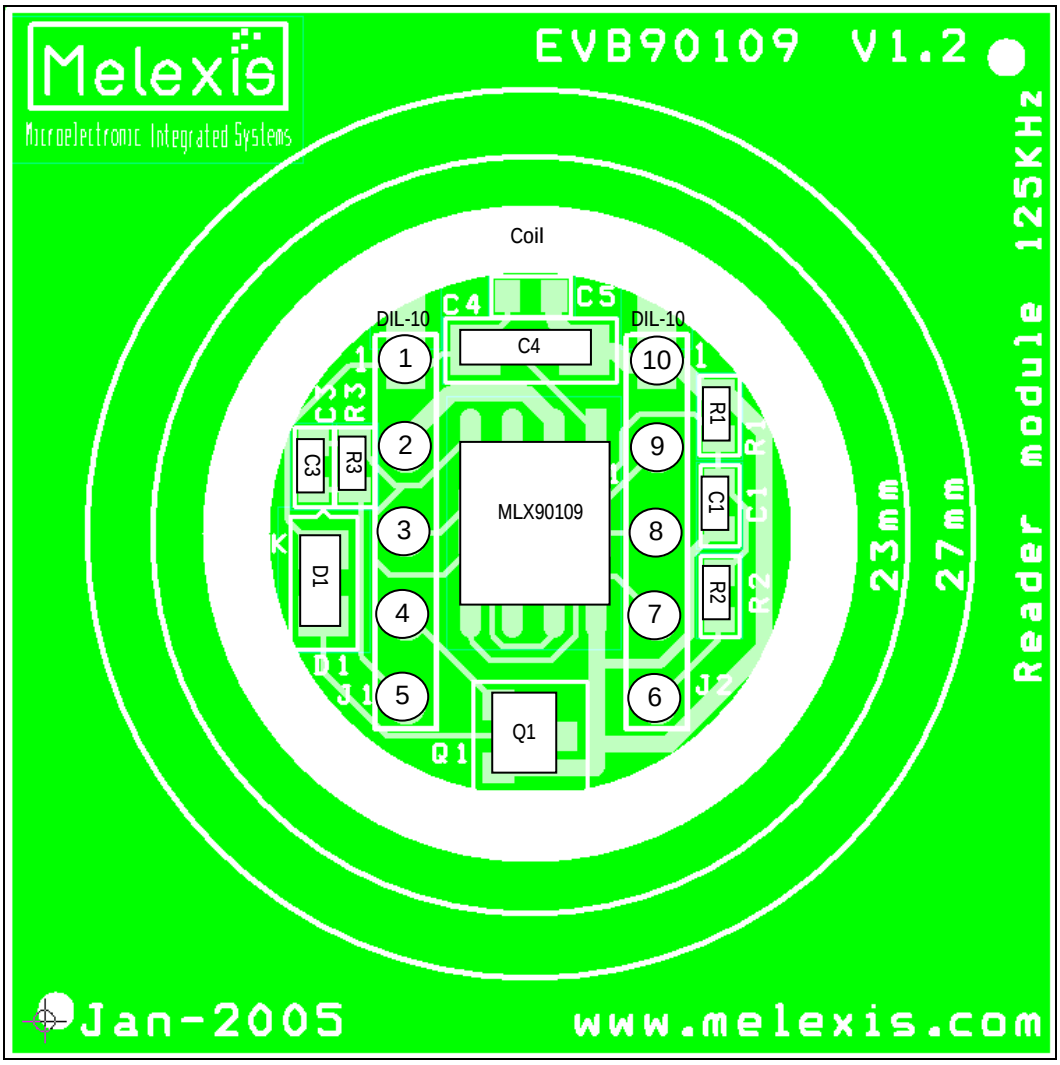

Figure 3: EVB90109 outline: top side

5 Pinning of the EVB90109

Pin number DIL-10	Name	Description
1	COIL	Oscillator Output
2	VSS	Ground
3	SPEED	Data rate selection
4	FAST_DECAY	Fast decay circuit control
5	MODUR3	Modulation Network
6	MODUR2	Modulation Network
7	MODE	Decoding selection
8	CLOCK	Clock signal
9	DATA	Decoded data
10	VDD	Power Supply

Table 2: Pinning of the EVB90109

6 Components

Reference	Value	Description
R1	39 kohms	Modulation network
R2	8.2 kohms	Modulation network
R3	Not mounted	Additional resistor for the modulation network
C1	Not mounted	Noise cancellation capacitance
C2	Not mounted	Additional capacitance for the modulation network
C3	Not mounted	Additional capacitance for the modulation network
C4	22nF	Tune capacitance

Table 3: Components

Reference	Value[1)]	Units	Description
L1	73.7	µH	Coil inductance
Qant	25		Coil quality factor
Zant	1447	kOhm	Antenna Impedance, calculated = $\omega_0 * L_{ant} * Q_{ant}$

Table 4: Reader Coil L1 Electrical Specifications

Reference	Value[1)]	Units	Description
H	3	mm	Coil height
OD	18.9	mm	Outside diameter
ID	17	mm	Inside diameter
Nr	52	-	Number of turns

Table 5: Reader Coil L1 Physical Specifications

[1)] Typical value at 125kHz

7 Disclaimer

Devices sold by Melexis are covered by the warranty and patent indemnification provisions appearing in its Term of Sale. Melexis makes no warranty, express, statutory, implied, or by description regarding the information set forth herein or regarding the freedom of the described devices from patent infringement. Melexis reserves the right to change specifications and prices at any time and without notice. Therefore, prior to designing this product into a system, it is necessary to check with Melexis for current information. This product is intended for use in normal commercial applications. Applications requiring extended temperature range, unusual environmental requirements, or high reliability applications, such as military, medical life-support or life-sustaining equipment are specifically not recommended without additional processing by Melexis for each application.
The information furnished by Melexis is believed to be correct and accurate. However, Melexis shall not be liable to recipient or any third party for any damages, including but not limited to personal injury, property damage, loss of profits, loss of use, interrupt of business or indirect, special incidental or consequential damages, of any kind, in connection with or arising out of the furnishing, performance or use of the technical data herein. No obligation or liability to recipient or any third party shall arise or flow out of Melexis' rendering of technical or other services.
© 2012 Melexis NV. All rights reserved.

For the latest version of this document, go to our website at:
www.melexis.com

Or for additional information contact Melexis Direct:

Europe, Africa:	Americas:	Asia:
Phone: +32 1367 0495	Phone: +1 248-306-5400	Phone: +32 1367 0495
E-mail: sales_europe@melexis.com	E-mail: sales_usa@melexis.com	E-mail: sales_asia@melexis.com