

EVB-USB4715 Evaluation Kit User's Guide

© 2017 Microchip Technology Inc.

Note the following details of the code protection feature on Microchip devices:

- Microchip products meet the specification contained in their particular Microchip Data Sheet.
- Microchip believes that its family of products is one of the most secure families of its kind on the market today, when used in the intended manner and under normal conditions.
- There are dishonest and possibly illegal methods used to breach the code protection feature. All of these methods, to our knowledge, require using the Microchip products in a manner outside the operating specifications contained in Microchip's Data Sheets. Most likely, the person doing so is engaged in theft of intellectual property.
- Microchip is willing to work with the customer who is concerned about the integrity of their code.
- Neither Microchip nor any other semiconductor manufacturer can guarantee the security of their code. Code protection does not mean that we are guaranteeing the product as "unbreakable."

Code protection is constantly evolving. We at Microchip are committed to continuously improving the code protection features of our products. Attempts to break Microchip's code protection feature may be a violation of the Digital Millennium Copyright Act. If such acts allow unauthorized access to your software or other copyrighted work, you may have a right to sue for relief under that Act.

Information contained in this publication regarding device applications and the like is provided only for your convenience and may be superseded by updates. It is your responsibility to ensure that your application meets with your specifications. MICROCHIP MAKES NO REPRESENTATIONS OR WARRANTIES OF ANY KIND WHETHER EXPRESS OR IMPLIED, WRITTEN OR ORAL, STATUTORY OR OTHERWISE, RELATED TO THE INFORMATION, INCLUDING BUT NOT LIMITED TO ITS CONDITION, QUALITY, PERFORMANCE, MERCHANTABILITY OR FITNESS FOR PURPOSE**.** Microchip disclaims all liability arising from this information and its use. Use of Microchip devices in life support and/or safety applications is entirely at the buyer's risk, and the buyer agrees to defend, indemnify and hold harmless Microchip from any and all damages, claims, suits, or expenses resulting from such use. No licenses are conveyed, implicitly or otherwise, under any Microchip intellectual property rights unless otherwise stated.

Trademarks

The Microchip name and logo, the Microchip logo, AnyRate, AVR, AVR logo, AVR Freaks, BeaconThings, BitCloud, CryptoMemory, CryptoRF, dsPIC, FlashFlex, flexPWR, Heldo, JukeBlox, KEELOQ, KEELOQ logo, Kleer, LANCheck, LINK MD, maXStylus, maXTouch, MediaLB, megaAVR, MOST, MOST logo, MPLAB, OptoLyzer, PIC, picoPower, PICSTART, PIC32 logo, Prochip Designer, QTouch, RightTouch, SAM-BA, SpyNIC, SST, SST Logo, SuperFlash, tinyAVR, UNI/O, and XMEGA are registered trademarks of Microchip Technology Incorporated in the U.S.A. and other countries.

ClockWorks, The Embedded Control Solutions Company, EtherSynch, Hyper Speed Control, HyperLight Load, IntelliMOS, mTouch, Precision Edge, and Quiet-Wire are registered trademarks of Microchip Technology Incorporated in the U.S.A.

Adjacent Key Suppression, AKS, Analog-for-the-Digital Age, Any Capacitor, AnyIn, AnyOut, BodyCom, chipKIT, chipKIT logo, CodeGuard, CryptoAuthentication, CryptoCompanion, CryptoController, dsPICDEM, dsPICDEM.net, Dynamic Average Matching, DAM, ECAN, EtherGREEN, In-Circuit Serial Programming, ICSP, Inter-Chip Connectivity, JitterBlocker, KleerNet, KleerNet logo, Mindi, MiWi, motorBench, MPASM, MPF, MPLAB Certified logo, MPLIB, MPLINK, MultiTRAK, NetDetach, Omniscient Code Generation, PICDEM, PICDEM.net, PICkit, PICtail, PureSilicon, QMatrix, RightTouch logo, REAL ICE, Ripple Blocker, SAM-ICE, Serial Quad I/O, SMART-I.S., SQI, SuperSwitcher, SuperSwitcher II, Total Endurance, TSHARC, USBCheck, VariSense, ViewSpan, WiperLock, Wireless DNA, and ZENA are trademarks of Microchip Technology Incorporated in the U.S.A. and other countries.

SQTP is a service mark of Microchip Technology Incorporated in the U.S.A.

Silicon Storage Technology is a registered trademark of Microchip Technology Inc. in other countries.

GestIC is a registered trademark of Microchip Technology Germany II GmbH & Co. KG, a subsidiary of Microchip Technology Inc., in other countries.

All other trademarks mentioned herein are property of their respective companies.

© 2017, Microchip Technology Incorporated, All Rights Reserved.

ISBN: 9781522421832

QUALITY MANAGEMENT SYSTEM
CERTIFIED BY DNV
═ ISO/TS 16949 ═

Microchip received ISO/TS-16949:2009 certification for its worldwide headquarters, design and wafer fabrication facilities in Chandler and Tempe, Arizona; Gresham, Oregon and design centers in California and India. The Company's quality system processes and procedures are for its PIC® MCUs and dsPIC® DSCs, KEELOQ® code hopping devices, Serial EEPROMs, microperipherals, nonvolatile memory and analog products. In addition, Microchip's quality system for the design and manufacture of development systems is ISO 9001:2000 certified.

© 2017 Microchip Technology Inc.

Object of Declaration: EVB-USB4715

EU Declaration of Conformity

This declaration of conformity is issued by the manufacturer.
The development/evaluation tool is designed to be used for research and development in a laboratory environment. This development/evaluation tool is not a Finished Appliance, nor is it intended for incorporation into Finished Appliances that are made commercially available as single functional units to end users under EU EMC Directive 2004/108/EC and as supported by the European Commission's Guide for the EMC Directive 2004/108/EC (8th February 2010).
This development/evaluation tool complies with EU RoHS2 Directive 2011/65/EU.
This development/evaluation tool, when incorporating wireless and radio-telecom functionality, is in compliance with the essential requirement and other relevant provisions of the R&TTE Directive 1999/5/EC and the FCC rules as stated in the declaration of conformity provided in the module datasheet and the module product page available at www.microchip.com.
For information regarding the exclusive, limited warranties applicable to Microchip products, please see Microchip's standard terms and conditions of sale, which are printed on our sales documentation and available at www.microchip.com.
Signed for and on behalf of Microchip Technology Inc. at Chandler, Arizona, USA.



Derek Carlson
VP Development Tools

11-NOV-16
Date

NOTES:

© 2017 Microchip Technology Inc.

Table of Contents

Preface **7**
Introduction 7
Document Layout 7
Conventions Used In This Guide 8
Warranty Registration 9
The Microchip Web Site 9
Customer Support 9
Document Revision History 9

Chapter 1. Overview
1.1 EVB-USB4715 Overview 11
1.2 Features 11
1.3 Block Diagram 12
1.4 References 12
1.5 Definitions 13

Chapter 2. Getting Started
2.1 Contents of the Kit 14
2.2 Getting Started 14
2.2.1 Quick Start 14

Chapter 3. Hardware Configuration
3.1 Hardware Configuration Options 15
3.1.1 Configuration 15
3.1.2 Power Source - Self Powered 17
3.1.3 Downstream Port Power Control 17
3.1.4 USB Type-C Ports 17
3.1.5 LED Indicators on EVB-USB4715 17
3.1.6 Switches on EVB-USB4715 18
3.1.7 Connector Descriptions for EVB-USB4715 18
3.1.8 Test Points on USB4715 19

Appendix A. Schematics
A.1 Introduction 20

Appendix B. EVB-USB4715 BOM
B.1 Introduction 27

Appendix C. EVB-USB4715 PCB Silk Screens
C.1 Introduction 30

Worldwide Sales and Service **32**

© 2017 Microchip Technology Inc.

NOTES:

© 2017 Microchip Technology Inc.

Preface

NOTICE TO CUSTOMERS

All documentation becomes dated, and this manual is no exception. Microchip tools and documentation are constantly evolving to meet customer needs, so some actual dialogs and/or tool descriptions may differ from those in this document. Please refer to our web site (www.microchip.com) to obtain the latest documentation available.

Documents are identified with a "DS" number. This number is located on the bottom of each page, in front of the page number. The numbering convention for the DS number is "DSXXXXXA", where "XXXXX" is the document number and "A" is the revision level of the document.

For the most up-to-date information on development tools, see the MPLAB® IDE online help. Select the Help menu, and then Topics to open a list of available online help files.

INTRODUCTION

This chapter contains general information that will be useful to know before using the EVB-USB4715. Items discussed in this chapter include:

- Document Layout
- Conventions Used In This Guide
- Warranty Registration
- The Microchip Web Site
- Customer Support
- Document Revision History

DOCUMENT LAYOUT

This document describes how to use the EVB-USB4715 as a demonstration platform optimized for portable applications. The manual layout is as follows:

- **Chapter 1. "Overview"** – Shows a brief description of the EVB-USB4715
- **Chapter 2. "Getting Started"** – Provides information about set-up and operation of the EVB-USB4715.
- **Chapter 3. "Hardware Configuration"** – Includes information about the hardware configuration of the EVB-USB4715.
- **Appendix A. "Schematics"**
- **Appendix B. "EVB-USB4715 BOM"**
- **Appendix C. "EVB-USB4715 PCB Silk Screens"**

© 2017 Microchip Technology Inc.

CONVENTIONS USED IN THIS GUIDE

This manual uses the following documentation conventions:

DOCUMENTATION CONVENTIONS

Description	Represents	Examples
Arial font:		
Italic characters	Referenced books	*MPLAB® IDE User's Guide*
	Emphasized text	...is the *only* compiler...
Initial caps	A window	the Output window
	A dialog	the Settings dialog
	A menu selection	select Enable Programmer
Quotes	A field name in a window or dialog	"Save project before build"
Underlined, italic text with right angle bracket	A menu path	*File>Save*
Bold characters	A dialog button	Click **OK**
	A tab	Click the **Power** tab
N'Rnnnn	A number in verilog format, where N is the total number of digits, R is the radix and n is a digit.	4'b0010, 2'hF1
Text in angle brackets < >	A key on the keyboard	Press <Enter>, <F1>
Courier New font:		
Plain Courier New	Sample source code	`#define START`
	Filenames	`autoexec.bat`
	File paths	`c:\mcc18\h`
	Keywords	`_asm, _endasm, static`
	Command-line options	`-Opa+, -Opa-`
	Bit values	`0, 1`
	Constants	`0xFF, 'A'`
Italic Courier New	A variable argument	*`file`*`.o`, where *`file`* can be any valid filename
Square brackets [ ]	Optional arguments	`mcc18 [options]` *`file`* `[options]`
Curly brackets and pipe character: { | }	Choice of mutually exclusive arguments; an OR selection	`errorlevel {0|1}`
Ellipses...	Replaces repeated text	`var_name [, var_name...]`
	Represents code supplied by user	`void main (void) { ... }`

© 2017 Microchip Technology Inc.

WARRANTY REGISTRATION

Please complete the enclosed Warranty Registration Card and mail it promptly. Sending the Warranty Registration Card entitles users to receive new product updates. Interim software releases are available at the Microchip web site.

THE MICROCHIP WEB SITE

Microchip provides online support via our web site at www.microchip.com. This web site is used as a means to make files and information easily available to customers. Accessible by using your favorite Internet browser, the web site contains the following information:

- **Product Support** – Data sheets and errata, application notes and sample programs, design resources, user's guides and hardware support documents, latest software releases and archived software
- **General Technical Support** – Frequently Asked Questions (FAQs), technical support requests, online discussion groups, Microchip consultant program member listing
- **Business of Microchip** – Product selector and ordering guides, latest Microchip press releases, listing of seminars and events, listings of Microchip sales offices, distributors and factory representatives

CUSTOMER SUPPORT

Users of Microchip products can receive assistance through several channels:

- Distributor or Representative
- Local Sales Office
- Field Application Engineer (FAE)
- Technical Support

Customers should contact their distributor, representative or field application engineer (FAE) for support. Local sales offices are also available to help customers. A listing of sales offices and locations is included in the back of this document.

Technical support is available through the web site at:
http://www.microchip.com/support

DOCUMENT REVISION HISTORY

Revision A (October 2017)

- Initial Release of this Document.

NOTES:

© 2017 Microchip Technology Inc.

Chapter 1. Overview

1.1 EVB-USB4715 OVERVIEW

The EVB-USB4715 is a demonstration and evaluation platform that provides the necessary requirements and interface options for evaluating the USB4715, a 4-Port HS USB Smart Hub on a 4-layer RoHS-compliant Printed Circuit Board (PCB). This will allow the user to gain an understanding of the product and accelerate the integration of the USB4715 into the user's design. The USB4715 is compliant with USB 2.0 High-Speed (HS), Full-Speed (FS), and Low-Speed (LS) USB signaling. The evaluation platform supports four downstream ports; two USB 2.0 ports with Type-C™ connectors and two standard Type-A USB 2.0 ports. The EVB-USB4715 platform also supports battery charging on all four ports (maximum of 10A* at any one time). The EVB-USB4715 is configured for operation through internal default settings and supports custom configurations through SMBus or through the external 16-Mbit SPI Flash device. The EVB-USB4715 supports FlexConnect role reversal for any of the four downstream ports with the upstream port. The EVB-USB4715 demonstrates driver compatibility with Microsoft® Windows® 10, Windows 8.x, Windows 7, Windows XP, Mac OS® X 10.4+, and Linux® hub drivers.

See **Section 1.2 "Features"** for more information.

Note: *Requires a 12V, 85W supply.

1.2 FEATURES

- Microchip's PortSwap, PHYBoost™, and VariSense™ technologies.
- USB4715 in a 48-pin QFN RoHS compliant package.
- USB 2.0 compliant (HS, FS, and LS operation).
- USB pins are 5 V tolerant.
- Self powered operation.
- USB USB 2.0 micro-AB upstream port.
- Four Downstream USB ports:
  - Two Type-C USB 2.0 downstream ports.
  - Two Type-A USB 2.0-Only downstream ports.
- All downstream ports support individual port power and overcurrent sense.
- All downstream ports can be enabled for battery charging with the battery charging select shunts J1 and J20 (BC1.2 or SE1, 2.1A max per port).
- Onboard SPI Flash for external downloadable firmware.
- Operates from a single voltage (+12.0 V, regulated) external power supply.
- Onboard 25 MHz crystal or external clock input.
- Single onboard +5.2 V, 10 Amp regulator.
- Single onboard +3.3 V, 0.5 Amp regulator.
- Port Power LED indicators.
- Port Connection indicators (in CONFIG3).
- SPI Flash activity blue LED indicator.
- Reset red LED indicator.

© 2017 Microchip Technology Inc.

- Green LED indicators for 3.3V supply.
- Terminal block connector for use with an external bench supply.
- Barrel connector for use with a Microchip 12V power supply.
- Removable/non-removable downstream ports can be configured with select shunt J1 and J21.
- Bridge peripheral functions:
  - USB-to-UART (CDC)
  - USB-to-I^{2}S Audio Codec
  - USB-to-SMBus
  - USB-to-SPI

1.3 BLOCK DIAGRAM

FIGURE 1-1: USB4715 BLOCK DIAGRAM

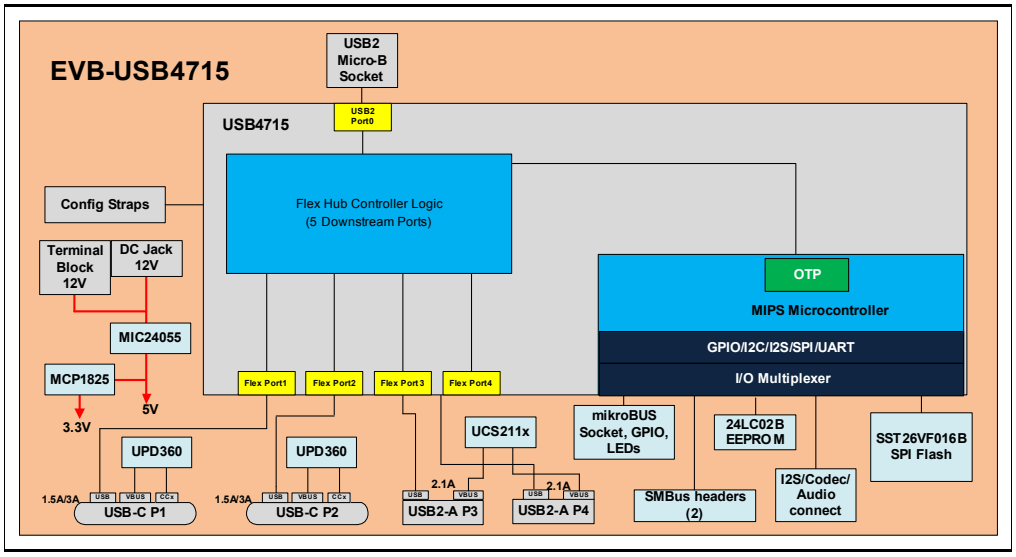

1.4 REFERENCES

- Microchip, USB4715 Datasheet. DS00002514A
- USB-IF, Battery Charging Specification. Revision 1.2. December 7, 2010
- USB-IF, Type-C Cable and Connector Specification. Revision 1.1. April 3, 2015

© 2017 Microchip Technology Inc.

1.5 DEFINITIONS

- **BC1.2** - Latest USB-IF specified USB battery charging standard
- **CDP** - Charging Downstream Port. A BC1.2 compliant port allows simultaneous USB data and USB charging.
- **DCP** - Dedicated Charging Port. A BC1.2 compliant port which is only capable of USB charging (no data).
- **DFP** - Downstream Facing Port
- **EVB** - Evaluation Board
- **HS** - USB 2.0 High-Speed
- **OTP** - One Time Programmable Memory
- **SDP** - Standard Downstream Port. A standard USB port with no high-current battery charging capabilities.
- **SE1** - Type of Battery Charging (non-USB compliant) which sets the USB D+/D- to specific DC voltages to communicate charging capability
- **Type-C** - Reversible USB Connector
- **UFP** - Upstream Facing Port
- **USB-IF** - USB Integrators Forum. Collection of corporate sponsored members responsible for developing USB specifications.

Chapter 2. Getting Started

2.1 CONTENTS OF THE KIT

The EVB-USB4715 evaluation kit includes the basic equipment necessary for evaluation. The items included in the kit are:

1. **EVB-USB4715 Evaluation Board**
2. **12V Power Supply**
3. **USB cable, A to micro-B**

2.2 GETTING STARTED

The Microchip EVB-USB4715 is designed for flexible configuration solutions. It can be configured via default internal register settings, downloadable external firmware to an onboard SPI Flash, through SMBus, or through the onboard configuration switches.

Microchip provides a comprehensive software programming tool, MPLAB® Connect, for configuring USB4715 functions, registers, and OTP memory. When configured with the default internal register settings, the device operates as a USB 2.0 hub with 4 USB ports and Microchip's standard VID/PID/DID settings. For additional information on the MPLAB Connect programming tool, refer to Software Libraries within Microchip USB4715 product page at www.microchip.com/USB4715

2.2.1 Quick Start

To quickly start using the board, perform the following steps:

1. Connect the included 12V power supply to barrel connector on the EVB-USB4715 (**J11**).
2. Using a USB Type-A plug to USB micro-B plug cable, connect the EVB-USB4715 to a USB host via the upstream "Port 0" USB micro-B socket (**J4**).
3. You may now connect devices to any of the downstream ports to enumerate and use those devices with the USB host.
4. Connect a shunt to jumper "VBUS_DET" (**J4**).
5. Slide the "ON/OFF" switch (**SW2**) to "ON".
6. You can perform additional configuration or evaluate specific features by launching the MPLAB Connect software on your USB host or by manipulating the included hardware configuration options detailed in the next section.

© 2017 Microchip Technology Inc.

Chapter 3. Hardware Configuration

3.1 HARDWARE CONFIGURATION OPTIONS

FIGURE 3-1: EVB-USB4715 REV B (TOP-SIDE)

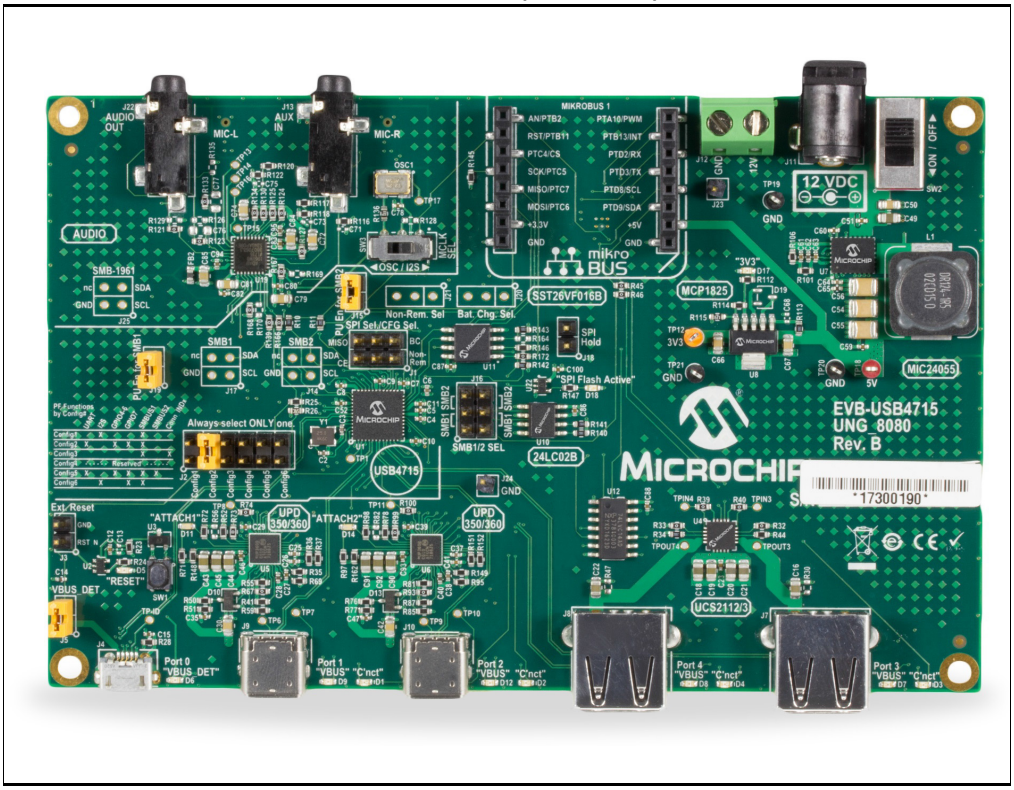

3.1.1 Configuration

3.1.1.1 EXTERNAL SPI FLASH

Upon power-up, the USB4715 first looks for an external SPI ROM device and a valid signature in the Flash. If one is found, the external ROM is enabled and code execution is initiated from the external SPI ROM device.

To select the SPI device, install a shunt to short **J18**. Install shunts to pins 2-3 and 5-6 of **J1**. When code is executing from a SPI ROM device, a blue LED (**D18)** will illuminate.

Note:	CFG_BC and CFG_Non-Rem options are deselected when a shunt is installed on **J1**. When operating in SPI mode, all configuration is handled by the code executing from the SPI ROM device.
Note:	If the SPI Flash is not properly programmed or has an invalid signature, the USB4715 will revert to internal defaults even if the SPI ROM is selected.

3.1.1.2 SMBUS2

If a SPI Flash device is not found, the firmware checks if SMBus2 is enabled.

To select SMBus2 configuration, leave **J18** open to disconnect the SPI ROM and select the CONFIG5 option from the CFG_STRAP header by shunting pins 9-10 of **J2**. Connect the SMBus2 pull-up resistors by connecting a shunt to **J15** pins 1-2. The SMBus2 signals may be accessed at **J14**, pins 1 and 3 (pin2 is ground).

If CONFIG5 is selected and SMBus2 is enabled (that is, SMBus2 clock and data are pulled up), the USB4715 will wait indefinitely for data from the SMBus2 interface and will not enumerate to the USB host until the special USB_ATTACH command is sent.

3.1.1.3 INTERNAL DEFAULT CONFIGURATIONS WITH STRAPPING OPTIONS

When the USB4715 does not detect a valid SPI Flash image or SMBus2 configuration upon power-up, the USB4715 uses internal default register settings. It also sets the Vendor ID, Product ID, Language ID, and Device ID, and additional settings from internal ROM code.

If configuration is not done through SPI or SMBus2, additional configuration is available through two hardware straps: CFG_BC_EN and CFG_NON-REM. The controls are configured by selecting one of six resistor values for each pin. The EVB-USB4715 demonstrates two of the six possible resistor values for each of CFG_BC_EN and CFG_NON-REM. These straps are read by the USB4715 device at power-on to determine the default configuration of the device.

To select the CFG_BC_EN and CFG_NON-REM modes, shunts must be connected to **J20** and **J21** headers.

To use the battery charging options, connect a shunt to pins 4-5 of **J1**. For NON_REM options, connect a shunt to pins 1-2 of **J1**. Select the desired CFG_BC_EN option by connecting a shunt to **J20**. Select the desired CFG_NON-REM option by connecting a shunt to **J21**.

TABLE 3-1: BATTERY CHARGING OPTIONS (CFG_BC_EN - J20)

Shunt Position	Configuration
1-2	Ports 1-4 are BC1.2 enabled
2-3	Port 1 is BC1.2 enabled

TABLE 3-2: NON-REMOVABLE PORT OPTIONS (CFG_NON-REM - J21)

Shunt Position	Configuration
1-2	All ports are removable
2-3	Port 1 is non-removable

© 2017 Microchip Technology Inc.

3.1.2 Power Source - Self Powered

The EVB-USB4715 only supports self-powered operation, and is powered through one +12.0V regulated 'wall wart' external power supply. The power supply plugs into the 2.5 mm connector **J11** on the board. Alternatively, an external voltage can be supplied to the screw terminal TERM_BLOCK_2P (**J12**). The +12.0V feeds a 10A regulator which outputs +5.2V to devices on the board and also supplies the +3.3V regulator.

Note: The supplied 12.0V external power supply cannot support simultaneous battery charging on all downstream ports. Use a higher power supply if the required test use case exceeds the power capability of the supply. Failure to heed to this warning could result in damage to the 12.0V external power supply.

3.1.3 Downstream Port Power Control

USB power to the four downstream ports is controlled via port power controllers with auto-discharge function.

The two downstream Type-C ports are capable of up to 3A of USB Type-C battery charging. Downstream port 1 is configured for 3A charging by default. The two downstream USB Type-A ports are capable of up to 2.1A of USB battery charging.

3.1.4 USB Type-C Ports

The EVB-USB4715 has two Type-C ports. These are USB 2.0 HS ports. The USB Type-C ports utilize the Microchip UPD360 Type-C port controller in order to detect USB Type-C attachment and plug orientation. The UPD360 monitors the voltage on the USB Type-C CC wires in order to detect USB Type-C attach events. The downstream ports 1 and 2 use UPD360s configured for 3A operation by default.

3.1.5 LED Indicators on EVB-USB4715

Table 3-3 describes the LED indicators included on the EVB-USB4715.

TABLE 3-3: LED INDICATOR DESCRIPTIONS

REF. DES.	LABEL	DESCRIPTION
D1	“C’nct3”	PORT3 is connected (enumerated)
D2	“C’nct2”	PORT2 is connected (enumerated)
D3	“C’nct1”	PORT1 is connected (enumerated)
D4	“C’nct4”	PORT4 is connected (enumerated)
D5	“RESET”	The RST_N signal is asserted.
D6	“PORT0 VBUS”	Illuminates when 5V to upstream PORT0 VBUS is present.
D7	“PORT3 VBUS”	Illuminates when 5V to upstream PORT3 VBUS is present.
D8	“PORT4 VBUS”	Illuminates when 5V to upstream PORT4 VBUS is present.
D9	“PORT1 VBUS”	Illuminates when 5V to upstream PORT1 VBUS is present.
D11	“ATTACH1”	Illuminates when a device is detected by CC signals on PORT1.
D12	“PORT2 VBUS”	Illuminates when 5V to upstream PORT2 VBUS is present.
D14	“ATTACH2”	Illuminates when a device is detected by CC signals on PORT2.
D17	“3V3”	Indicates 3.3V is present from the 3.3V voltage regulator.
D18	“SPI Flash Active”	Indicates SPI Flash Memory activity.

3.1.6 Switches on EVB-USB4715

Table 3-4 describes the switches included on the EVB-USB4715.

TABLE 3-4: SWITCH DESCRIPTIONS

REF. DES.	LABEL	DESCRIPTION
SW1	"RESET"	Momentary push-button switch to assert RST_N.
SW2	"ON/OFF"	Connects or disconnects the 12VDC supply
SW3	"OSC/I2S"	Selects the clock source for the audio codec. The default selection is 12S.

3.1.7 Connector Descriptions for EVB-USB4715

Table 3-5 describes the connectors included on the PCB.

TABLE 3-5: USB4715 CONNECTOR DESCRIPTIONS

REF. DES.	TYPE	LABEL	DESCRIPTION
J1	2x3 Header	"SPI_DI/CFG_BC_EN" "SPI_CEn/CFG_NON_REM"	Selects the between SPI memory capability and BC/NON_REM capability. For SPI, connect pins 2-3, 5-6. For BC, connect pins 4-5. For NON_REM, connect pins 1-2.
J2	2x6 Header	"CFG_STRAP1"	Selects the CONFIGx configuration mode for EVB-USB4715if no valid SPI memory image was detected. CONFIG1: I2S CONFIG2: UART, GPIO 4-6 CONFIG3: CONN_INDx CONFIG4: (Reserved) CONFIG5: UART, GPIO 4-7, SMBUS2 CONFIG6: I2S, GPIO 7
J3	2x1 Header	"Ext.Reset"	Connection for an external reset switch.
J4	USB2 Micro-AB Connector	"PORT0"	Upstream USB2 connection
J5	1x2 Header	"VBUS_DET"	Connects VBUS from host to VBUS_DET
J7	USB2 Type-A Connector	"PORT3"	Downstream Port 3 USB connection
J8	USB2 Type-A Connector	"PORT4"	Downstream Port 4 USB connection
J9	USB Type-C Connector	"PORT1"	Downstream Port 1 connection
J10	USB Type-C Connector	"PORT2"	Downstream Port 2 connection
J11	Barrel Jack	"12VDC"	12 VDC supply connection (center pin positive)
J12	2-pin terminal block	-	Alternative 12 VDC supply connection. Pin 1 is positive.
J13	Audio Jack, 3.5mm	"AUX IN"	Audio input for I^2S codec
J14	2x2 Header	"SMB2"	Connection for SMBus2 (slave)
J15	1x2 Header	"SMB2 PU"	Connects the pull-up resistors for SMB2
J16	2x3 Header	"SMB1/SMB2"	Selects SMBus1 or SMBus2 to the EEPROM. No connection if EEPROM is unused.

© 2017 Microchip Technology Inc.

TABLE 3-5: USB4715 CONNECTOR DESCRIPTIONS (CONTINUED)

REF. DES.	TYPE	LABEL	DESCRIPTION
J17	2x2 Header	“SMB1”	Connection for SMBus1 (master, bridge)
J18	1x2 Header	“HOLD”	When shunted, disables the SPI memory.
J19	1x2 Header	“SMB1 PU”	Connects the pull-up resistors for SMB1
J20	1x2 Header	“Battery Charging Select”	See Table 3-1.
J21	1x2 Header	“Non-Removable Select”	See Table 3-2.
J22	Audio Jack, 3.5mm	“AUDIO OUT”	Audio output from the I2S
J23	1x1 Header	“GND”	Ground
J24	1x1 Header	“GND”	Ground
J25	2x2 Header	“SMB-1961‘”	SMB1 connection for the audio codec

3.1.8 Test Points on USB4715

Table 3-6 describes the test points included on the EVB-USB4715. A header may be permanently installed on the through-hole test points if needed.

TABLE 3-6: USB4715 TEST POINT DESCRIPTIONS

REF. DES.	TYPE	DESCRIPTION
TP1	Test Pad	PRT_CTL_GANG
TP6	Test Pad	PORT1 CC1
TP7	Test Pad	PORT1 CC2
TP8	Test Pad	PRTCTL1
TP9	Test Pad	PORT2 CC1
TP10	Test Pad	PORT2 CC2
TP11	Test Pad	PRTCTL2
TP12	Test Loop (Orange)	3.3V regulator output
TP13	Test Pad	Audio Codec LOUTP
TP14	Test Pad	Audio Codec LOUTN
TP15	Test Pad	Audio Codec ROUTP
TP16	Test Pad	Audio Codec ROUTN
TP17	Test Pad	Audio Codec Oscillator Output Enable
TP18	Test Loop (Red)	5V regulator output. Nominally 5.2V
TP19	Test Loop (Black)	Ground
TP20	Test Loop (Black)	Ground
TP21	Test Loop (Black)	Ground

Appendix A. Schematics

A.1 INTRODUCTION

This appendix includes the EVB-USB4715 schematics.

FIGURE A-1: EVB-USB4715 SCHEMATIC (PAGE 1)

EVB-USB4715

Table of Contents

Sheet	Description
1	Table of Contents, Block Diagram
2	USB4715, Reset, Configuration
3	Memory
4	USB A and B Ports
5	USB C Ports
6	Voltage Regulators
7	Audio Codec

Revision History

Revision	Date	Revision Summary	Author
A	1/27/2017	Initial release of design	J. Hunt
B	3/27/2017	Corrections of Rev. A errata. See Rev B0 Board Specification for list.	J. Hunt

Notes

1	All resistors are 1% unless specified otherwise
2	Shunt jumper default selections are marked with an asterisk [*].

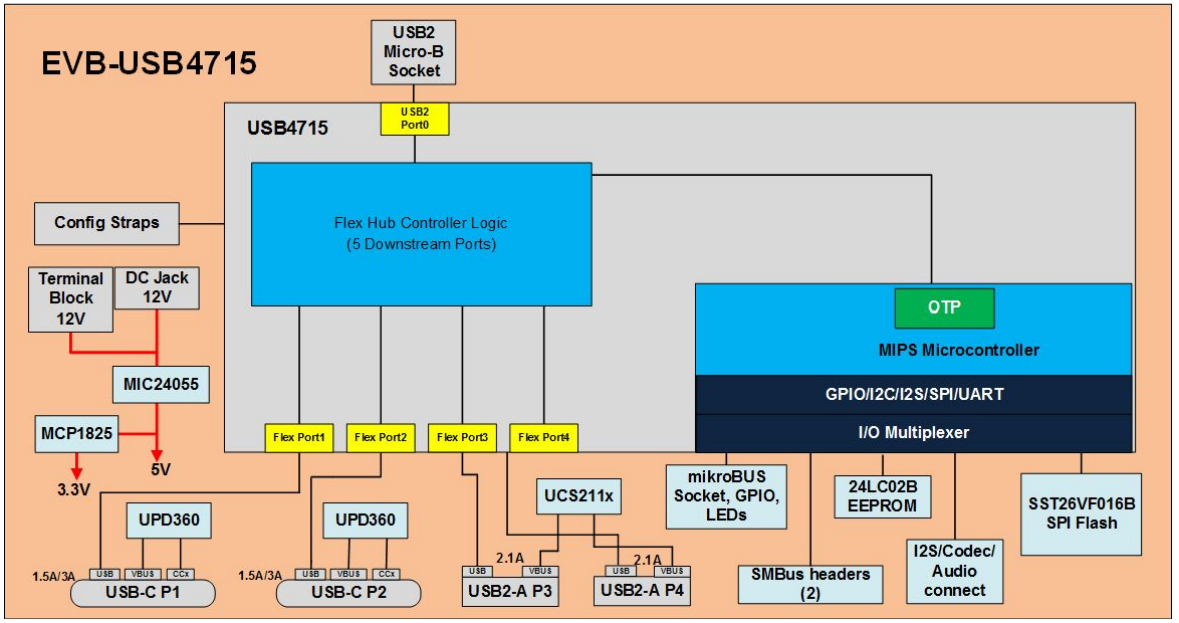

MICROCHIP — Microchip Technology, Inc. USB/Network Group - UNG www.Microchip.com — Designed with Altium

Description: EVB-USB4715 Evaluation Board for USB4715 QFN-48			
Page Title: Table of Contents, Revision History, Block Diagram			
Project Name: Gadir EVB-USB4715		PN: UNG_8080	
Size: B	Date: 6/20/2017	Designer: J. Hunt	Sheet 1 of 7	Rev B

© 2017 Microchip Technology Inc.

© 2017 Microchip Technology Inc.

FIGURE A-2: EVB-USB4715 SCHEMATIC (PAGE 2)

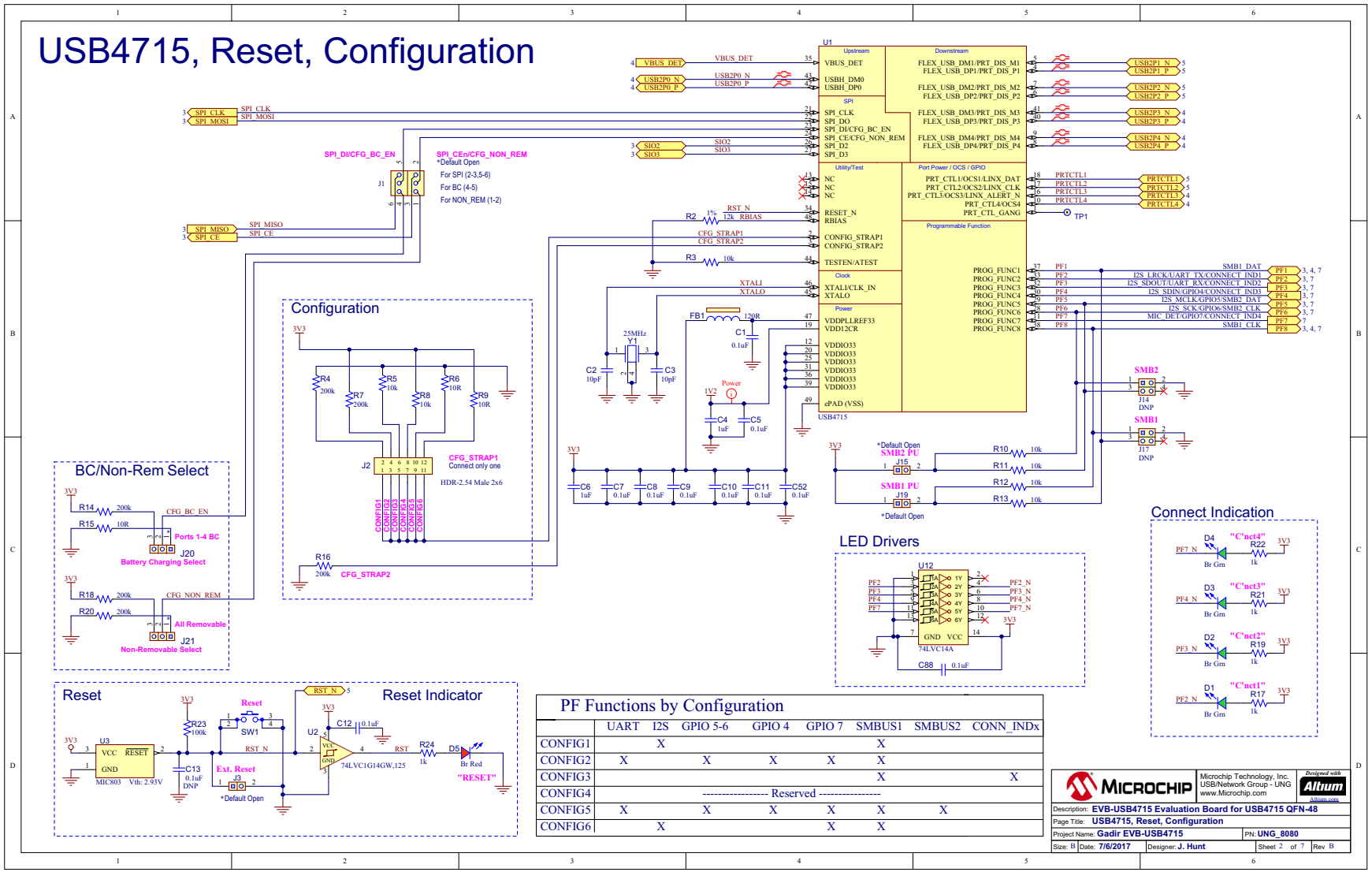

	UART	I2S	GPIO 5-6	GPIO 4	GPIO 7	SMBUS1	SMBUS2	CONN_INDx
CONFIG1		X				X		
CONFIG2	X		X	X	X	X		
CONFIG3						X		X
CONFIG4	---------- Reserved ----------							
CONFIG5	X		X	X	X	X	X	
CONFIG6		X			X	X		

FIGURE A-3: EVB-USB4715 SCHEMATIC (PAGE 3)

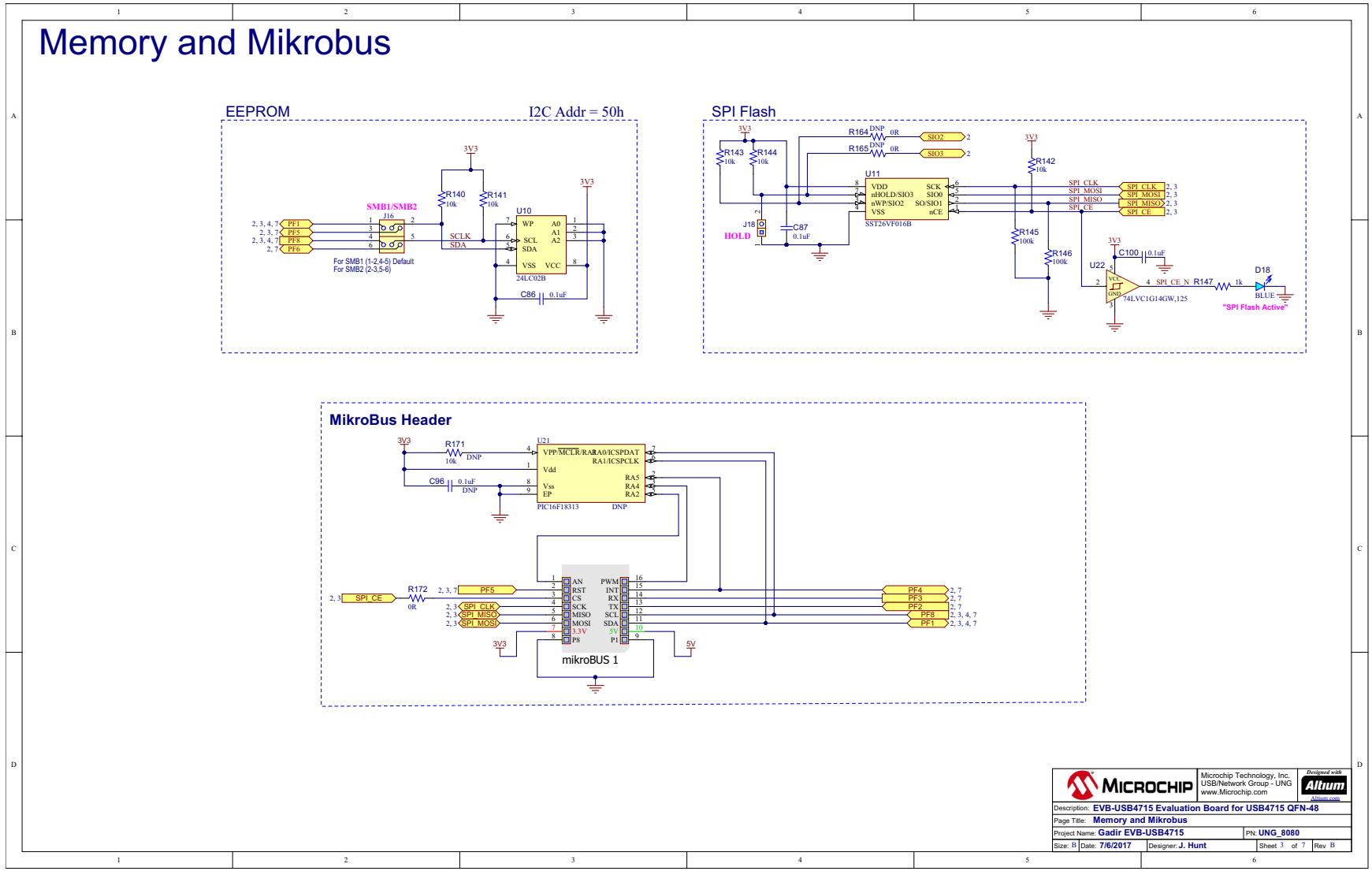

© 2017 Microchip Technology Inc.

FIGURE A-4: EVB-USB4715 SCHEMATIC (PAGE 4)

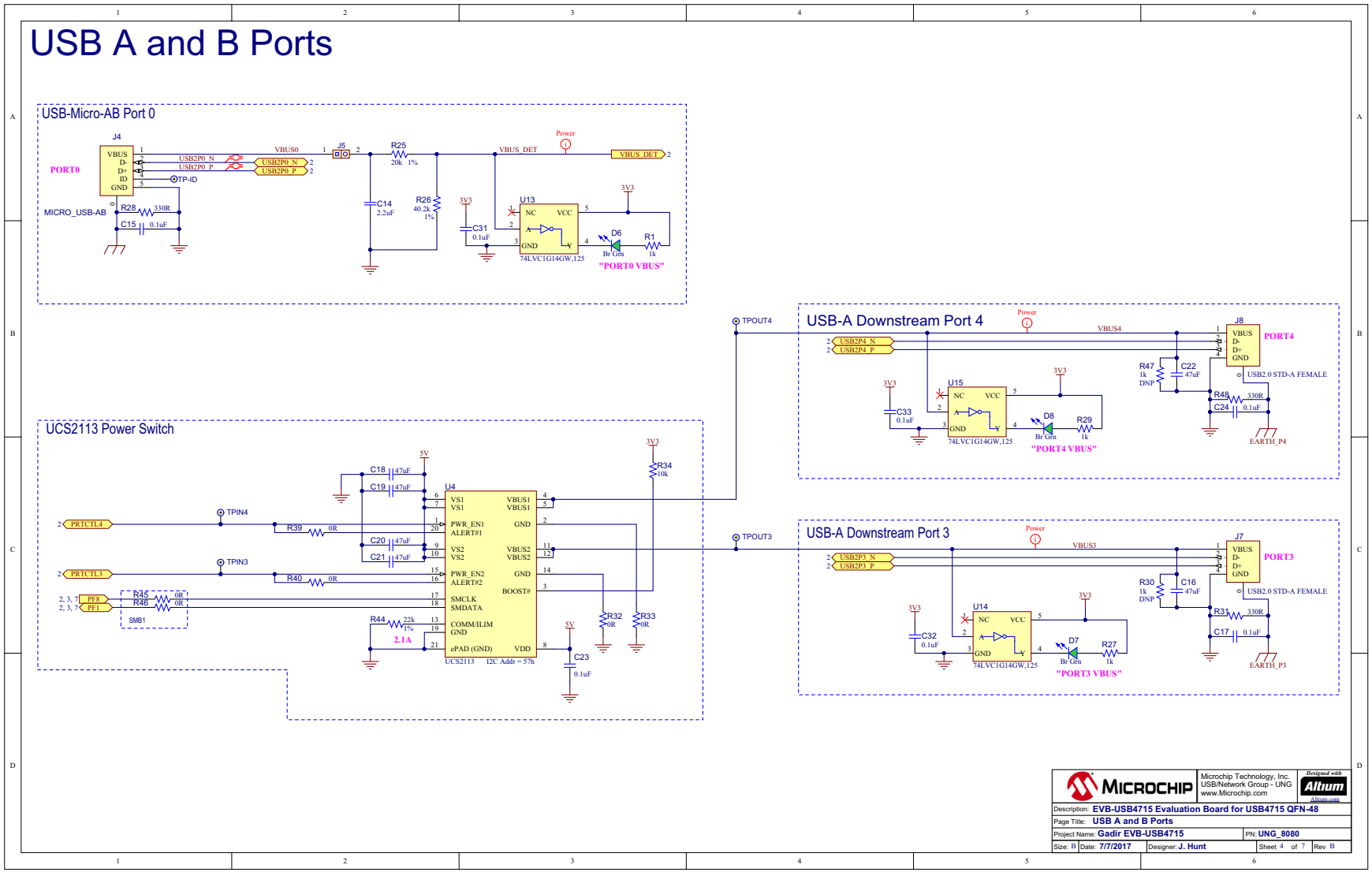

© 2017 Microchip Technology Inc.

FIGURE A-5: EVB-USB4715 SCHEMATIC (PAGE 5)

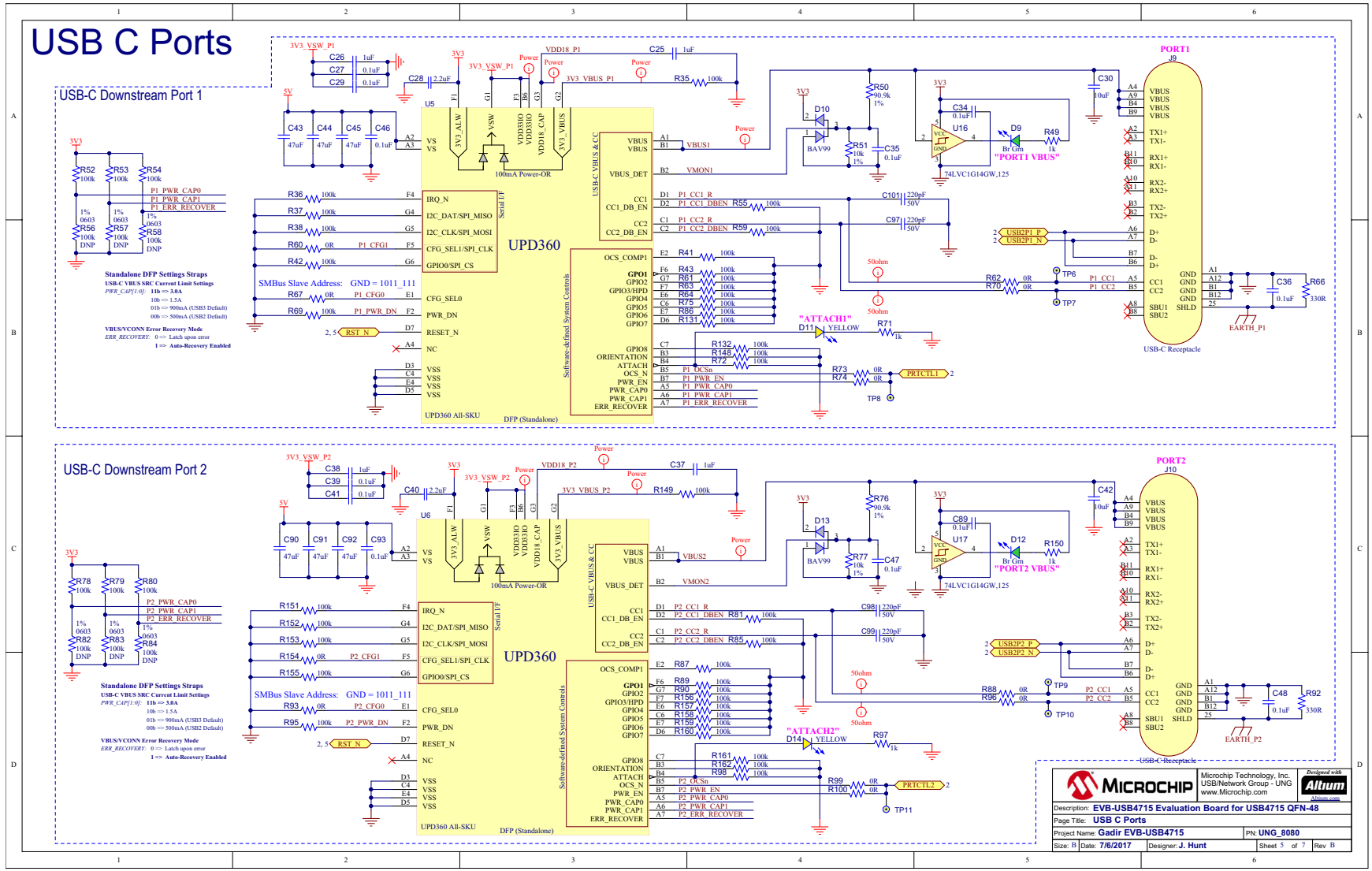

© 2017 Microchip Technology Inc.

© 2017 Microchip Technology Inc.

FIGURE A-6: EVB-USB4715 SCHEMATIC (PAGE 6)

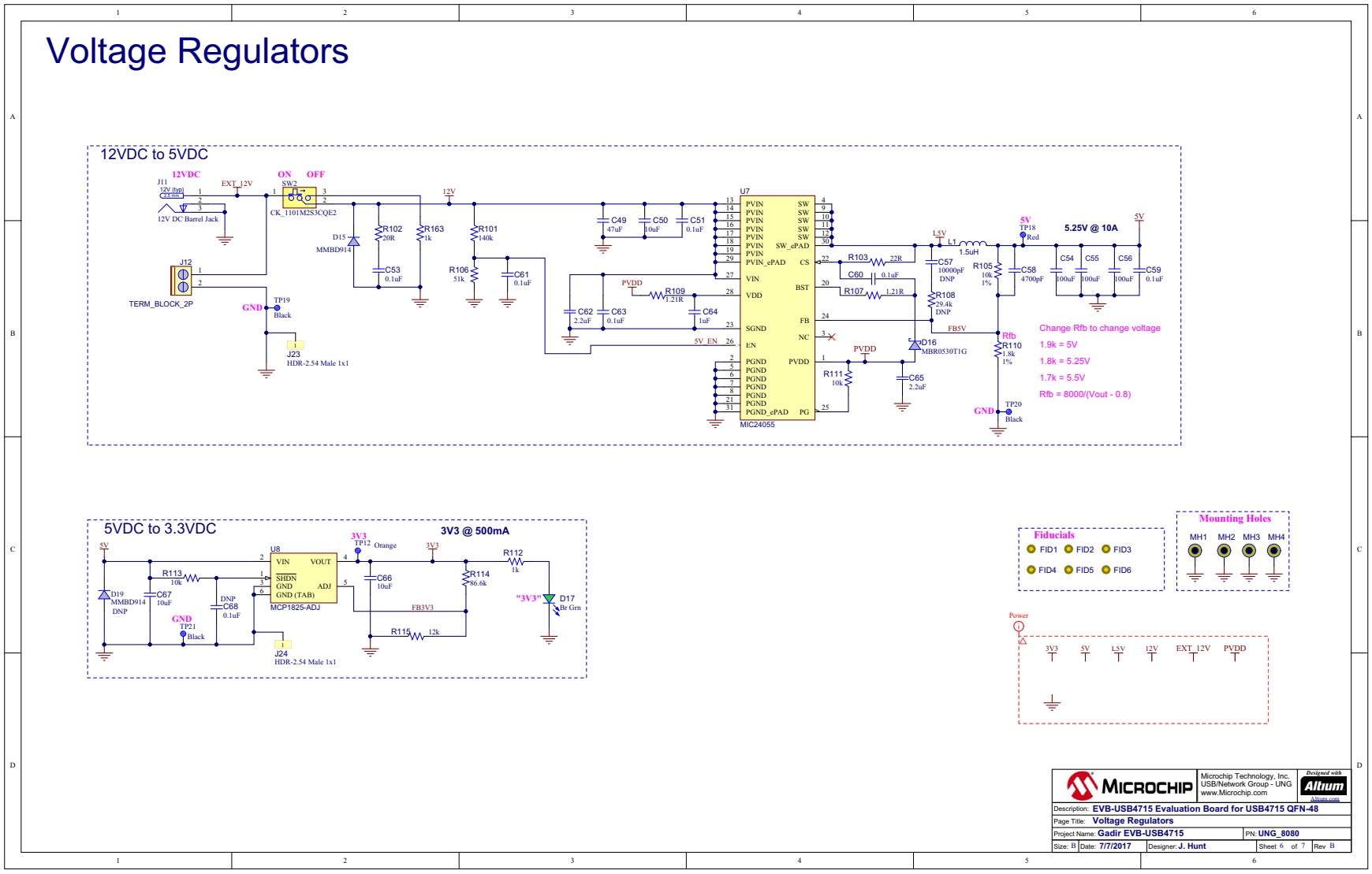

Appendix B. EVB-USB4715 BOM

B.1 INTRODUCTION

This appendix shows the EVB-USB4715 Evaluation Bill of Materials:

TABLE B-1: BILL OF MATERIALS

Reference Designator(s)	Description	Manufacturer	Manufacturer Part Number
C1, C5, C7, C8, C9, C10, C11, C12, C15, C17, C23, C24, C27, C29, C31, C32, C33, C34, C35, C36, C39, C41, C46, C47, C48, C51, C52, C53, C59, C60, C61, C63, C69, C70, C78, C80, C82, C83, C86, C87, C88, C89, C93, C94, C95, C100	CAP CER 0.1uF 16V 10% X7R SMD 0402	Murata	GRM155R71C104KA88D
C2, C3	CAP CER 10pF 50V 5% NP0 SMD 0402	Murata	GRM1555C1H100JZ01D
C4, C6, C25, C26, C37, C38, C64	CAP CER 1uF 10V 10% X5R SMD 0402	Murata Electronics North America	GRM155R61A105KE15D
C14, C28, C40, C62, C65	CAP CER 2.2UF 16V X5R 0402	TDK Corporation	C1005X5R1C225K050BC
C16, C18, C19, C20, C21, C22, C43, C44, C45, C49, C90, C91, C92	CAP CER 47uF 6.3V 20% X5R SMD 0805	Taiyo Yuden	JMK212BJ476MG-T
C30, C42, C50, C66, C67, C72, C74, C79, C81, C84, C85	CAP CER 10uF 16V 10% X5R SMD 0805	Wurth Electronics Inc	885012107014
C54, C55, C56	CAP CER 100UF 10V X5R 1210	Murata Electronics North America	GRM32ER61A107ME20L
C58	CAP CER 4700pF 16V 10% X7R SMD 0402	Murata Electronics North America	GRM155R71C472KA01D
C97, C98, C99, C101	CAP CER 220PF 5% 50V NP0 0402	Murata	GRM1555C1H221JA01D
D1, D2, D3, D4, D6, D7, D8, D9, D12, D17	LED, Bright Green, 0603	Lite-On	LTST-C191KGKT
D5	LED, Bright Red, 0603	Lite-On	LTST-C191KRKT
D10, D13	DIO RECTARR BAV99 1.25V 200mA 70V SOT-23-3	Fairchild	BAV99
D11, D14	DIO LED YELLOW 2.2V 25mA 3.4mcd Diffuse SMD 0603	Stanley Electric Co	AY1111C-TR
D15	DIODE SWITCHING 75V 0.2A SOT-23	Diodes Inc.	MMBD914-7-F
D16	DIO SCTKY MBR0530T1G 430mV 500mA 30V SOD-123	Diodes Incorporated	B0530W-7-F
D18	DIO LED BLUE 2.8V 20mA 15mcd Clear SMD 0603	Lite-On	LTST-C193TBKT-5A
FB1	FERRITE 600mA 120R SMD 0603	TDK Corporation	MMZ1608B121CTAH0
FB2	FERRITE 500mA 220R SMD 0603	Murata	BLM18AG221SN1D
J1, J16	CON HDR 2.54MM MALE 3x2 TH GOLD 5.84MH TH VERT	SAMTEC	TSW-102-07-G-T
J2	CON HDR-2.54 Male 2x6 Gold 5.84MH TH VERT	Samtec	TSW-106-07-G-D
J3, J5, J15, J18, J19	CONN HEADER 2POS .100" SGL GOLD	Samtec	TSW-102-07-G-S
J4	MICRO_USB-AB	JAE Electronics	DX4R205JJAR1800
J7, J8	CON USB2.0 STD-A FEMALE TH R/A	TE Connectivity AMP Connectors	292303-1
J9, J10	USB TYPE-C Conn Receptacle Top mount TH/SMT	Advanced Connector INC, (ACon)	NBR25-AKXX22
J11	CONN PWR JACK 2.5X5.5MM HIGH CUR	CUI	PJ-002BH
J12	Terminal Block 5.0MM PCB MOUNT 2P	TE Connectivity	282836-2

© 2017 Microchip Technology Inc.

TABLE B-1: BILL OF MATERIALS (CONTINUED)

Reference Designator(s)	Description	Manufacturer	Manufacturer Part Number
J13, J22	Connector, audio jack, 3.5mm, SMT, 4 pins	CUI Inc	SJ-3524-SMT
J23, J24	CON HDR-2.54 Male 1x1 Gold 5.84MH TH VERT	TE Connectivity	5-146280-1
L1	Power Inductor 1.5 uH 20% 11.1A, 5.7mOhms, shielded	Eaton	DR124-1R5-R
mikroBUS 1	mikroBUS Host Socket - SMD (std)	3M	963108-2000-AR-PR
R1, R17, R19, R21, R22, R24, R27, R29, R49, R71, R97, R112, R117, R120, R147, R150, R163	RES TKF 1k 1% 1/10W SMD 0603	Panasonic	ERJ-3EKF1001V
R2, R115	RES TKF 12k 1% 1/10W SMD 0603	Yageo	RC0603FR-0712KL
R3, R5, R8, R10, R11, R12, R13, R34, R105, R111, R113, R140, R141, R142, R143, R144	RES TKF 10k 1% 1/10W SMD 0603	ROHM	MCR03EZPFX1002
R4, R7, R14, R16, R18, R20	RES TKF 200k 1% 1/10W SMD 0603	Panasonic	ERJ-3EKF2003V
R6, R9, R15	RES TKF 10R 1% 1/10W SMD 0603	Panasonic	ERJ-3EKF10R0V
R23, R35, R36, R37, R38, R41, R42, R43, R52, R53, R54, R55, R59, R61, R63, R64, R69, R72, R75, R78, R79, R80, R81, R85, R86, R87, R89, R90, R95, R98, R131, R132, R145, R146, R148, R149, R151, R152, R153, R155, R156, R157, R158, R159, R160, R161, R162	RES TKF 100k 1% 1/10W SMD 0603	Panasonic	ERJ-3EKF1003V
R25	RES TKF 20k 1% 1/10W SMD 0603	Panasonic	ERJ-3EKF2002V
R26	RES TKF 40.2k 1% 1/10W SMD 0603	Yageo	RC0603FR-0740K2L
R28, R31, R48, R66, R92	RES TKF 330R 1% 1/10W SMD 0603	Panasonic	ERJ-3EKF3300V
R32, R33, R39, R40, R45, R46, R60, R62, R67, R68, R70, R73, R74, R88, R93, R96, R99, R100, R119, R121, R123, R124, R125, R127, R130, R133, R134, R139, R154, R166, R167, R168, R172	RES TKF 0R 1/10W SMD 0603	Panasonic	ERJ-3GSY0R00V
R44	RES TKF 22k 1% 1/10W SMD 0603	Panasonic	ERJ-3EKF2202V
R50, R76	RES TKF 90.9k 1% 1/10W SMD 0603	Panasonic	ERJ-3EKF9092V
R51, R77	RES TKF 5.1k 1% 1/10W SMD 0603	Panasonic	ERJ-3EKF5101V
R101	RES TKF 140k 1% 1/10W SMD 0603	Panasonic	ERJ-3EKF1403V
R102	RES TF 20R 1% 1/16W SMD 0603	Stackpole Electronics Inc	RNCP0603FTD20R0
R103	RES TKF 22R 1% 1/10W SMD 0603	Panasonic Electronic Components	ERJ-3EKF22R0V
R106	RES TKF 51k 1% 1/10W SMD 0603	Panasonic	ERJ-3EKF5102V
R107, R109	RES TKF 1.21R 1% 1/10W SMD 0603	Vishay Dale	CRCW06031R21FKEA
R110	RES TKF 1.8k 1% 1/10W SMD 0603	Panasonic	ERJ-3EKF1801V
R114	RES TKF 86.6k 1% 1/10W SMD 0603	Panasonic Electronic Components	ERJ-3EKF8662V
R116	RES TKF 499k 1% 1/10W SMD 0603	Panasonic	ERJ-3EKF4993V
R118, R122	RES TKF 49.9k 1% 1/10W SMD 0603	Panasonic	ERJ-3EKF4992V
R136	RES TKF 33R 1% 1/10W SMD 0603	ROHM	MCR03EZPFX33R0
SW1	SWITCH TACTILE SPST-NO 0.05A 16V	C&K Components	CKN10502CT-ND
SW2	SWITCH SLIDE SPDT 6A 120	C&K Components	1101M2S3CQE2
SW3	SWITCH SLIDE DPDT 6V 300MA JS202011CQN TH	C&K Components	JS202011CQN
TP12	TEST POINT PC MINI .040"D ORANGE	Keystone Electronics	5003
TP18	TEST POINT PC MINI .040"D RED	Keystone Electronics	5000
TP19, TP20, TP21	TEST POINT PC MINI .040"D BLACK	Keystone Electronics	5001
U2, U13, U14, U15, U16, U17, U22	74LVC1G14GW,125 SCHMITT-TRG INVERTER	NXP	74LVC1G14GW,125
U9, U18	Microphone, Zero-Height, Digital-PDM, SMT, bottom port	Knowles	SPH0641LU4H-1
U12	IC BUFFER SCHMITT TRIG HEX INVERTER SOIC-14	NXP Semiconductors	74LVC14AD,118

© 2017 Microchip Technology Inc.

TABLE B-1: BILL OF MATERIALS (CONTINUED)

Reference Designator(s)	Description	Manufacturer	Manufacturer Part Number
U19	IC, 24-bit Stereo Audio Codec, LFCSP_VQ, 32 pin	Analog Devices Inc.	ADAU1961WBCPZ
OSC1	HCMOS Oscillator, 3.3V, 12.288MHz, SMD, 5mmx3.2mm	Abracon LLC	ASFL1-12.288MHZ-L-T
Y1	Crystal 25MHz 4 pins 3225	Abracon LLC	ABM8G-25-B4Y-T
Microchip Parts			
U1	IC, USB4715, Automotive USB 2.0 Hub, QFN48	Microchip Technology	USB4715
U3	IC, Reset Supervisor, 2.93V, SOT23-3	Microchip Technology	MIC803-29D4VM3
U4	USB Dual Port Power Switch and Current Monitor	Microchip Technology	UCS2113-1-V/G4
U5, U6	USB-C Port Power Controller with PD, 5V, 3A, BGA44	Microchip Technology	UPD360/A_BGA44
U7	IC, 4.5V to 19V input, 12A, 600kHz Buck Regulator with adjustable output 0.8V to 5.5V, power good signal	Microchip Technology (Micrel)	MIC24055YJL
U8	IC, LDO ADJ, 2.3 to 6Vin, 0.8V to 5V out, 0.5A	Microchip Technology	MCP1825T-ADJE/DC
U10	MCHP MEMORY SERIAL EEPROM 2k I2C 24LC02B/SN SOIC-8	Microchip	24LC02BT/SN
U11	Flash Serial, SPI, 2.7-3.6V, x1/x2/x4, SOIC8	Microchip Technology	ST26VF016B104ISM
Not Populated			
RUBBER FEET	Foot, Silicone Rubber, Adhesive, Black, Cylindrical, .312"x.215"	3M	SJ61A6
RUBBER FEET	Foot, Silicone Rubber, Adhesive, Clear, Cylindrical, .500"x.250"	Richco	RBS-6
C13, C68, C71, C73, C75, C96	CAP CER 0.1uF 16V 10% X7R SMD 0402	Murata	GRM155R71C104KA88D
C57	CAP CER 10000pF 16V 10% X7R SMD 0402	Murata	GRM155R71C103KA01D
C76, C77	CAP CER 10uF 16V 10% X5R SMD 0805	Wurth Electronics Inc	885012107014
D19	DIODE SWITCHING 75V 0.2A SOT-23	Diodes Inc	MMBD914-7-F
J14, J17, J25	CONN HEADER 4POS .100" DUAL GOLD	Samtec	TSW-102-07-G-D
J20, J21	CON HDR-2.54 MALE 1x3 GOLD 5.84MH TH VERT	Samtec	TSW-103-07-G-S
R30, R47	RES TKF 1k 1% 1/10W SMD 0603	Panasonic	ERJ-3EKF1001V
R56, R57, R58, R82, R83, R84	RES TKF 100k 1% 1/10W SMD 0603	Panasonic	ERJ-3EKF1003V
R108	RES TKF 29.4K 1% 1/10W SMD 0603	Panasonic Electronic Components	ERJ-3EKF2942V
R126, R135, R137, R138, R169, R170, R171	RES TKF 10k 1% 1/10W SMD 0603	ROHM	MCR03EZPFX1002
R128, R129, R164, R165	RES TKF 0R 1/10W SMD 0603	Panasonic	ERJ-3GSY0R00V
U21	MCHP MCU 8-BIT 32MHz 3.5kB 256B PIC16F18313-I/RF UDFN-8	Microchip	PIC16F18313-I/RF

Appendix C. EVB-USB4715 PCB Silk Screens

C.1 INTRODUCTION

This appendix shows the Top and Bottom Silk Screen Images.

FIGURE C-1: EVB-USB5926 TOP SILK SCREEN IMAGE

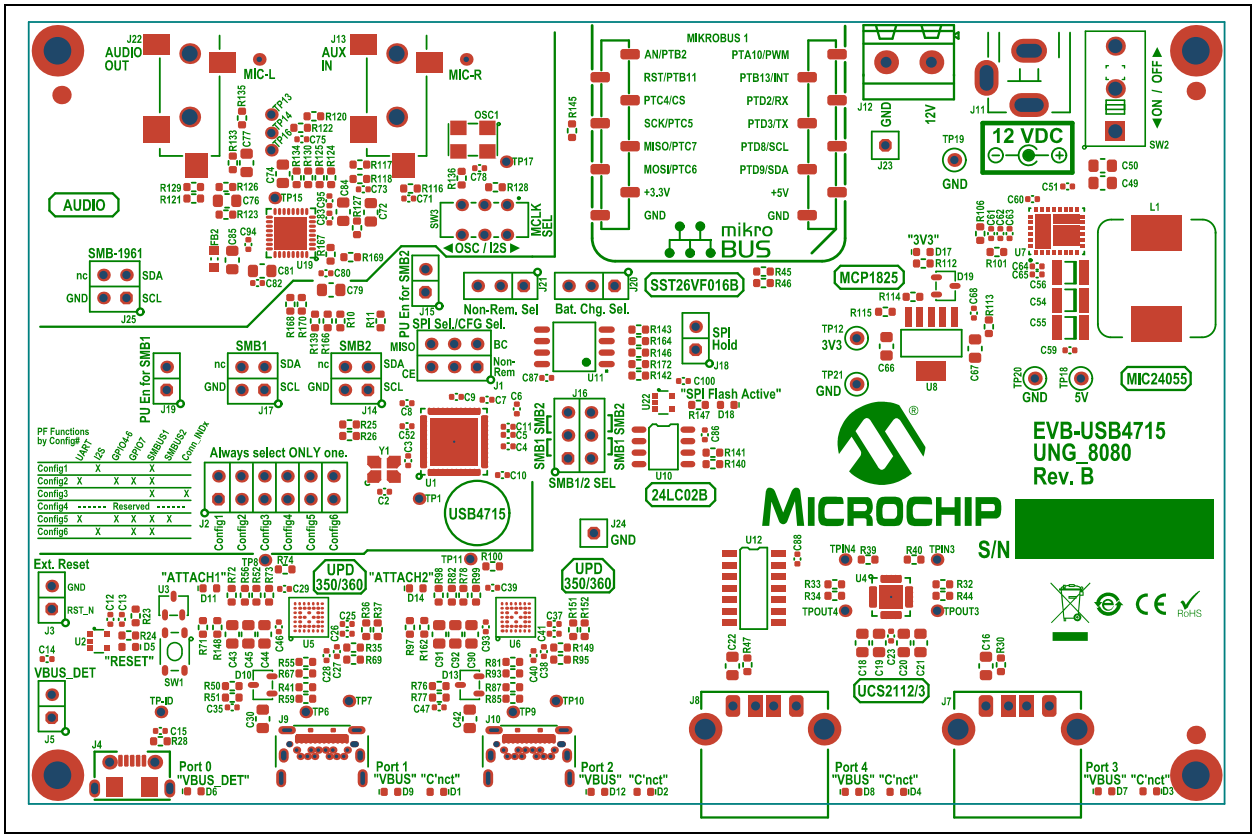

FIGURE C-2: EVB-USB5926 BOTTOM SILK SCREEN IMAGE

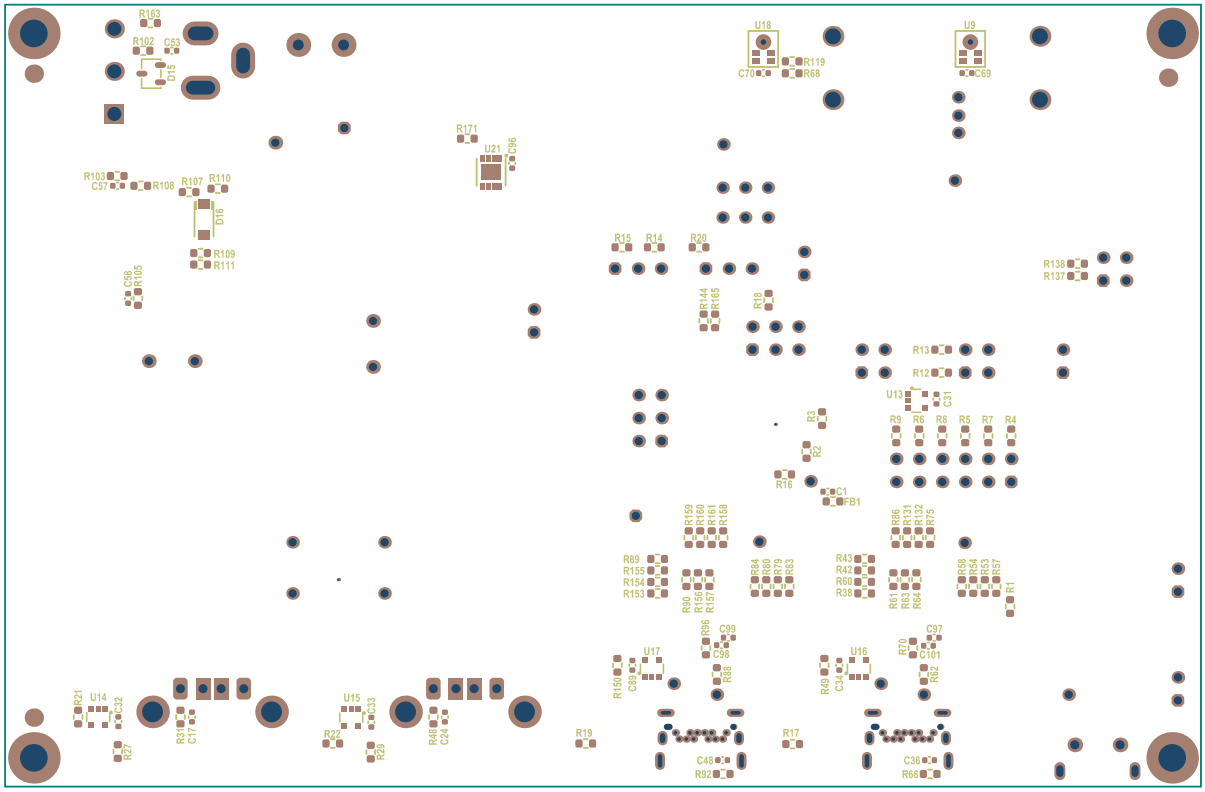

Worldwide Sales and Service

AMERICAS

Corporate Office
2355 West Chandler Blvd.
Chandler, AZ 85224-6199
Tel: 480-792-7200
Fax: 480-792-7277
Technical Support:
http://www.microchip.com/support
Web Address:
www.microchip.com

Atlanta
Duluth, GA
Tel: 678-957-9614
Fax: 678-957-1455

Austin, TX
Tel: 512-257-3370

Boston
Westborough, MA
Tel: 774-760-0087
Fax: 774-760-0088

Chicago
Itasca, IL
Tel: 630-285-0071
Fax: 630-285-0075

Dallas
Addison, TX
Tel: 972-818-7423
Fax: 972-818-2924

Detroit
Novi, MI
Tel: 248-848-4000

Houston, TX
Tel: 281-894-5983

Indianapolis
Noblesville, IN
Tel: 317-773-8323
Fax: 317-773-5453
Tel: 317-536-2380

Los Angeles
Mission Viejo, CA
Tel: 949-462-9523
Fax: 949-462-9608
Tel: 951-273-7800

Raleigh, NC
Tel: 919-844-7510

New York, NY
Tel: 631-435-6000

San Jose, CA
Tel: 408-735-9110
Tel: 408-436-4270

Canada - Toronto
Tel: 905-695-1980
Fax: 905-695-2078

ASIA/PACIFIC

Asia Pacific Office
Suites 3707-14, 37th Floor
Tower 6, The Gateway
Harbour City, Kowloon

Hong Kong
Tel: 852-2943-5100
Fax: 852-2401-3431

Australia - Sydney
Tel: 61-2-9868-6733
Fax: 61-2-9868-6755

China - Beijing
Tel: 86-10-8569-7000
Fax: 86-10-8528-2104

China - Chengdu
Tel: 86-28-8665-5511
Fax: 86-28-8665-7889

China - Chongqing
Tel: 86-23-8980-9588
Fax: 86-23-8980-9500

China - Dongguan
Tel: 86-769-8702-9880

China - Guangzhou
Tel: 86-20-8755-8029

China - Hangzhou
Tel: 86-571-8792-8115
Fax: 86-571-8792-8116

China - Hong Kong SAR
Tel: 852-2943-5100
Fax: 852-2401-3431

China - Nanjing
Tel: 86-25-8473-2460
Fax: 86-25-8473-2470

China - Qingdao
Tel: 86-532-8502-7355
Fax: 86-532-8502-7205

China - Shanghai
Tel: 86-21-3326-8000
Fax: 86-21-3326-8021

China - Shenyang
Tel: 86-24-2334-2829
Fax: 86-24-2334-2393

China - Shenzhen
Tel: 86-755-8864-2200
Fax: 86-755-8203-1760

China - Wuhan
Tel: 86-27-5980-5300
Fax: 86-27-5980-5118

China - Xian
Tel: 86-29-8833-7252
Fax: 86-29-8833-7256

ASIA/PACIFIC

China - Xiamen
Tel: 86-592-2388138
Fax: 86-592-2388130

China - Zhuhai
Tel: 86-756-3210040
Fax: 86-756-3210049

India - Bangalore
Tel: 91-80-3090-4444
Fax: 91-80-3090-4123

India - New Delhi
Tel: 91-11-4160-8631
Fax: 91-11-4160-8632

India - Pune
Tel: 91-20-3019-1500

Japan - Osaka
Tel: 81-6-6152-7160
Fax: 81-6-6152-9310

Japan - Tokyo
Tel: 81-3-6880- 3770
Fax: 81-3-6880-3771

Korea - Daegu
Tel: 82-53-744-4301
Fax: 82-53-744-4302

Korea - Seoul
Tel: 82-2-554-7200
Fax: 82-2-558-5932 or
82-2-558-5934

Malaysia - Kuala Lumpur
Tel: 60-3-6201-9857
Fax: 60-3-6201-9859

Malaysia - Penang
Tel: 60-4-227-8870
Fax: 60-4-227-4068

Philippines - Manila
Tel: 63-2-634-9065
Fax: 63-2-634-9069

Singapore
Tel: 65-6334-8870
Fax: 65-6334-8850

Taiwan - Hsin Chu
Tel: 886-3-5778-366
Fax: 886-3-5770-955

Taiwan - Kaohsiung
Tel: 886-7-213-7830

Taiwan - Taipei
Tel: 886-2-2508-8600
Fax: 886-2-2508-0102

Thailand - Bangkok
Tel: 66-2-694-1351
Fax: 66-2-694-1350

EUROPE

Austria - Wels
Tel: 43-7242-2244-39
Fax: 43-7242-2244-393

Denmark - Copenhagen
Tel: 45-4450-2828
Fax: 45-4485-2829

Finland - Espoo
Tel: 358-9-4520-820

France - Paris
Tel: 33-1-69-53-63-20
Fax: 33-1-69-30-90-79

France - Saint Cloud
Tel: 33-1-30-60-70-00

Germany - Garching
Tel: 49-8931-9700

Germany - Haan
Tel: 49-2129-3766400

Germany - Heilbronn
Tel: 49-7131-67-3636

Germany - Karlsruhe
Tel: 49-721-625370

Germany - Munich
Tel: 49-89-627-144-0
Fax: 49-89-627-144-44

Germany - Rosenheim
Tel: 49-8031-354-560

Israel - Ra'anana
Tel: 972-9-744-7705

Italy - Milan
Tel: 39-0331-742611
Fax: 39-0331-466781

Italy - Padova
Tel: 39-049-7625286

Netherlands - Drunen
Tel: 31-416-690399
Fax: 31-416-690340

Norway - Trondheim
Tel: 47-7289-7561

Poland - Warsaw
Tel: 48-22-3325737

Romania - Bucharest
Tel: 40-21-407-87-50

Spain - Madrid
Tel: 34-91-708-08-90
Fax: 34-91-708-08-91

Sweden - Gothenberg
Tel: 46-31-704-60-40

Sweden - Stockholm
Tel: 46-8-5090-4654

UK - Wokingham
Tel: 44-118-921-5800
Fax: 44-118-921-5820

© 2017 Microchip Technology Inc.