One Technology Way • P.O. Box 9106 • Norwood, MA 02062-9106, U.S.A. • Tel: 781.329.4700 • Fax: 781.461.3113 • www.analog.com

Evaluating the ADE9078 High Performance, Polyphase Energy Metering Analog Front End (AFE)

FEATURES

- Full featured evaluation board for the ADE9078
- PC control in conjunction with the system demonstration platform (EVAL-SDP-CB1Z)
- PC software for control and data analysis (time and frequency domain)
- Standalone capability

EVALUATION KIT CONTENTS

- ADE9078 evaluation board

ADDITIONAL EQUIPMENT NEEDED

- EVAL-SDP-CB1Z (must be ordered separately)
  - Includes a mini USB cable
- Current transformers or Rogowski coils for 3-phase current channels and the neutral channel
- Precision current and voltage signal source
- PC running Windows XP SP2, Windows Vista, or Windows 7 with USB 2.0 port

AVAILABLE RESOURCES

- Documents
  - ADE9078 data sheet
  - EVAL-ADE9078EBZ user guide
- Required software
  - EVAL-ADE9078EBZ evaluation software
- Design and integration files
  - Schematics, layout files, and bill of materials

GENERAL DESCRIPTION

The EVAL-ADE9078EBZ evaluation board allows the performance of the ADE9078 energy metering IC to be evaluated in a context very close to an actual 3-phase meter implementation. The kit requires purchasing a second board, the controller board for the system demonstration platform (EVAL-SDP-CB1Z). The ADE9078 evaluation kit includes evaluation software, written in LabVIEW®, that provides access to the registers and features of the device using a PC interface.

Consult the ADE9078 data sheet in conjunction with this user guide when using the evaluation board.

TYPICAL EVALUATION BOARD SETUP

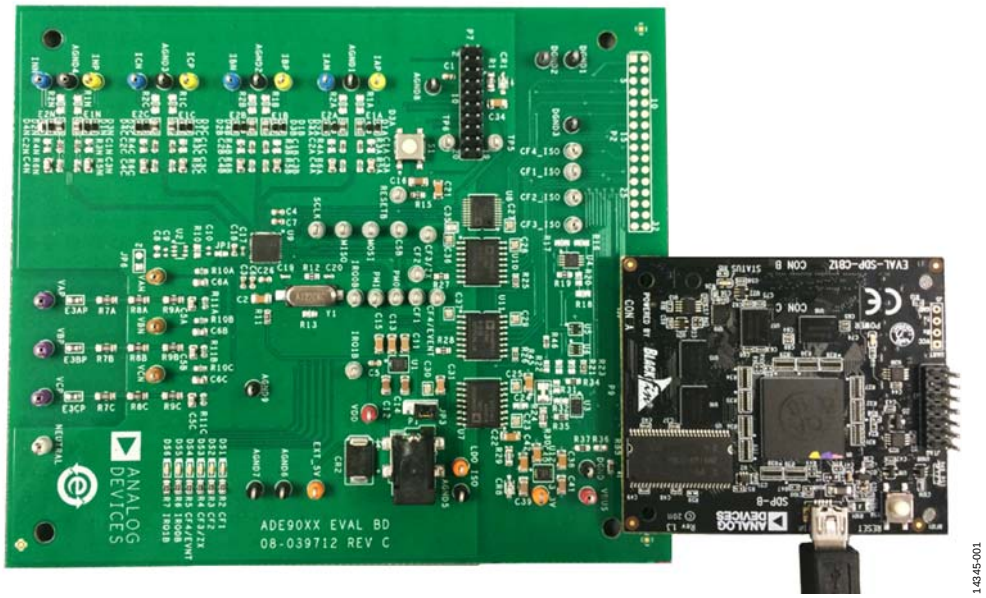

Figure 1. The EVAL-ADE9078EBZ (on the Left) Connected to the EVAL-SDP-CB1Z SDP Interface Board (on the Right)

TABLE OF CONTENTS

Features 1
Evaluation Kit Contents 1
Additional Equipment Needed 1
Available Resources 1
General Description 1
Typical Evaluation Board Setup 1
Revision History 2
Evaluation Kit Connection Diagram 3
Evaluation Board Hardware 4
Overview 4
Powering Up the Evaluation Boards 4
Analog Inputs 4
Setting Up the Evaluation Board as an Energy Meter 5
Evaluation Board Software 7
Installing the Drivers 7
Installing and Uninstalling the ADE9078 Software 7
Front Panel 7
Evaluation Software Functions 9
Read/Write registers Button 9
Powers and Energies 13
RMS Window 16
Waveform Buffer Window 18
Angle Window 19
Quick Startup Window 20
Interrupts Window 22
Power Quality Window 23
Troubleshooting 25
Evaluation Board Schematics and Artwork 26
Ordering Information 31
Bill of Materials 31

REVISION HISTORY

9/2016—Revision 0: Initial Version

EVALUATION KIT CONNECTION DIAGRAM

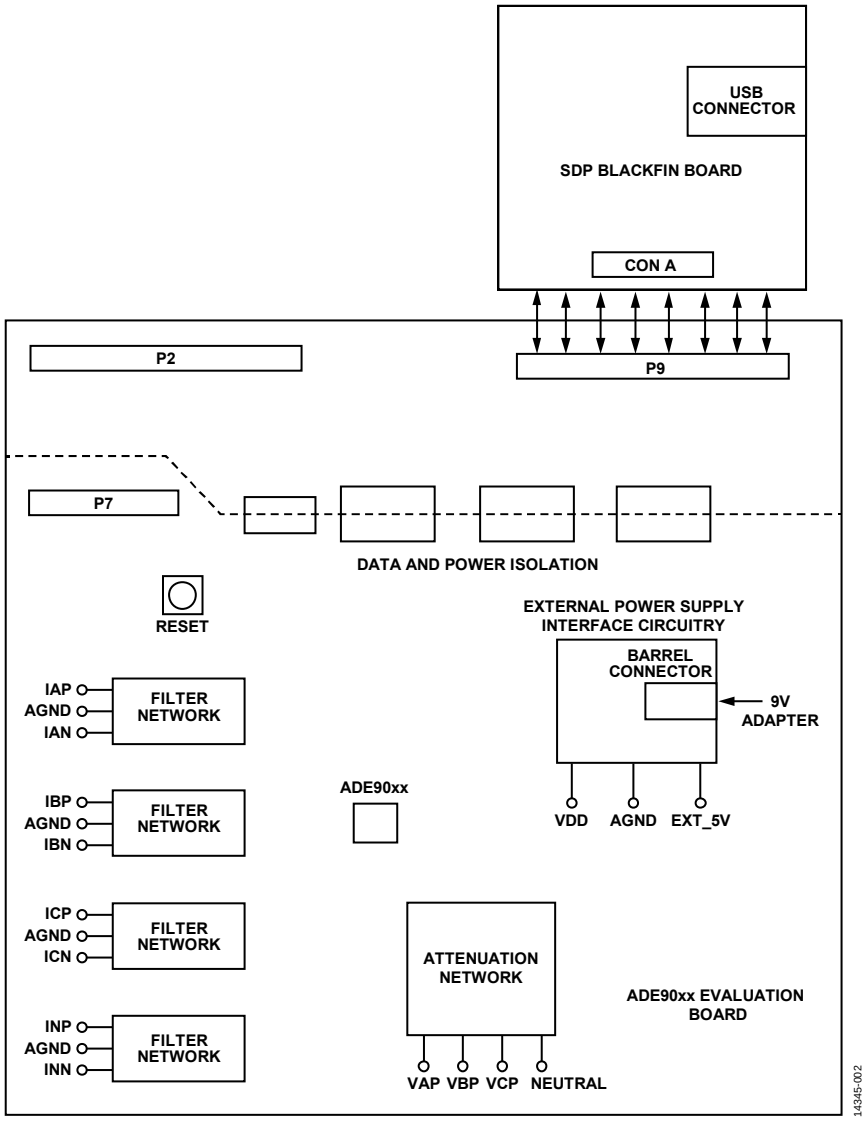

Figure 2.

EVALUATION BOARD HARDWARE

OVERVIEW

The EVAL-ADE9078EBZ and the EVAL-SDP-CB1Z boards are both required to evaluate the ADE9078.

Order the EVAL-SDP-CB1Z when ordering the EVAL-ADE9078EBZ evaluation board; the evaluation kit and the EVAL-SDP-CB1Z are purchased and packaged separately, but must be used together.

The EVAL-ADE9078EBZ board is connected to the Blackfin® SDP board (also referred to as SDP-B or EVAL-SDP-CB1Z) using the 120-pin connector, P9, on the ADE9078 evaluation board. The EVAL-SDP-CB1Z consists of an ADSP-BF527 microcontroller that handles all the communications from the PC to the ADE9078 device that populates the evaluation board

POWERING UP THE EVALUATION BOARDS

To power up the ADE9078 evaluation board, it is required to either connect an external 3.3 V power supply to the VDD test point, connect a 5 V power supply to the EXT_5V test point, or connect a 9 V dc adapter to the barrel connector on the board.

Power the ADE9078 externally by connecting a 3.3 V supply to the VDD test point or a 5 V to 16 V dc supply to the EXT_5V test point or barrel jack. When using an external supply, connect Pin 1 and Pin 2 at J3. Connect Pin 2 and Pin 3 to power the ADE9078 with internal isolated power from the SDP-B board.

ANALOG INPUTS

Current and voltage signals are connected at the test pins placed on the evaluation board. All analog input signals are filtered using the on-board antialiasing filters before the signals are connected to the ADE9078. The components used on the board are the recommended values to be used with the ADE9078.

Current Sense Inputs—the IAP, IAN, IBP, IBN, ICP, ICN, INP, and INN Test Pins

Figure 3 shows the structure used for the Phase A current channel in the evaluation board. The same signal path is used for the other current channels. Therefore, the explanation in this section applies to other current channels on the evaluation board, such as Phase B, Phase C, and the neutral phase.

E1A and E2A are ferrite beads that filter any high frequency noise present on the wires. Immediately following the ferrite beads, there are four protection diodes per current channel used for overcurrent protection. The antialiasing filter network appears after the protection network.

The signal path board configurations for the current transformer and the Rogowski coil sensors are different from each other. Figure 4 shows an example of a current transformer sensor configuration. The burden resistors, R1A and R2A, are populated per the full-scale current and the current transformer turns ratio of the application. The C1A and C2A capacitors are not populated because only one stage of the RC filter is sufficient in this configuration. The RC filter combination of 1 kΩ and 22 nF provides a low-pass filter with a cutoff frequency of 7.2 kHz. The current transformer turns ratio and the burden resistor values must be chosen such that the IAP to AGND and IAN to AGND potentials do not exceed ±0.5 V peak.

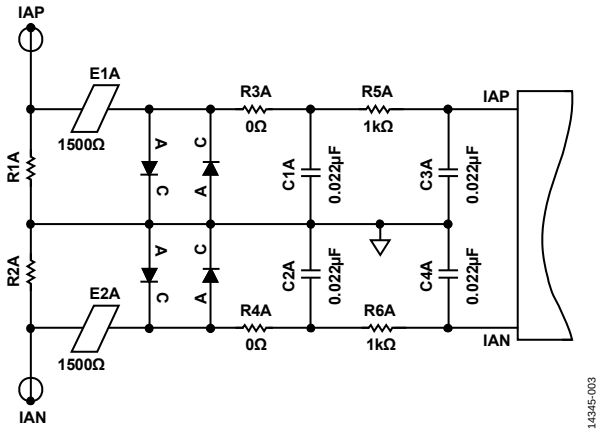

Figure 3. Phase A Current Input Structure on the Evaluation Board

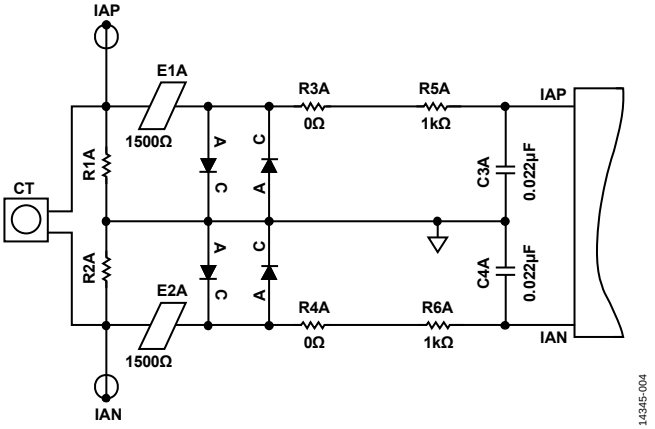

Figure 4. Example of a Current Transformer Connection

Figure 5 shows an example of a configuration using a Rogowski coil current sensor. The burden resistors, R1A and R2A, are not used in this configuration and are therefore removed from the board. Because Rogowski coil sensors have a gain that increases with frequency (20 dB/decade), the high frequency components of the current signal are amplified by a larger factor. Therefore, two stages of RC filtering are required to attenuate the high frequency components and to avoid aliasing. The R3A and R4A resistors must be 100 Ω and are used in conjunction with the C1A and C2A capacitors to form a low-pass filter with a cutoff frequency of 72 kHz. This first stage is followed by the 1 kΩ/22 nF RC filter combination that provides a cutoff frequency of 7.2 kHz. The Rogowski coil must be chosen such that the IAP to AGND and IAN to AGND potentials do not exceed ±0.5 V peak.

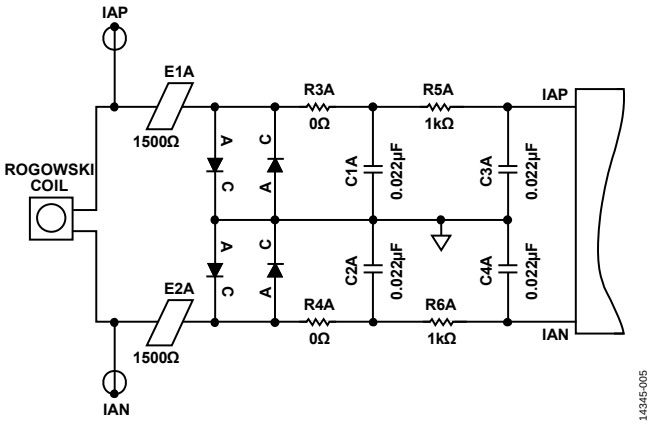

Figure 5. Example of a Rogowski Coil Connection

Phase Voltage Sense Inputs—the VAP and VAN, VBP and VBN, and VCP and VCN Test Pins

Figure 6 shows the Phase A voltage channel signal path on the evaluation board. The same signal path is also replicated on the Phase B and Phase C channels; therefore, the description in this section applies to Phase B and Phase C channels.

E3AP is a ferrite bead that filters any high frequency noise present on the wires. There are three 330 kΩ resistors connected in series, forming an attenuation network with a 1 kΩ resistor, R11A. This setup provides an attenuation ratio of 990:1. The R11A and C5A RC combination and the R10A and C6A RC combination have the same cutoff frequency as that of the RC filters used on the current channels. This matching is essential to avoid large phase errors between the voltage and current signals. If a different attenuation ratio is preferred, replace the R7A, R8A, and R9A resistors with alternate resistors. The resistors must be chosen such that the maximum signal at the VAP pin is ±0.5 V peak with respect to AGND. The Phase A line is connected to the VAP test point and the neutral line (in the case of the 3-phase, 4-wire wye configuration) is connected to the NEUTRAL test point. The NEUTRAL test point is tied to the AGND potential of the ADE9078.

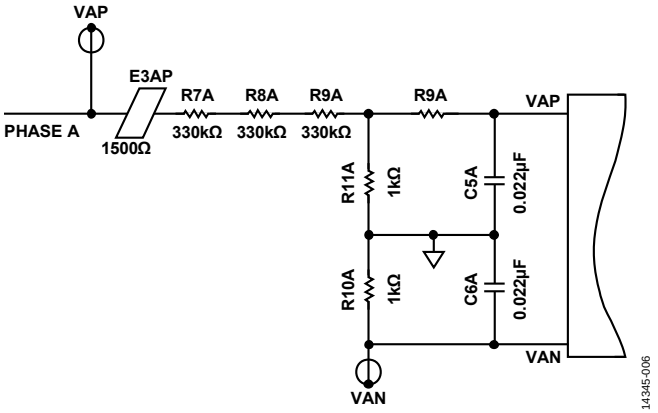

Figure 6. Phase A Voltage Input Structure on the Evaluation Board

SETTING UP THE EVALUATION BOARD AS AN ENERGY METER

Figure 7 shows a typical setup for the ADE9078 evaluation board. In this example, an energy meter for a 3-phase, 4-wire, wye distribution system is shown. Current transformers sense the phase currents and are connected as shown in Figure 7. The line voltages are connected directly to the board as shown. The board is supplied from one power supply (see the Powering Up the Evaluation Boards section for more information).

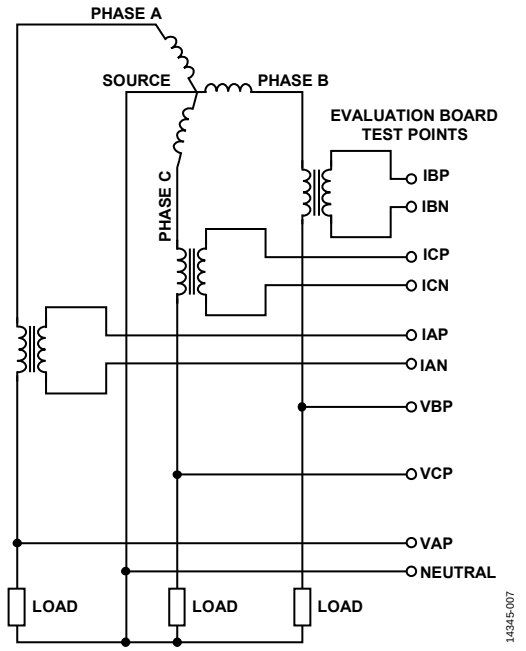

Figure 7. Typical Setup for the ADE9078 Evaluation Board for 3-Phase, 4-Wire, Wye Distribution System

Figure 8 shows a typical setup for the ADE9078 evaluation board as an energy meter for a 3-phase, 3-wire, delta distribution system. The Phase B voltage is considered a reference and is therefore tied to the NEUTRAL test point on the evaluation board.

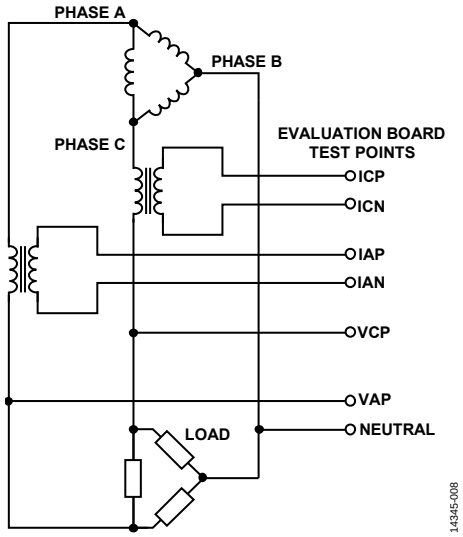

Figure 8. Typical Setup for the ADE9078 Evaluation Board for a 3-Phase, 3-Wire, Delta Distribution System

Using the Evaluation Board with Another Microcontroller

It is possible to manage the ADE9078 evaluation board with a different microcontroller mounted on another board. The evaluation board can be connected to this second board through the P2 connector. The SDP Blackfin board, in this case, is unused and not connected. If nonisolated signals are to be used with the external microcontroller, then the P7 connector can be used. In this case, the U7, U8, U10, and U11 isolators must be removed from the ADE9078 evaluation board. Note that P2 and P9 have isolated signals, whereas P4 is nonisolated.

EVALUATION BOARD SOFTWARE

The EVAL-ADE9078EBZ is supported by Windows®-based software that allows the user to access all the functionality of the ADE9078. The software communicates with the SDP Blackfin board using the USB. The SDP microcontroller communicates with the ADE9078 placed on the evaluation board to process the requests sent from the PC.

INSTALLING THE DRIVERS

When using the ADE9078 evaluation tools for the first time, a driver must be installed to allow successful communication. Find the **SDPDriversNET.exe** driver in the evaluation software package in the **SDP Drivers** folder.

To install the driver, use the following procedure:

1. When the setup wizard appears, click **Next,** and follow the installation instructions.

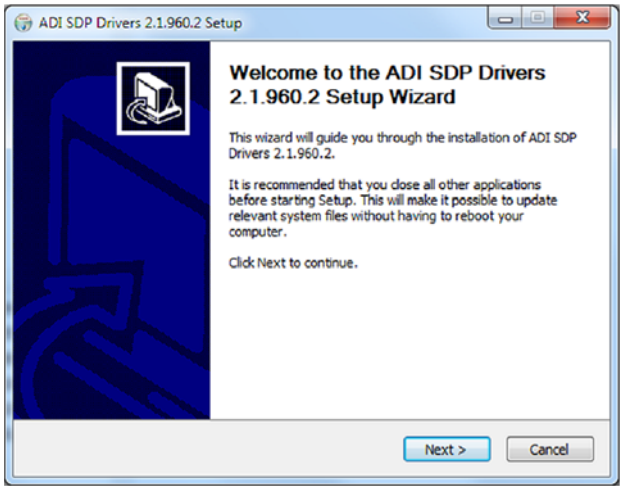

Figure 9. Setting Up the SDP Drivers

2. When installation is complete, click **Finish** to close the window.

Connect the USB cable from the PC to the SDP-B board. Windows detects the device and locates the correct driver automatically.

INSTALLING AND UNINSTALLING THE ADE9078 SOFTWARE

The ADE9078 evaluation software is supplied with the evaluation software package. It contains an installer to install the ADE9078 evaluation software. The program to be installed is a LabVIEW-based program that runs on the PC.

When running the software on a PC that does not have LabVIEW 2014 for the first time, run the installer. The installer installs a LabVIEW run-time engine that enables the PC to open the evaluation software executable without any issues. This installer is available in the **LabView\InstallationFiles** folder. If LabView 2014 is available on the PC, then the executable can be directly opened from the **Executable** folder.

To install and launch the ADE9078 evaluation software, use the following procedure:

1. Double-click **InstallationFiles\setup.exe**. This launches the setup program that automatically installs all the software components, including the uninstall program, and creates the required directories.
2. To launch the software, go to **Start/All Programs/ ADE9078** and click **ADE9078_Evaluation_Software**. When the software is run for the first time, right click on **ADE9078_Evaluation_Software** and select run as the administrator.

Both the ADE9078 evaluation software program and the run-time engine are uninstalled using the add/remove programs option in the control panel.

Before installing a new version of the ADE9078 evaluation software, use the following procedure:

1. Uninstall the previous version of the evaluation software.
2. Select the add/remove programs option in the Windows control panel.
3. Select the program to uninstall and click the **Add/ Remove** button.

FRONT PANEL

When the software executable is opened, the front panel window of the evaluation software appears, as shown in Figure 10. When opened for the first time, the software searches for two files: one file is the register file, **ADE9078_reg_map.bin,** and the other is the SDP microcontroller code file, **ADE9000.ldr**. These files can be found in the evaluation software package. After manually choosing the location of these files the first time, the **ADE9000coms.ini** file is updated with their file paths. This update allows the software to find the files correctly during the next run. See the Troubleshooting section if any issues arise.

The software recognizes the device on the evaluation board, (the ADE9078) and displays the device features in the **IC being evaluated:** indicator of the window. The SDP code version and the version register value of the IC are displayed in their corresponding indicators on the window. If the ADE9078 is present on the board, then the **Power Mode Selection** list box is displayed on the front panel window and the user can choose one of the power modes—PSM0, PSM1, PSM2, or PSM3—from the available options. The user can evaluate the IC in either PSM0 mode or PSM1 mode; the registers cannot be accessed in the PSM2 mode or the PSM3 mode of the ADE9078.

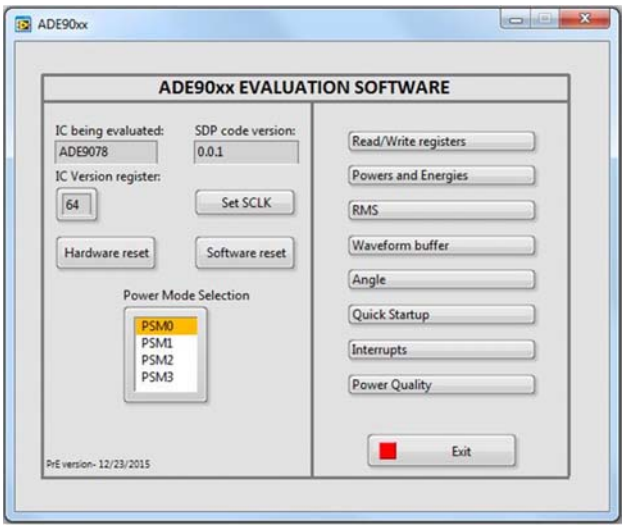

Figure 10. Front Panel Window of the Evaluation Software

There are three different operations that can be performed using the buttons present in the left pane of the front panel window (see Figure 10). These operations are enacted using the following buttons:

1. **Set SCLK.** Clicking this button opens a window, as shown in Figure 11. Set the SPI clock frequency for communication between the ADE9078 and the Blackfin microcontroller unit (SDP) using this window. The intended SCLK frequency value is entered on the SCLK control and the **Check if Valid** button is clicked. Clicking the **Check if Valid** button rounds off the clock frequency to the closest possible setting that is possible in the Blackfin microcontroller unit. Finally, the **Set SCLK** button is clicked to set the SCLK frequency in the Blackfin microcontroller unit and the window closes.

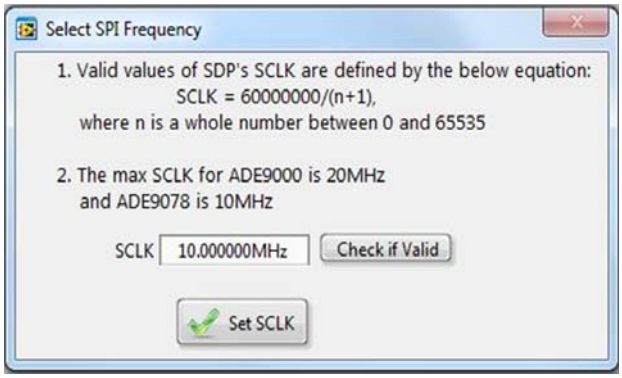

*Figure 11. Clicking the **Set SCLK** Button on the SDP*

2. **Software reset**. Clicking on this button performs a software reset on the ADE9078. A pop-up dialog box appears confirming the completion of the reset operation.
3. **Hardware reset.** Clicking on this button performs a hardware reset on the ADE9078. A pop-up dialog box appears confirming the completion of the reset operation.

EVALUATION SOFTWARE FUNCTIONS

The right pane of the front panel window (see Figure 10) consists of eight buttons, each of which can be used to evaluate a particular functionality of the ADE9078. The functionalities that can be evaluated are represented by the following buttons:

- **Read/Write registers**
- **Powers and Energies**
- **RMS**
- **Waveform buffer**
- **Angle**
- **Quick Startup**
- **Interrupts**
- **Power Quality**

Clicking on any of these eight buttons opens up a corresponding window. To close any of these windows, the same button must be clicked again on the front panel. Multiple windows can be left open on the monitor to evaluate different features at the same time. It is recommended that the **Quick Startup** window be executed first to ensure that all the initializations are performed correctly.

READ/WRITE REGISTERS BUTTON

The first button on the right pane of the front panel is the **Read/Write registers** button. Clicking on this button opens a window, as shown in Figure 12. There are four tabs available within this window, as follows:

- **Single access**
- **Sequential access**
- **All register access**
- **Read on Interrupt**

Each tab helps perform read/write operations to the ADE9078 at different capacities.

Single Access Tab

The **Single access** tab contains a **Name** selection box. Clicking on the down arrow on the selection box opens up a list of all the registers within ADE9078. Any of the registers can be selected for communication purposes. After the registers are selected, the **Address** box and **Length** box are updated on the screen. Alternatively, the address of the register can be written first, which updates the register name and the length fields. The individual bit fields within the register can be accessed via the **Bitfield** box. Data can be written to and read from the IC using the **Write** and **Read** buttons. The white boxes in the window denote the description of the register and the corresponding bit fields. Figure 12 shows the window when the **Single access** tab is selected.

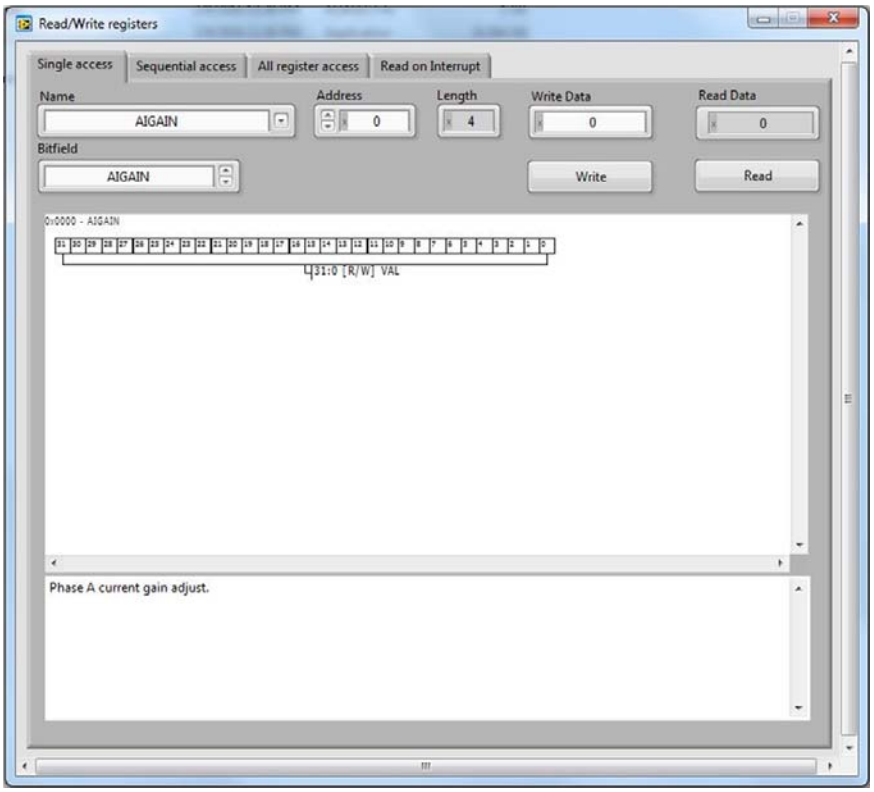

*Figure 12. **Read/Write registers** Window—**Single access** Tab*

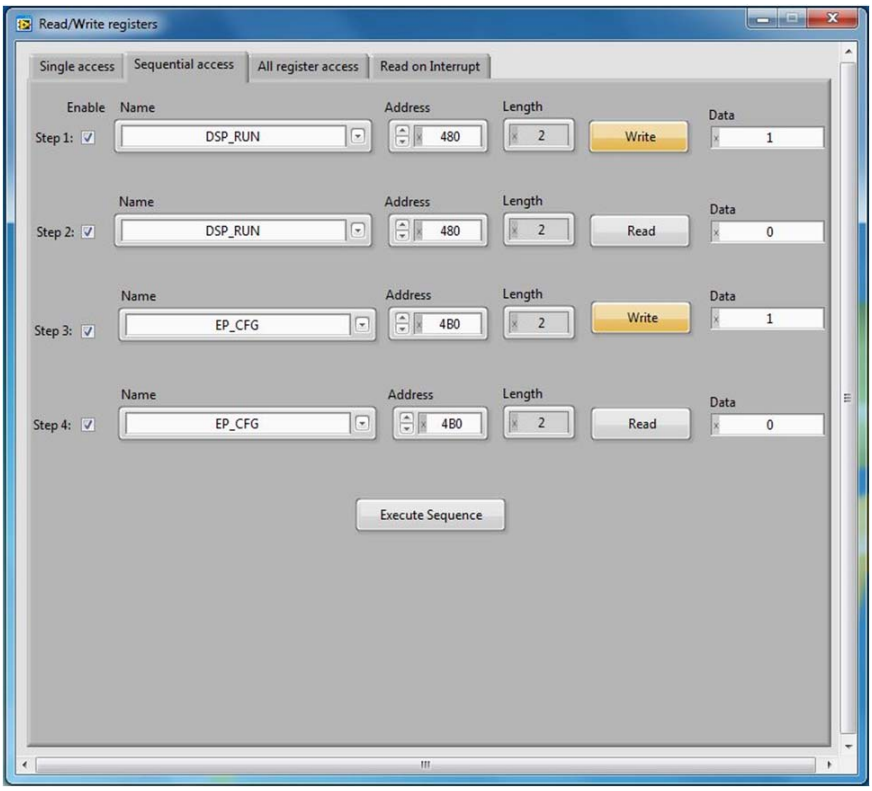

*Figure 13. **Read/Write registers** Window—**Sequential access** Tab*

Sequential Access Tab

The **Sequential access** tab allows the user to perform four different operations, either reads or writes, in a particular order. The **Enable** checkboxes at the beginning of each of the steps (Step 1 through Step 4) can be selected to enable that particular step. When all the required settings are entered, click the **Execute Sequence** button to perform the operations in sequence. Figure 13 shows the window when the **Sequential access** tab is selected.

All Register Access Tab

The **All register access** tab allows the user to read from all the registers on the device and to write all writable registers with a single button click. Clicking on the **Read and display all registers** button reads the registers and outputs the results to the **Register values** table. After entering the file path for saving the register values, click the **Save data to file** button to generate a text file with all the register values. Any notes for reference can be added to the file using the **Notes** box. The saved text file can also be edited and used to write back to the registers. When attempting to write back to the registers, edit the hexadecimal register value in the text file and specify the file path next to the **Read from file and update display** button (perform this action before clicking the button). Clicking this button updates the table in the window with the values from the file. At this point, clicking the **Write register values from display** button writes to all the writable registers within the ADE9078. Figure 14 shows the window with the **All register access** tab selected.

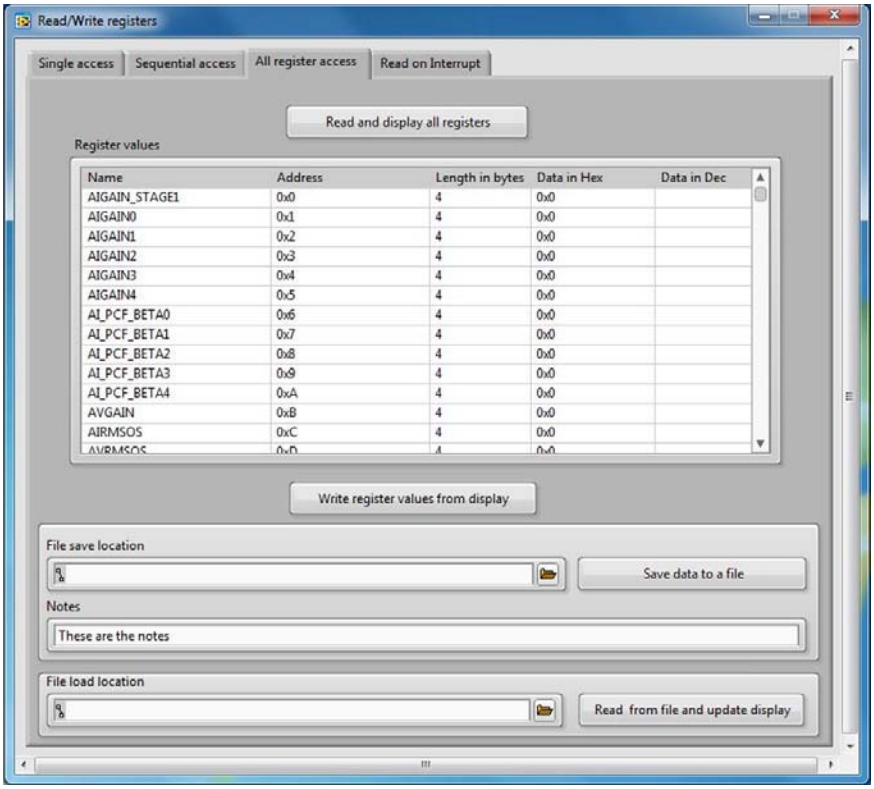

*Figure 14. **Read/Write registers** Window—All **register access** Tab*

Read on Interrupt Tab

The **Read on Interrupt** tab allows the user to read any particular register on any particular interrupt event. Examples of cases where using this tab may be useful are as follows:

- Reading the AVRMS register result on each DREADY interrupt.
- Reading the AWATTHR_HI register result every EGYRDY interrupt.

The register and the interrupt can be selected from their respective boxes on the window. The number of desired register reads is entered in the **No. of interrupts** box. Clicking the **Read on interrupts** button at this point performs the read operation and the results are available in the **Read-back values** table. The readback values can be saved to a file using the **Save data to a file** button provided in the window. Figure 15 shows the window when the **Read on Interrupt** tab is selected.

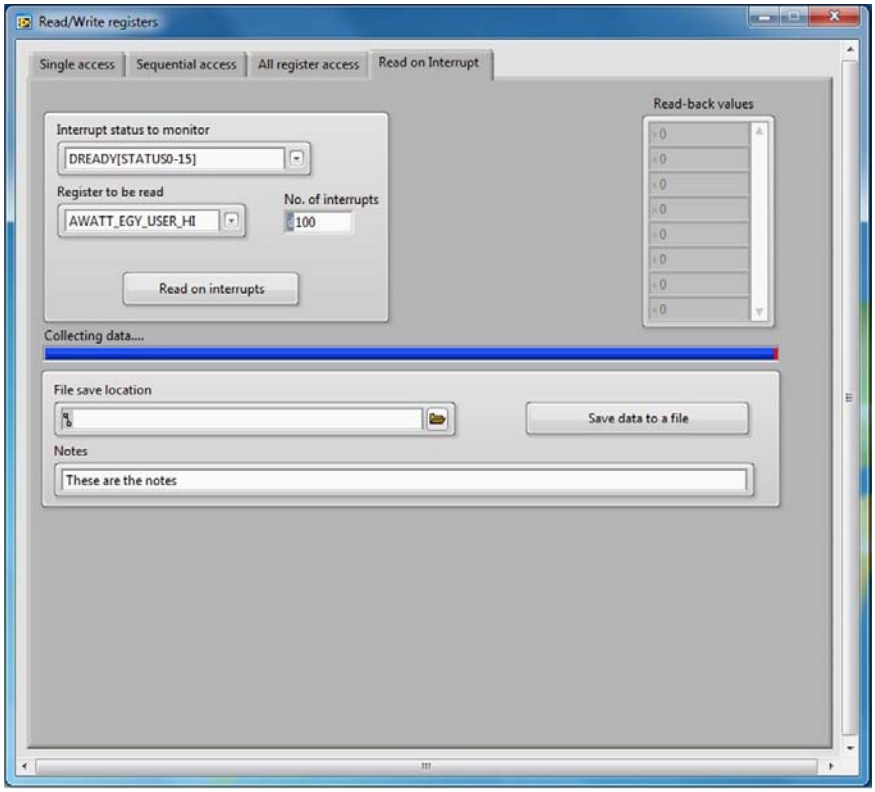

*Figure 15. **Read/Write registers** Window—**Read on Interrupt** Tab*

POWERS AND ENERGIES

The next functionality available in the evaluation software is powers and energies, located in the **Powers and Energies** window. This window has three tabs, as follows:

- **Powers**
- **Energies**
- **CF**

Powers Tab

The **Powers** tab allows the user to read from all the instantaneous powers and accumulated powers available in the ADE9078. When using the evaluation software with the ADE9078, certain register displays are grayed out, indicating that they are not available on the IC. Before evaluating the accumulated powers, it is recommended to set the **Power update rate (ms)** box and click the **Set** button next to it. This action writes to the PWR_TIME register accordingly. Figure 16 shows the window when the **Powers** tab is selected in the evaluation software. The signal path for the independent current and voltage channels is found in the RMS section.

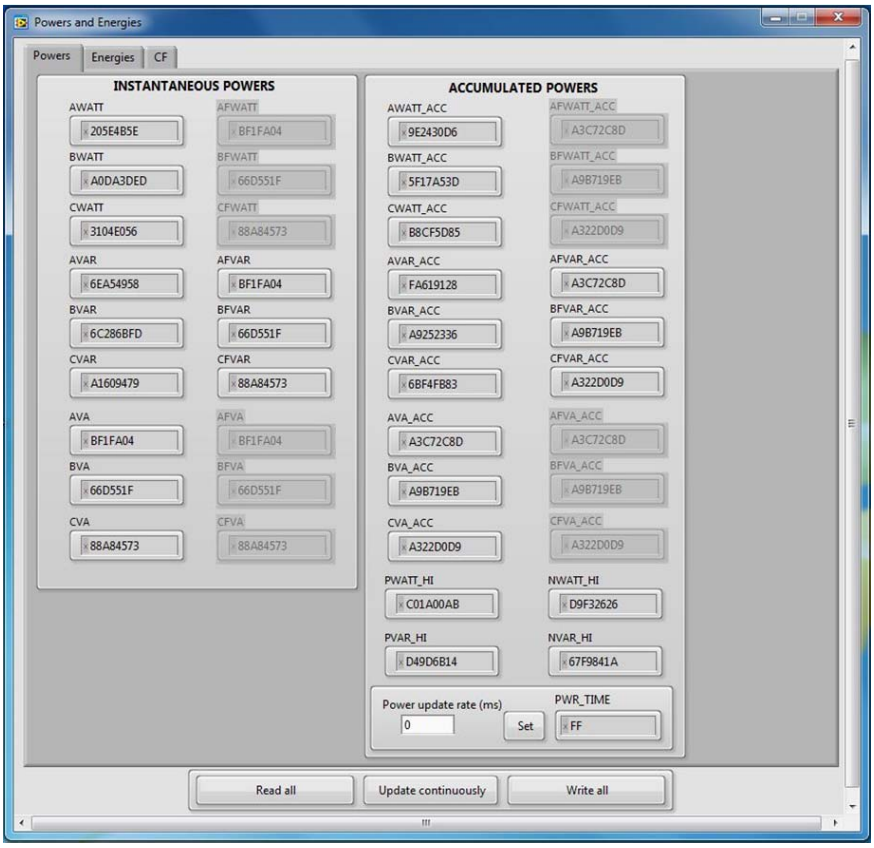

*Figure 16. **Powers** Tab*

Energies Tab

The **Energies** tab allows the user to set the EP_CFG register and the EGY_TIME register correctly and to read the energy results from the ADE9078. Figure 17 shows the **Energies** tab window. On the left half of the window, there are different options available for the user, such as selecting if accumulation must be turned on and, if so, must the accumulation be a samples-based accumulation or a line cycle-based accumulation. After all selections are made, click the **Set** button to write to the registers appropriately. The right half of the window displays the energy results.

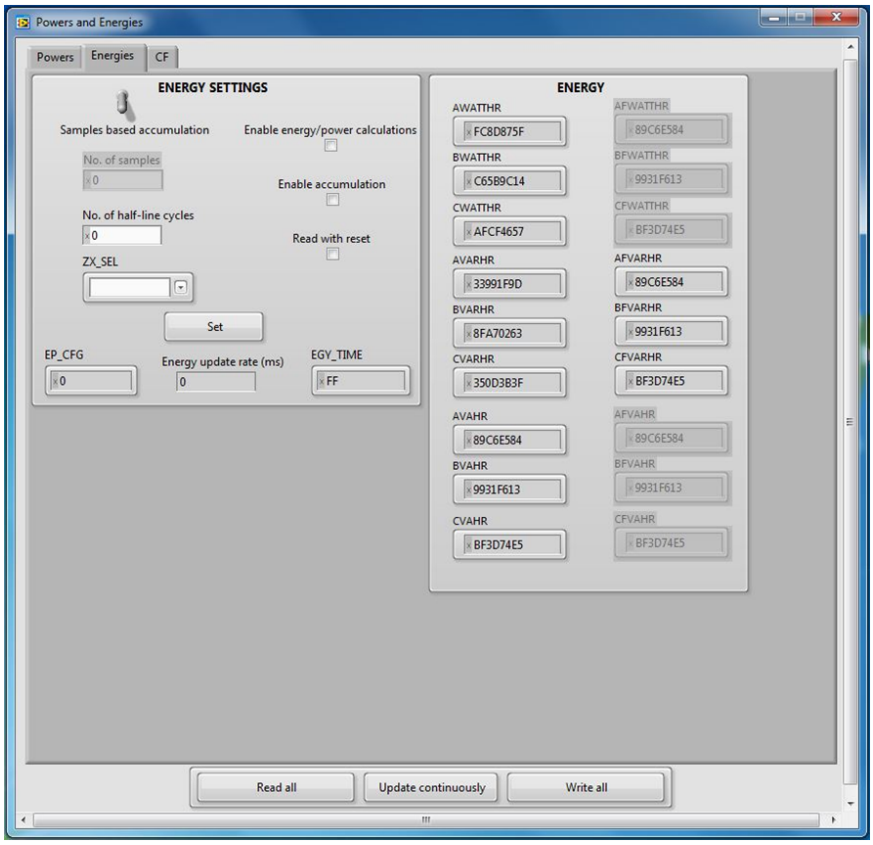

*Figure 17. **Energies** Tab*

CF Tab

The **CF** tab allows the user to configure the CFx pins of the ADE9078. There is a wide range of configurability available in the ADE9078 with respect to the functionality of the four CFx pins. Some of the major settings that affect the CFx pins results include the phases enabled in each CFx pin, the type of energy represented, and the CFxDEN register values. These settings can be set using the **CF** tab window, as shown in Figure 18. There are additional functionalities muxed onto the CF3 and CF4 pin, which can also be controlled using this window. Common threshold settings such as WTHR, VARTHR, and VATHR can also be set. The CFx low pulse width can be fixed at a particular value and the options available in the window, such as enabling the corresponding check boxes for each of the CFx pins and setting a value for the CF_LTMR bit field, are used to execute this pulse width setting.

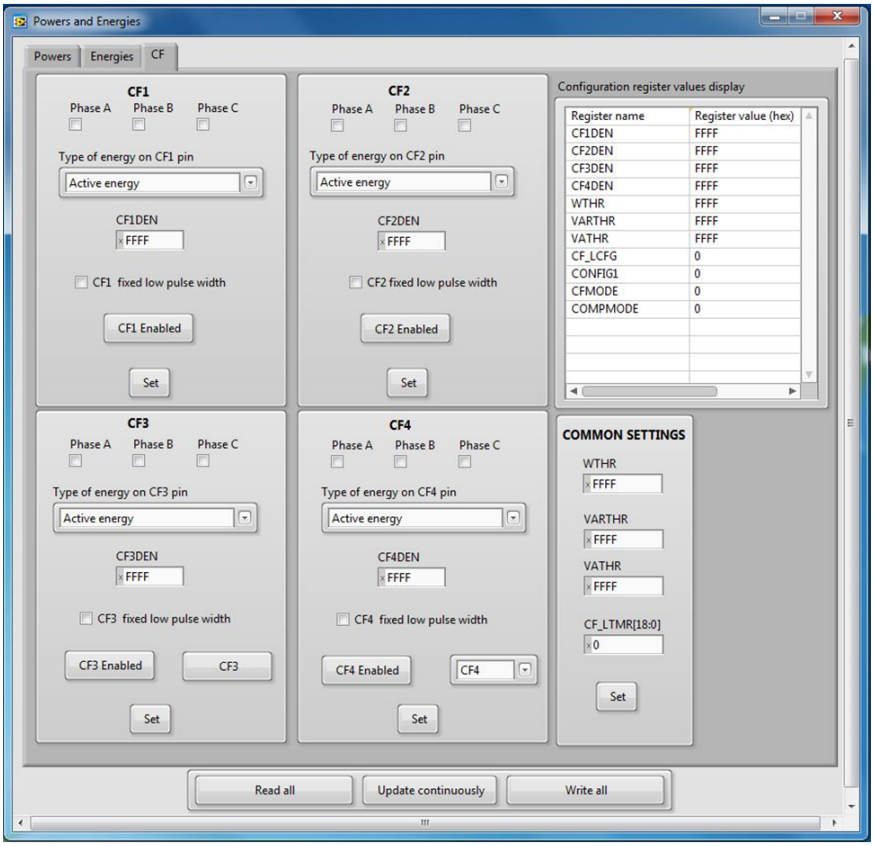

*Figure 18. **CF** Tab*

RMS WINDOW

The **RMS** window allows the user to visualize the datapath inside the ADE9078, as well as to configure the high-pass filter, the integrator, the programmable gain amplifier (PGA) gain levels, the ADC_REDIRECT register values, and the VCONSEL and ICONSEL settings, and to view the results. Perform the configuration changes by making the changes to the respective boxes in the window and clicking the **Write** button, located on the bottom right corner of the signal path. The different gain and offset registers can also be accessed via the tabs within this window.

There are several tabs within the **RMS** window. The first tab is the **Continuous monitor** tab, shown in Figure 19. The current and voltage RMS results are shown separately on the screen. When using the evaluation software with the ADE9078, some of the register indicators on screen are grayed out, indicating that they are unavailable on the ADE9078.

There are individual tabs present for each of the voltage and current channels. Under each of these tabs, there are multiple subtabs. The **IA** and **VA** tabs are shown in Figure 20 and Figure 21, respectively. VB and VC are very similar to the VA datapath; IB and IC are very similar to the IA datapath. The multipoint gain and phase calibration can be enabled and disabled using the **Disabled** button located at the bottom left half of each tab within the **RMS** window. The state of this button controls the multipoint gain and phase register accessibility. Figure 22 shows the **IN** tab. Under the **IN** tab, there are two subtabs: **Total RMS** and **ISUM**.

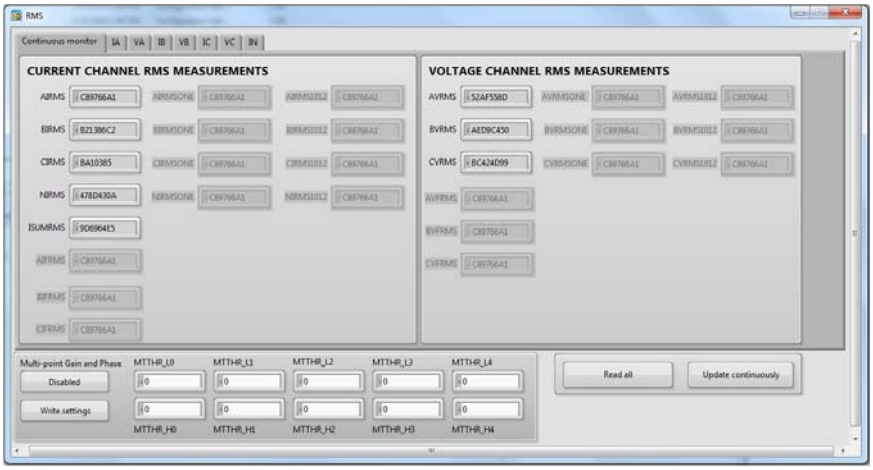

*Figure 19. **RMS** Window—**Continuous monitor** Tab*

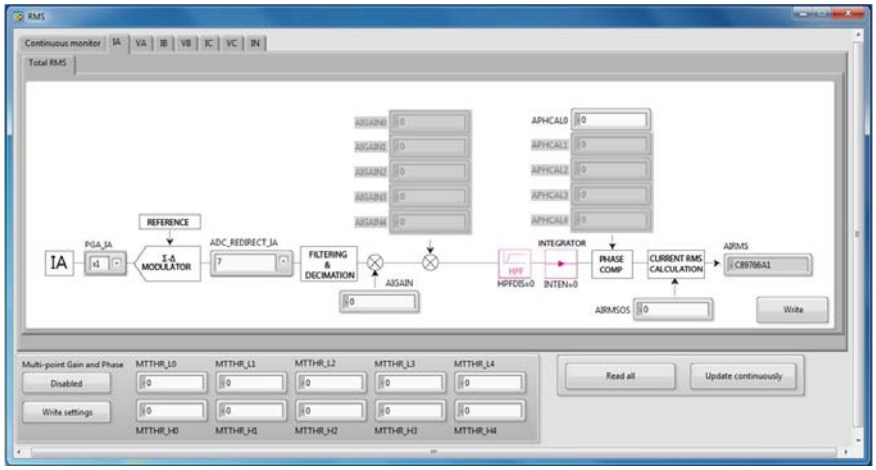

*Figure 20. **RMS** Window—**IA** Tab (**Total RMS** Subtab)*

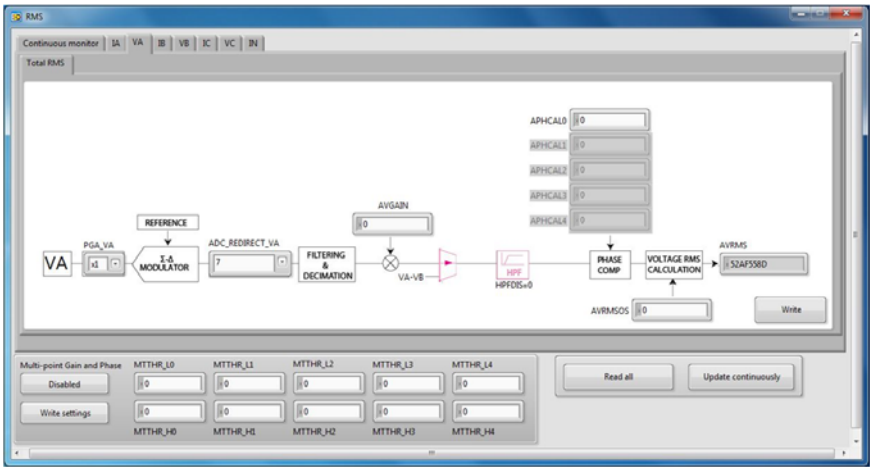

*Figure 21. **RMS** Window—**VA** Tab (**Total RMS** Subtab)*

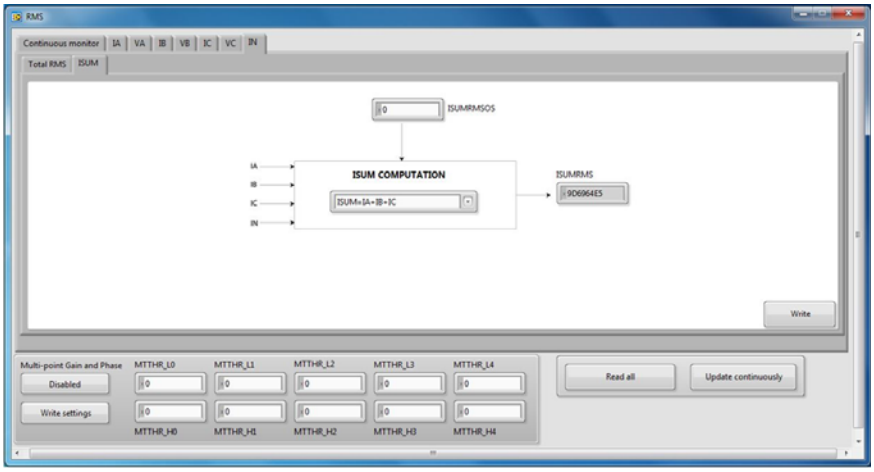

*Figure 22. **RMS** Window—**IN Tab** (**ISUM** Subtab)*

WAVEFORM BUFFER WINDOW

The **Waveform Buffer** window has two sections. The top half of the window controls the different settings of the waveform buffer. Different settings, such as the operation mode, specifying which channels burst, the source of the waveforms, and the number of samples to be collected are selected from this section of the window. After all the settings are designated, click the **Run** button to start the filling process of the buffer. After the filling is complete, the buffer samples are plotted in the time domain under the **Waveforms** tab. Figure 23 shows the **Waveform Buffer** window with the **Waveforms** tab selected.

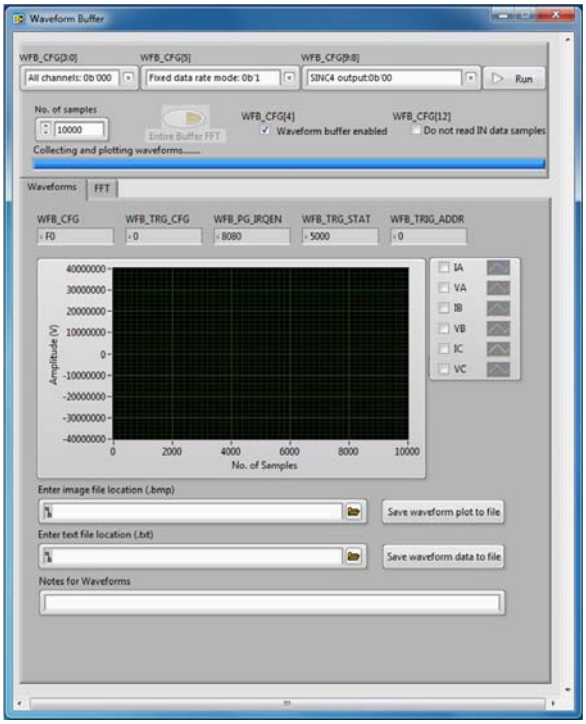

14345-023

*Figure 23. **Waveform Buffer** Window—**Waveforms** Tab*

If the **FFT** tab is selected, the window appears as shown in Figure 24. The FFT of all the waveforms is computed and plotted automatically based on the waveforms.

The window allows the user to save the waveform and FFT data into a text file. The waveform and FFT display images can be saved to a .bmp file as well.

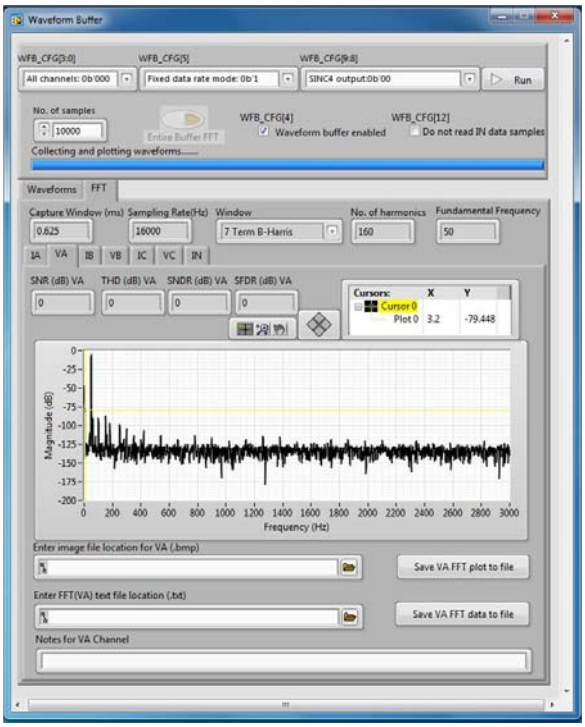

14345-024

*Figure 24. **Waveform Buffer** Window—**FFT** Tab*

ANGLE WINDOW

The **Angle** window is shown in Figure 25. This window allows the user to visualize the angles of three voltage and three current channels with respect to each other. On the left side of the window, all nine angle register values are displayed. Using these register results, the angles are computed in degrees and displayed in their respective boxes. The dial to the right of the screen gives a phasor like representation of the six signals. The frequency values are displayed below the dial. These values are computed from the xPERIOD register values. The **Angle** window does not require the user to perform a write. The user can save the values in the window to a file, perform a single read of the screen quantities, or perform a continuous update of the quantities using the respective buttons in the window.

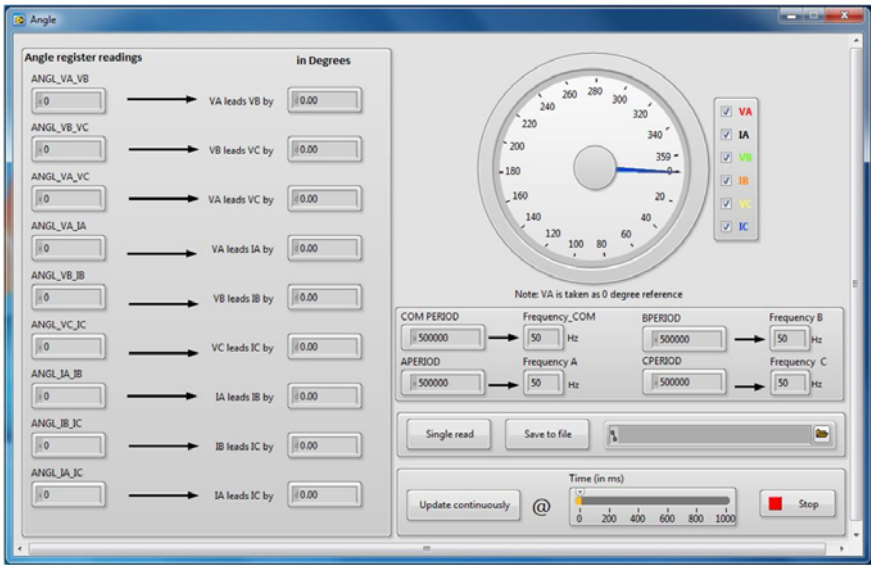

*Figure 25. **Angle** Window*

QUICK STARTUP WINDOW

The **Quick Startup** window is the first window that must be accessed by the user when using the evaluation software. There are three tabs within this window: the **Configuration** tab, the **Input circuitry** tab, and the **Startup procedure** tab. The **Startup procedure** tab is the main tab that performs the quick start-up routine, as well as all the necessary initializations. However, before the start-up routine and the initializations, make sure that the inputs are operating in the correct 3-phase configuration and that they are not overranging the analog-to-digital converters (ADCs).

The **Configuration** tab accepts the user response on a few parameters and selects the appropriate VCONSEL and ICONSEL settings for the user. The **Input circuitry** tab can be used as a quick calculator for determining if the input signal exceeds the current channel and the voltage channel ADCs inside ADE9078. By feeding in the system parameters and input signals, along with the PGA setting, the software calculates the signal level at the ADCs. If the signal level exceeds the full-scale range of the ADCs, the indicator turns red. This indication signals to the user that the system parameters must be adjusted.

The **Startup procedure** tab performs the following initialization steps, which must be completed sequentially:

1. Sets the PGA for all channels.
2. Sets SELFREQ and VLEVEL.
3. Enables the integrator and sets DICOEFF. This step is skipped for everything except the di/dt sensor.
4. Enables the DSP.
5. Disables the CFx pulse outputs, enables the energy and powers functionality, and reads all the energy registers on reset.
6. Performs a quick gain calibration and obtains calibration conversion constants, such as V/LSB, A/LSB, and Wh/LSB.
7. Obtains the CFxDEN values from the meter constant and writes these values to the registers.
8. Enables CF1 and CF2 and configures them such that CF1 denotes the sum of all the total active energy of the phases and CF2 denotes the sum of all the total reactive energy phases.

These steps must be performed sequentially. The user must click on the buttons in each step to perform the operation. The calibration constants can be saved to a file for future use.

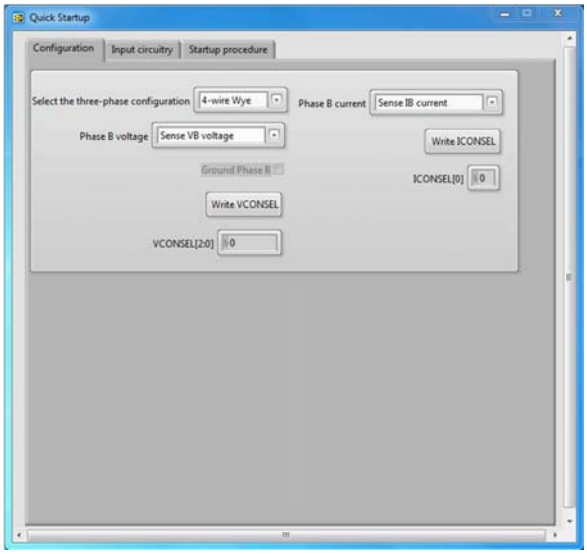

*Figure 26. **Quick Startup** Window*

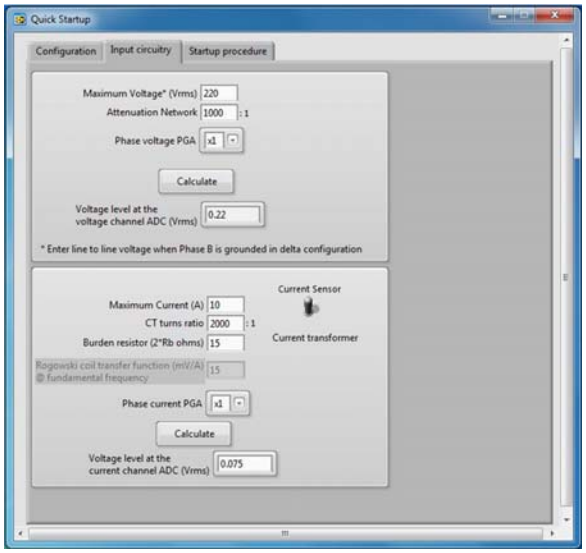

*Figure 27. **Quick Startup** Window—**Input circuitry** Tab*

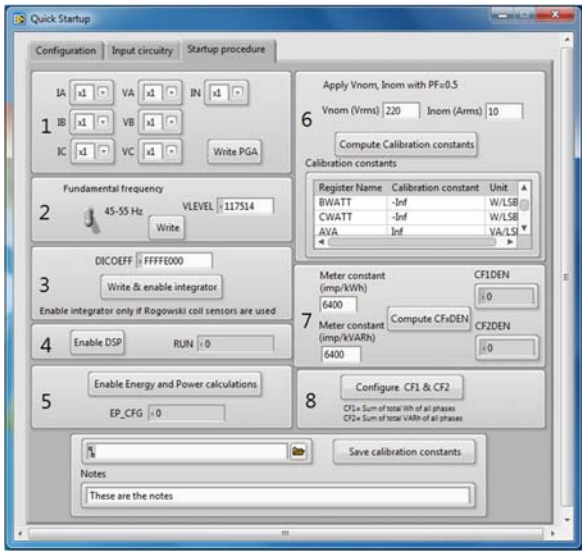

*Figure 28. **Quick Startup** Window—**Startup procedure** Tab*

INTERRUPTS WINDOW

The **Interrupts** window displays the status of all the interrupt events. The individual bits of the STATUS0 and STATUS1 registers are shown as green LEDs in the window (see Figure 29). If the LED is lit, it indicates that the corresponding status bit is set to 1. Next to each of the LEDs, there is a checkbox that represents the corresponding MASKx bits. If the MASKx bits must be set, enable the corresponding checkbox and click the **Write Mask Registers** button. Use the **Write '1' to all set status bits** button to reset all status bits simultaneously. If specific values must be written to the status bits, write to the bits using the controls on the left side of the screen.

View the $\overline{\text{IRQx}}$ pin logic level by clicking the **Check $\overline{\text{IRQx}}$ pin logic state** button. If the LED is lit, this means that the pin is in a logic low state. If the **Auto Clear** button is clicked, the interrupts available on the pins are reset on the fly. The $\overline{\text{IRQx}}$ pins can be monitored on a scope to understand the rate at which the interrupts are being set. The **Route all events to $\overline{\text{IRQ1}}$ pin** button sets the configuration bit that routes all interrupt events to be accessible via the $\overline{\text{IRQ1}}$ pin.

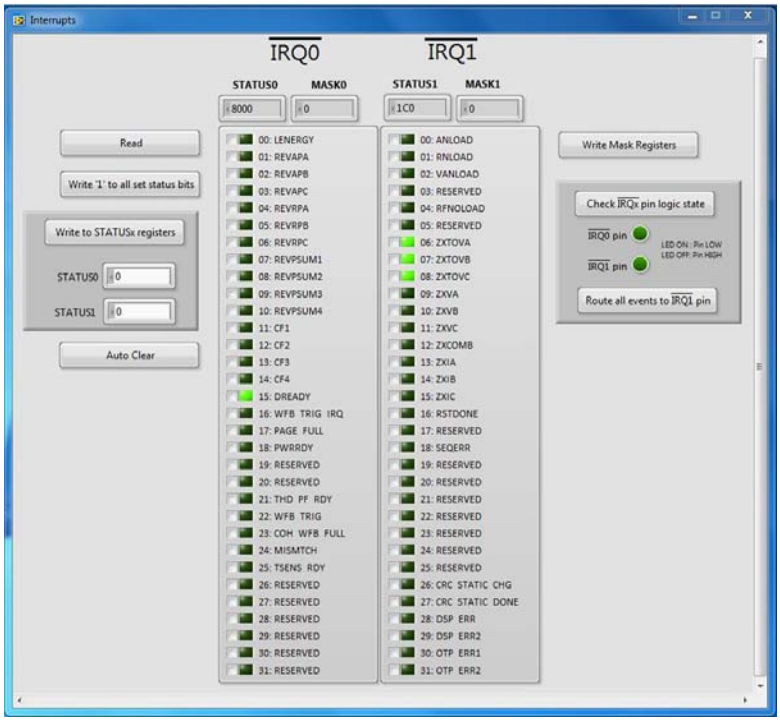

*Figure 29. **Interrupts** Window*

POWER QUALITY WINDOW

The **Power Quality** window allows the user to access all the power quality features of the ADE9078. The window is subdivided into three tabs, as follows:

- **Voltage monitor**
- **Current monitor**
- **Power Factor and THD**

Voltage Monitor Tab

The **Voltage monitor** tab is shown in Figure 30. This tab evaluates the DIP, SWELL, ZX, ZXTOUT, VPEAK, and phase sequence error detection features. When using the ADE9078, the DIP and the SWELL features are grayed out. This window allows the user to configure all the control inputs for the features and to monitor the status bits as LEDs. The corresponding mask bits can also be set using the checkboxes in the window.

Current Monitor Tab

The **Current monitor** tab is shown in Figure 31. This window is organized in the same way as the voltage monitor window. The IPEAK, ZX, and OI power quality features are accessible in this tab.

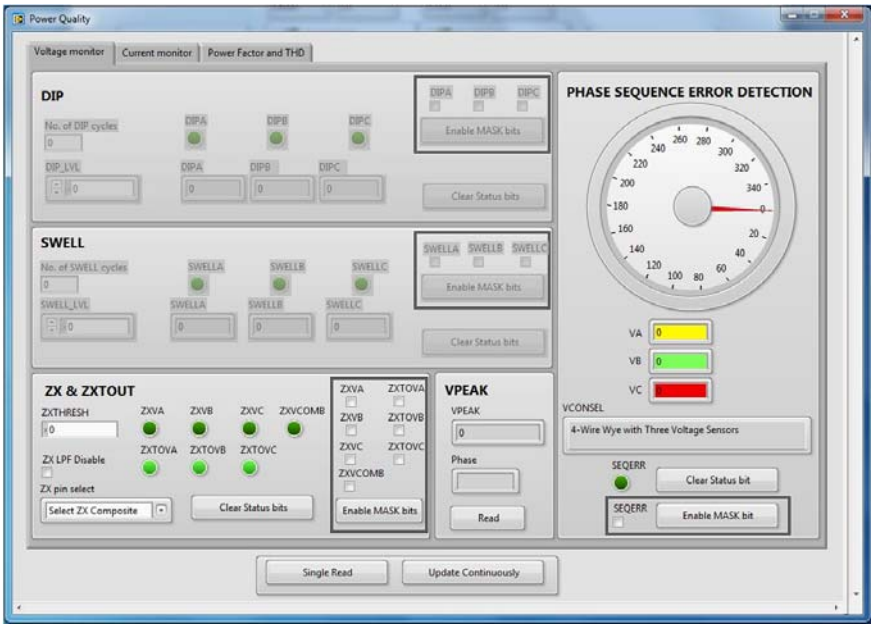

*Figure 30. **Power Quality** Window—**Voltage monitor** Tab*

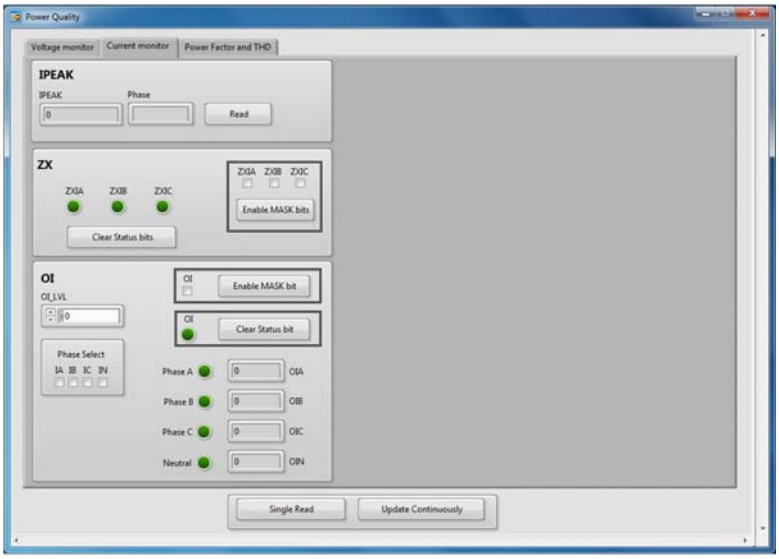

*Figure 31. **Power Quality** Window—**Current monitor** Tab*

Power Factor and THD Tab

The **Power Factor and THD** tab is shown in Figure 32. This window reads all the power factor and total harmonic distortion (THD) register results from the device, converts these results to meaningful results, and displays them. The THD calculations are not available in ADE9078; therefore, these calculations are grayed out when the evaluation software is used with the ADE9078.

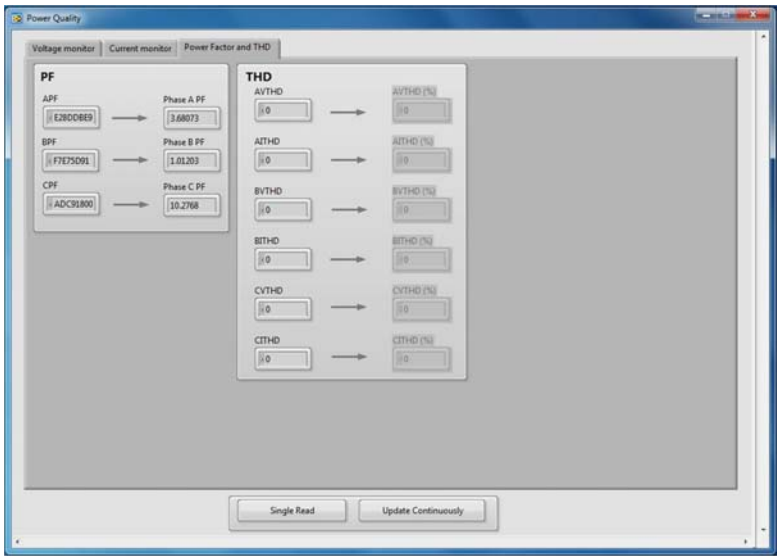

14345-032

*Figure 32. **Power Quality** Window—**Power Factor and THD** Tab*

TROUBLESHOOTING

If the software does not detect the SDP-B board, the message shown in Figure 33 is displayed.

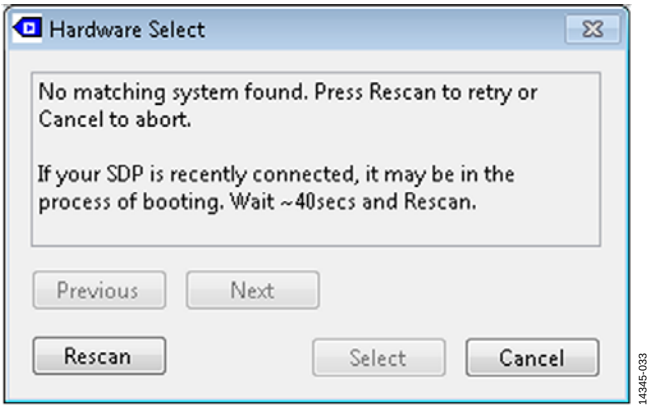

Figure 33. Hardware Select Message

If this message appears, take the following steps:

1. Verify that the SDP Blackfin board is connected to the PC using the USB cable. The window in Figure 34 pops up on the task bar; Windows then installs any other necessary drivers.
2. After the installation is complete, click **Rescan**.
3. When another window appears, check if the LED on the board is flashing; if so, click **Select**.

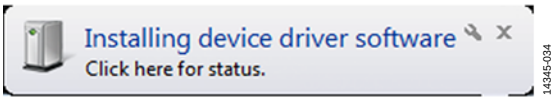

Figure 34. Installing Driver Software Message

EVALUATION BOARD SCHEMATICS AND ARTWORK

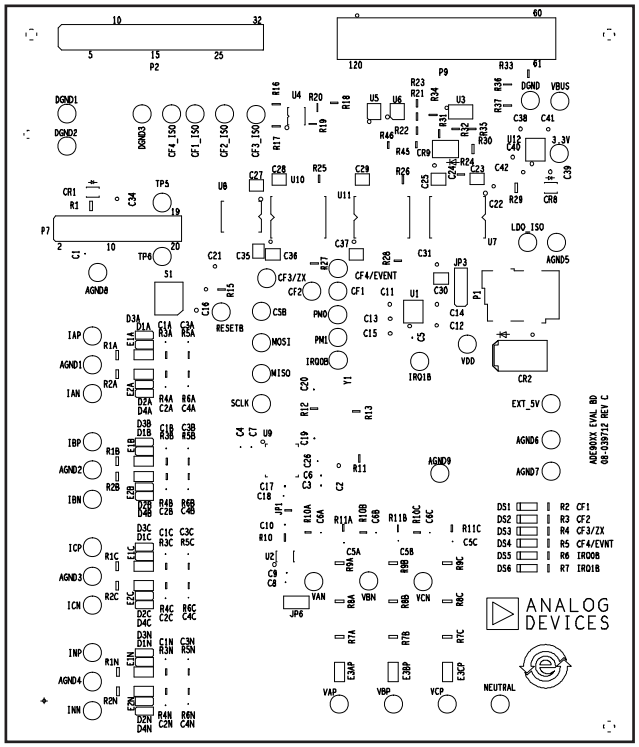

Figure 35. Evaluation Board Silkscreen

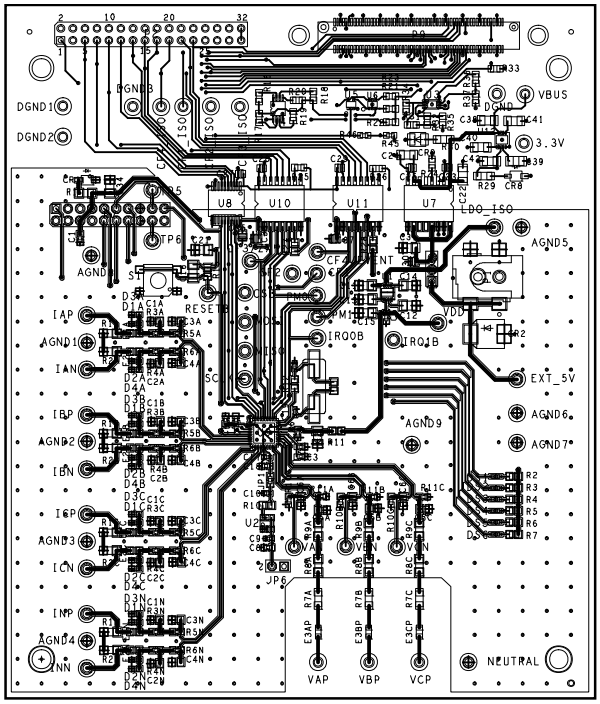

Figure 36. Evaluation Board Layout, Top Layer

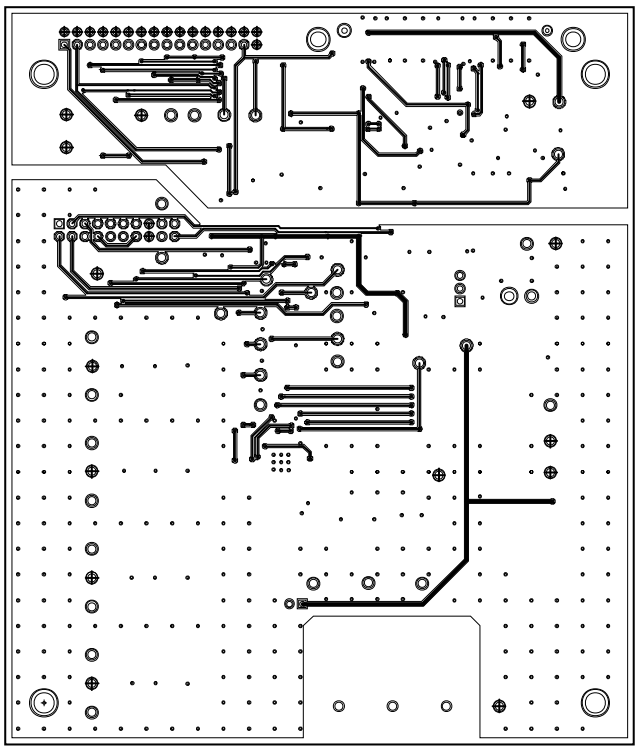

Figure 37. Evaluation Board Layout, Bottom Layer

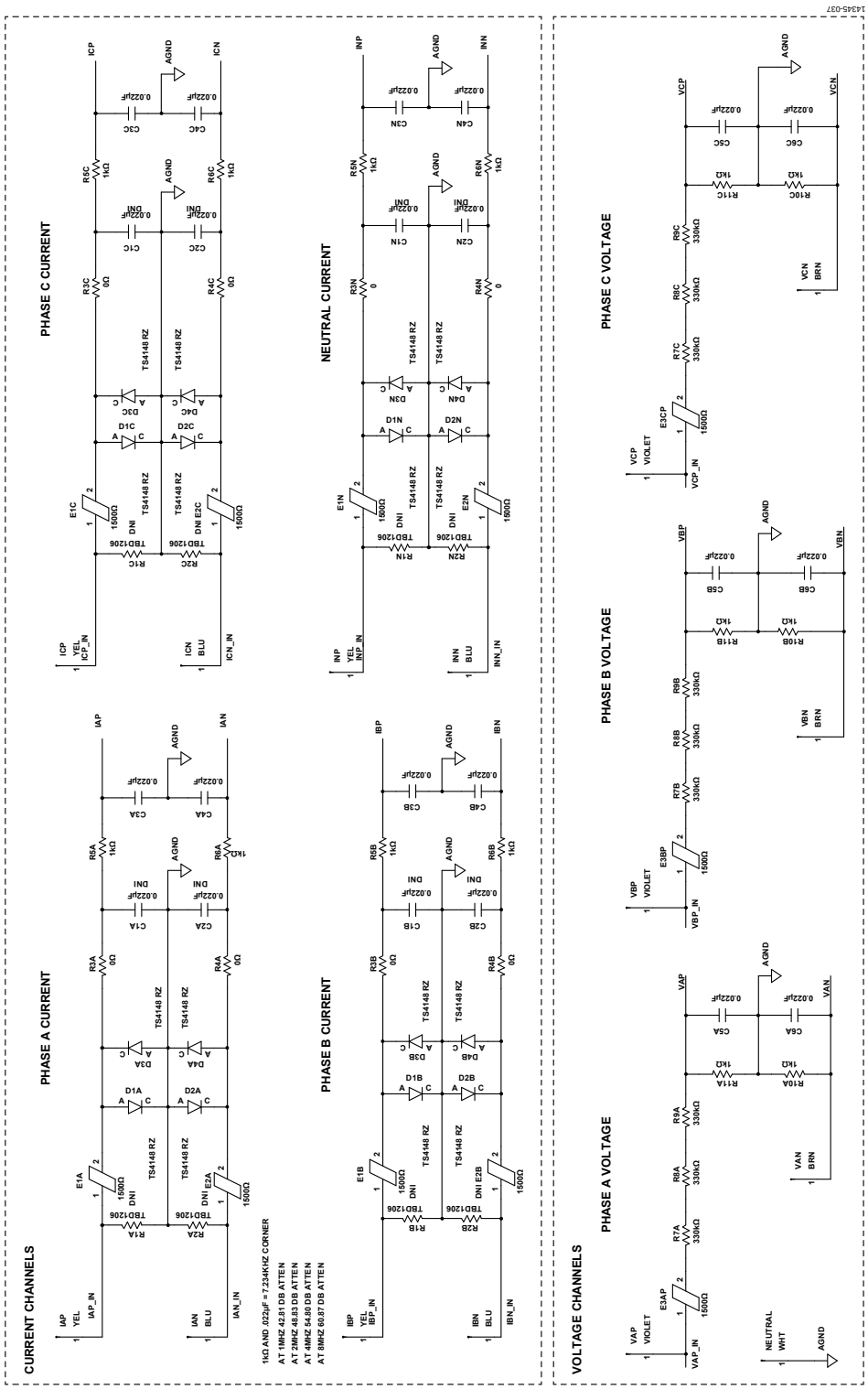

Figure 38. Evaluation Board Schematic, Part 1

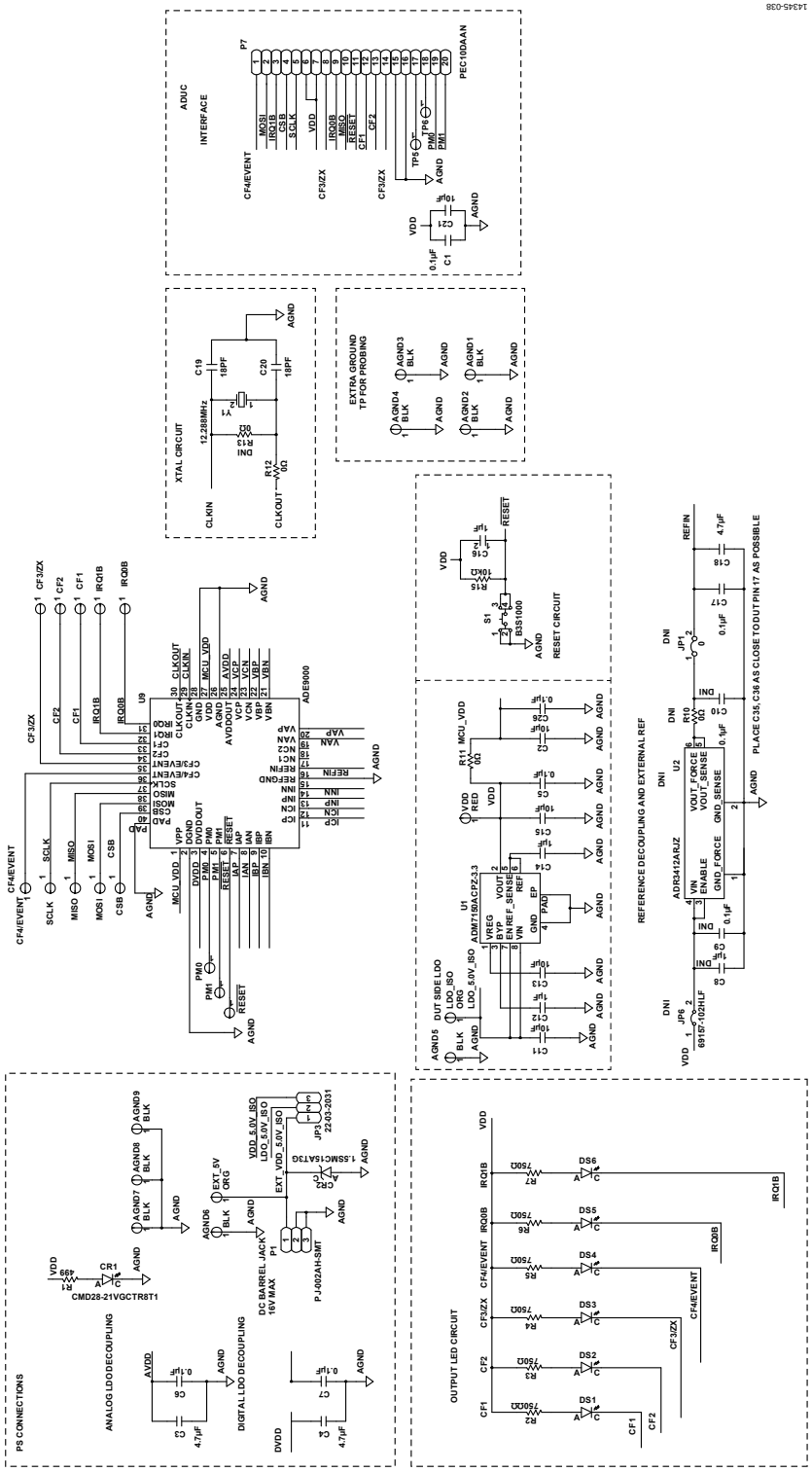

Figure 39. Evaluation Board Schematic, Part 2

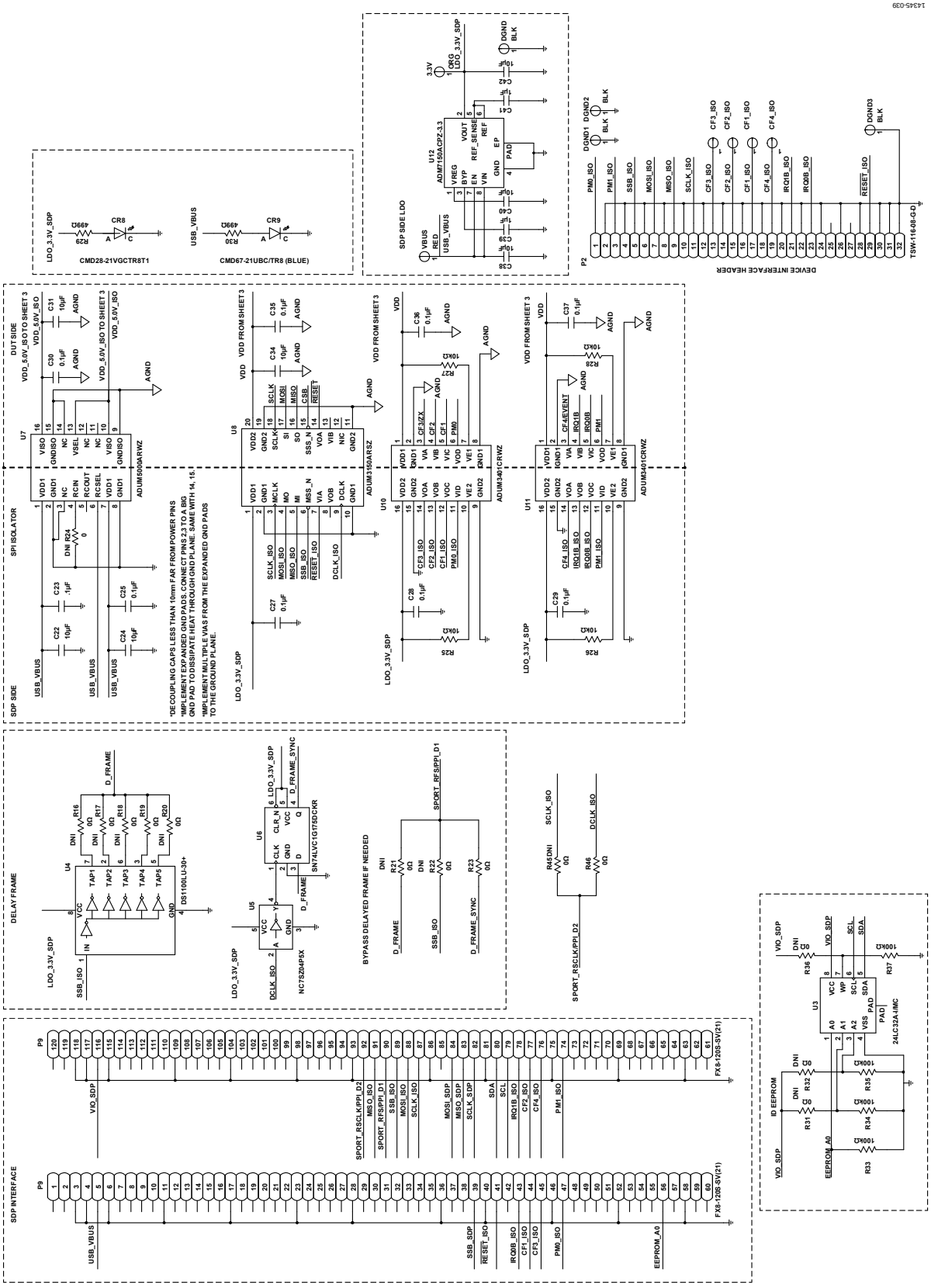

Figure 40. Evaluation Board Schematic, Part 3

ORDERING INFORMATION

BILL OF MATERIALS

Table 1.[1]

Reference Designator	Qty	Description	Value	Tolerance	Voltage (V)	Part Number
N/A	1	Printed circuit board (PCB)	N/A	N/A	N/A	08_039712c
3.3 V, EXT_5V, LDO_ISO	3	Connector; PCB test point, orange	Orange	N/A	N/A	TP104-01-03
DGND, AGND1 to AGND9, DGND1 to DGND3	13	Connector; PCB test point, black	Black	N/A	N/A	TP-104-01-00
C1, C5 to C7, C26	5	Capacitor, CER chip X8R	0.1 µF	10	25	C1608X8R1E104K
C2, C11, C13, C15, C21, C22, C24, C31, C34, C38, C40, C42	12	Capacitor, CER monolithic X7R	10 µF	10	25	GRM31CR71E106KA12L
C12, C14, C16, C39, C41	5	Capacitor, CER chip 1206 X7R	1 µF	10	35	GMK316B7105KL-T
C17	1	Capacitor, CER X7R 0402	0.1 µF	10	16	GRM155R71C-104KA88D
C3, C4, C18	3	Capacitor, monolithic CER X5R	4.7 µF	10	6.3	GRM188R60J-475KE19
C19, C20	2	Capacitor, chip monolithic CER C0G, 0402	18 pF	5	50	GJM1555C1H180-JB01
C23, C25, C27 to C30, C35 to C37	9	Capacitor, CER X7R	0.1 µF	10	10	0306ZC104KAT2A
C3A to C6A, C3B to C6B, C3C to C6C, C3N, C4N	14	Capacitor, CER multilayer C0G	0.022 µF	5	50	C2012C0G1H223J
CF1, CF2, $\overline{CS}$, PM0, PM1, TP5, TP6, MISO, MOSI, SCLK, $\overline{IRQ0}$, $\overline{IRQ1}$, CF3/ZX, $\overline{RESET}$, CF1_ISO to CF4_ISO, CF4/EVENT	19	Connector; PCB test point, gray	Gray	N/A	N/A	TP104-01-08
CR1, CR8	2	Diode, LED green SMD	CMD28-21VGCTR8T1	N/A	2.1	CMD28-21VGCTR8T1
CR2	1	Diode, Zener TVS	1.5SMC15AT3G	N/A	15	1.5SMC15AT3G
CR9	1	LED, blue, surface-mount	CMD67-21UBC/TR8 (blue)	N/A	4.5	CMD67-21UBC/TR8
D1A to D4A, D1B to D4B, D1C to D4C, D1N to D4N	16	Diode, high speed switching	TS4148 RZ	N/A	100	TS4148 RZ
DS1 to DS6	6	LED red, surface-mount	LNJ208R8ARA (red)	N/A	2.5	LNJ208R8ARA
E1A, E1B, E1C, E1N, E2A, E2B, E2C, E2N, E3AP, E3BP, E3CP	11	Inductor chip ferrite bead, 0805	1500 Ω	25	N/A	BLM21BD152SN1D
IAN, IBN, ICN, INN	4	Connector; PCB test point, blue	Blue	N/A	N/A	TP104-01-06
IAP, IBP, ICP, INP	4	Connector; PCB test point, yellow	Yellow	N/A	N/A	TP-104-01-04
JP3	1	Connector; PCB header, 2.54 mm, 3 position, vertical	22-03-2031	N/A	N/A	22-03-2031
NEUTRAL	1	Connector; PCB test point, white	White	N/A	N/A	TP-104-01-09
P1	1	Connector; PCB—use E022246 for 4-pin power jack from the CN4P_V6 folder	PJ-002AH-SMT	N/A	N/A	PJ-002AH-SMT
P7	1	Connector; PCB BERG header ST male, 20-pin	PEC10DAAN	N/A	N/A	PEC10DAAN
P9	1	Connector; PCB board to board receptacle ST, 0.6 mm pitch	FX8-120S-SV(21)	N/A	N/A	FX8-120S-SV(21)
R1, R29, R30	3	Resistor, precision thick film chip, R1206	499	1	N/A	ERJ-8ENF4990V
R10A, R10B, R10C, R11A, R11B, R11C	6	Resistor, film SMD, 0603	1 kΩ	0.1	N/A	ERA-3YEB102V
R11, R12, R19, R23	4	Resistor, thick film chip	0		N/A	ERJ-6GEY0R00V
R15, R25 to R28	5	Resistor, precision thick film chip, R0805	10 kΩ	1	N/A	ERJ-6ENF1002V
R2 to R7	6	Resistor, precision thick film chip, R0805	750	1	N/A	ERJ-6ENF7500V
R33 to R35, R37	4	Resistor, precision thick film chip, R0805	100 kΩ	1	N/A	ERJ-6ENF1003V
R3A, R3B, R3C, R3N, R46, R4A, R4B, R4C, R4N	9	Resistor, film SMD, 0603	0	5	N/A	ERJ-3GEY0R00V
R5A, R5B, R5C, R5N, R6A, R6B, R6C, R6N	8	Resistor, precision thick film chip, R0603	1 kΩ	1	N/A	ERJ-3EKF1001V

Reference Designator	Qty	Description	Value	Tolerance	Voltage (V)	Part Number
R7A to R9A, R7B to R9B, R7C to R9C	9	Resistor, high voltage thin film flat chip	33 kΩ	0.1	N/A	TNPV1206330KBEEN
S1	1	SW SM mechanical keyswitch	B3S1000	N/A	N/A	B3S1000
U1, U12	2	Analog Devices, Inc. IC, 800 mA, ultralow noise, high PSRR, RF linear regulator (3.3 V output)	N/A	N/A	N/A	ADM7150ACPZ-3.3
U10, U11	2	Analog Devices IC, quad-channel digital isolator	N/A	N/A	2.7 to 5.5	ADuM3401CRWZ
U3	1	IC, 32K bits, I²C serial EEPROM	24LC32A-I/MC	N/A	N/A	24LC32A-I/MC
U4	1	IC, 3.3 V to 5-tap economy timing element	DS1100LU-30+	N/A	N/A	DS1100LU-30+
U5	1	IC, tiny logic UHS inverter	NC7SZ04P5X	N/A	N/A	NC7SZ04P5X
U6	1	IC-TTL, single D-type flip-flop with asynchronous clear	SN74LVC1G175DCKR	N/A	N/A	SN74LVC1G175-DCKR
U7	1	Analog Devices IC, 2.5 kV, isolated dc-to-dc converter	N/A	N/A	N/A	ADuM5000ARWZ
U8	1	Analog Devices IC, V, 3.75 kV, 6-channel, SPIsolator digital isolator for SPI with delay clock	N/A	N/A	N/A	ADuM3150ARSZ
U9	1	Analog Devices IC, high performance, polyphase, energy metering AFE	N/A	N/A	N/A	ADE9078
VAN, VBN, VCN	3	Connector; PCB test point, brown	Brown	N/A	N/A	TP104-01-01
VAP, VBP, VCP	3	Connector; PCB test point, violet	Violet	N/A	N/A	TP104-01-07
VDD, VBUS	2	Connector; PCB test point, red	Red	N/A	N/A	TP-104-01-02
Y1	1	IC, crystal SMD, low profile	12.288 MHz	N/A	N/A	ABLS-12.288MHZ-L4Q-T

[1] N/A means not applicable.

I²C refers to a communications protocol originally developed by Philips Semiconductors (now NXP Semiconductors).

ESD Caution
ESD (electrostatic discharge) sensitive device. Charged devices and circuit boards can discharge without detection. Although this product features patented or proprietary protection circuitry, damage may occur on devices subjected to high energy ESD. Therefore, proper ESD precautions should be taken to avoid performance degradation or loss of functionality.

Legal Terms and Conditions
By using the evaluation board discussed herein (together with any tools, components documentation or support materials, the "Evaluation Board"), you are agreeing to be bound by the terms and conditions set forth below ("Agreement") unless you have purchased the Evaluation Board, in which case the Analog Devices Standard Terms and Conditions of Sale shall govern. Do not use the Evaluation Board until you have read and agreed to the Agreement. Your use of the Evaluation Board shall signify your acceptance of the Agreement. This Agreement is made by and between you ("Customer") and Analog Devices, Inc. ("ADI"), with its principal place of business at One Technology Way, Norwood, MA 02062, USA. Subject to the terms and conditions of the Agreement, ADI hereby grants to Customer a free, limited, personal, temporary, non-exclusive, non-sublicensable, non-transferable license to use the Evaluation Board FOR EVALUATION PURPOSES ONLY. Customer understands and agrees that the Evaluation Board is provided for the sole and exclusive purpose referenced above, and agrees not to use the Evaluation Board for any other purpose. Furthermore, the license granted is expressly made subject to the following additional limitations: Customer shall not (i) rent, lease, display, sell, transfer, assign, sublicense, or distribute the Evaluation Board; and (ii) permit any Third Party to access the Evaluation Board. As used herein, the term "Third Party" includes any entity other than ADI, Customer, their employees, affiliates and in-house consultants. The Evaluation Board is NOT sold to Customer; all rights not expressly granted herein, including ownership of the Evaluation Board, are reserved by ADI. CONFIDENTIALITY. This Agreement and the Evaluation Board shall all be considered the confidential and proprietary information of ADI. Customer may not disclose or transfer any portion of the Evaluation Board to any other party for any reason. Upon discontinuation of use of the Evaluation Board or termination of this Agreement, Customer agrees to promptly return the Evaluation Board to ADI. ADDITIONAL RESTRICTIONS. Customer may not disassemble, decompile or reverse engineer chips on the Evaluation Board. Customer shall inform ADI of any occurred damages or any modifications or alterations it makes to the Evaluation Board, including but not limited to soldering or any other activity that affects the material content of the Evaluation Board. Modifications to the Evaluation Board must comply with applicable law, including but not limited to the RoHS Directive. TERMINATION. ADI may terminate this Agreement at any time upon giving written notice to Customer. Customer agrees to return to ADI the Evaluation Board at that time. LIMITATION OF LIABILITY. THE EVALUATION BOARD PROVIDED HEREUNDER IS PROVIDED "AS IS" AND ADI MAKES NO WARRANTIES OR REPRESENTATIONS OF ANY KIND WITH RESPECT TO IT. ADI SPECIFICALLY DISCLAIMS ANY REPRESENTATIONS, ENDORSEMENTS, GUARANTEES, OR WARRANTIES, EXPRESS OR IMPLIED, RELATED TO THE EVALUATION BOARD INCLUDING, BUT NOT LIMITED TO, THE IMPLIED WARRANTY OF MERCHANTABILITY, TITLE, FITNESS FOR A PARTICULAR PURPOSE OR NONINFRINGEMENT OF INTELLECTUAL PROPERTY RIGHTS. IN NO EVENT WILL ADI AND ITS LICENSORS BE LIABLE FOR ANY INCIDENTAL, SPECIAL, INDIRECT, OR CONSEQUENTIAL DAMAGES RESULTING FROM CUSTOMER'S POSSESSION OR USE OF THE EVALUATION BOARD, INCLUDING BUT NOT LIMITED TO LOST PROFITS, DELAY COSTS, LABOR COSTS OR LOSS OF GOODWILL. ADI'S TOTAL LIABILITY FROM ANY AND ALL CAUSES SHALL BE LIMITED TO THE AMOUNT OF ONE HUNDRED US DOLLARS ($100.00). EXPORT. Customer agrees that it will not directly or indirectly export the Evaluation Board to another country, and that it will comply with all applicable United States federal laws and regulations relating to exports. GOVERNING LAW. This Agreement shall be governed by and construed in accordance with the substantive laws of the Commonwealth of Massachusetts (excluding conflict of law rules). Any legal action regarding this Agreement will be heard in the state or federal courts having jurisdiction in Suffolk County, Massachusetts, and Customer hereby submits to the personal jurisdiction and venue of such courts. The United Nations Convention on Contracts for the International Sale of Goods shall not apply to this Agreement and is expressly disclaimed.

©2016 Analog Devices, Inc. All rights reserved. Trademarks and registered trademarks are the property of their respective owners.
UG14345-0-9/16(0)