ANALOG DEVICES

Evaluation Board User Guide
UG-477

One Technology Way • P.O. Box 9106 • Norwood, MA 02062-9106, U.S.A. • Tel: 781.329.4700 • Fax: 781.461.3113 • www.analog.com

Evaluating the ADAU1772 Four ADC, Two DAC Low Power Codec with Audio Processor

EVAL-ADAU1772Z PACKAGE CONTENTS

EVAL-ADAU1772Z evaluation board
EVAL-ADUSB2EBZ (USBi) communications adapter
USB cable with Mini-B plug
Evaluation board/software quick start guide

DOCUMENTS NEEDED

ADAU1772 data sheet
AN-1006 Applications Note, *Using the EVAL-ADUSB2EBZ*

GENERAL DESCRIPTION

This user guide explains the design and setup of the EVAL-ADAU1772Z evaluation board.

This evaluation board provides full access to all analog and digital I/Os on the ADAU1772. The ADAU1772 core is controlled by Analog Devices, Inc., SigmaStudio™ software, which interfaces to the board via a USB connection. The EVAL-ADAU1772Z can be powered by a single AAA battery, by the USB bus, or by a single 3.8 V to 6 V supply; any of these are regulated to the voltages required on the board. The printed circuit board (PCB) is a 4-layer design, with a single ground plane and a single power plane on the inner layers. The board contains connectors for external microphones and speakers. The master clock can be provided externally or by the on-board 12.288 MHz passive crystal.

EVAL-ADAU1772Z EVALUATION BOARD TOP SIDE AND BOTTOM SIDE

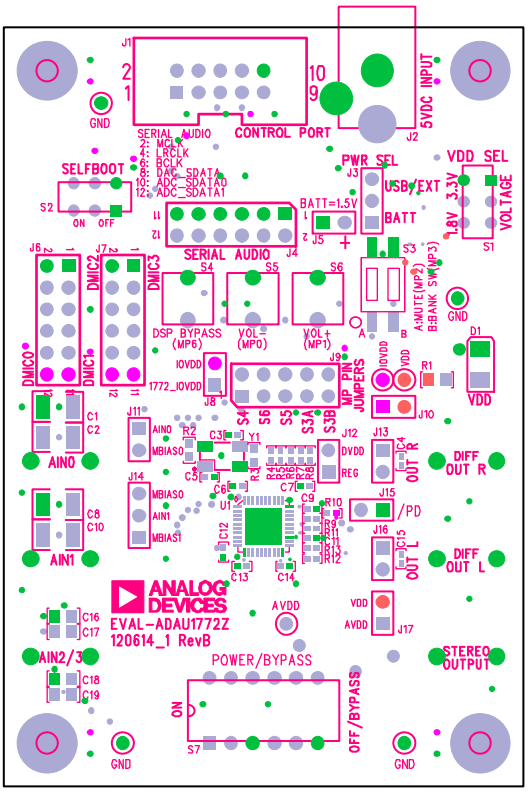

Figure 1. EVAL-ADAU1772Z Evaluation Board Top Side

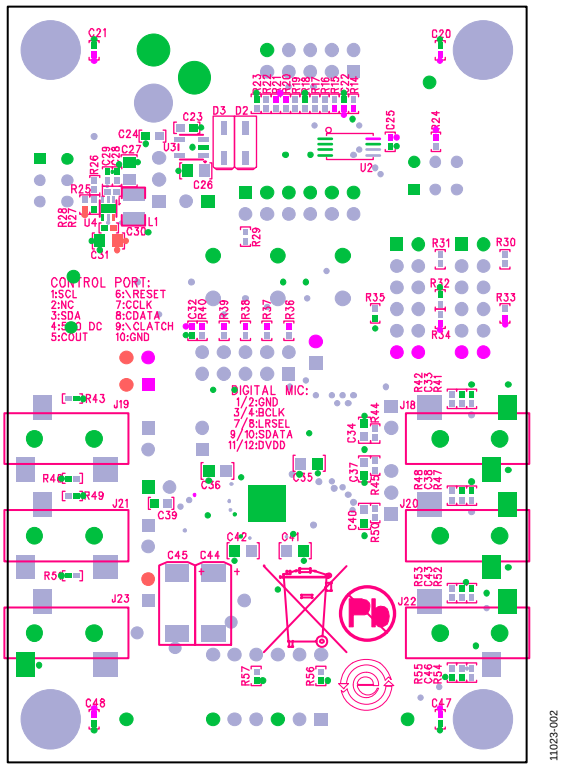

Figure 2. EVAL-ADAU1772Z Evaluation Board Bottom Side

TABLE OF CONTENTS

EVAL-ADAU1772Z Package Contents 1
Documents Needed 1
General Description 1
EVAL-ADAU1772Z Evaluation Board Top Side and Bottom Side 1
Revision History 2
Evaluation Board Block Diagrams 3
Setting Up the Evaluation Board 5
  Installing the SigmaStudio Software 5
  Installing the USBi Drivers 5
  Default Switch and Jumper Settings 6
  Powering Up the Board 6
  Connecting the Audio Cables 6
  Setting Up Communications in SigmaStudio 6
  Creating a Basic Signal Flow 7
  Downloading the Program to the DSP 9
Using the Evaluation Board 10
  Power 10
  Inputs and Outputs 10
  MP Pins 12
  Serial Audio Interface 13
  Communications Header (J1) 14
  Self-Boot 14
  Power-Down 14
Hardware Description 15
  Jumpers 15
  Integrated Circuits (IC) 15
  LED 15
Evaluation Board Schematics and Artwork 16
Ordering Information 25
  Bill of Materials 25

REVISION HISTORY

6/13—Rev. 0 to Rev. A

Added Figure 11; Renumbered Sequentially 6

11/12—Revision 0: Initial Version

EVALUATION BOARD BLOCK DIAGRAMS

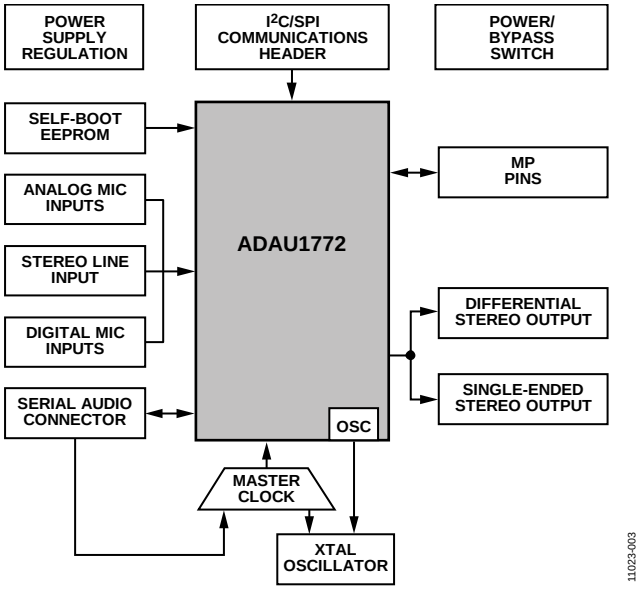

Figure 3. Functional Block Diagram

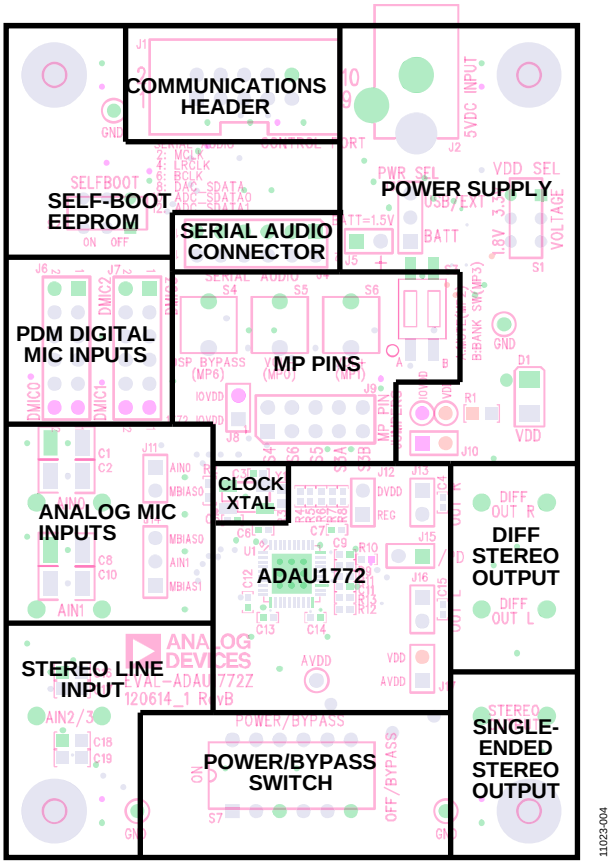

Figure 4. Board Layout Block Diagram

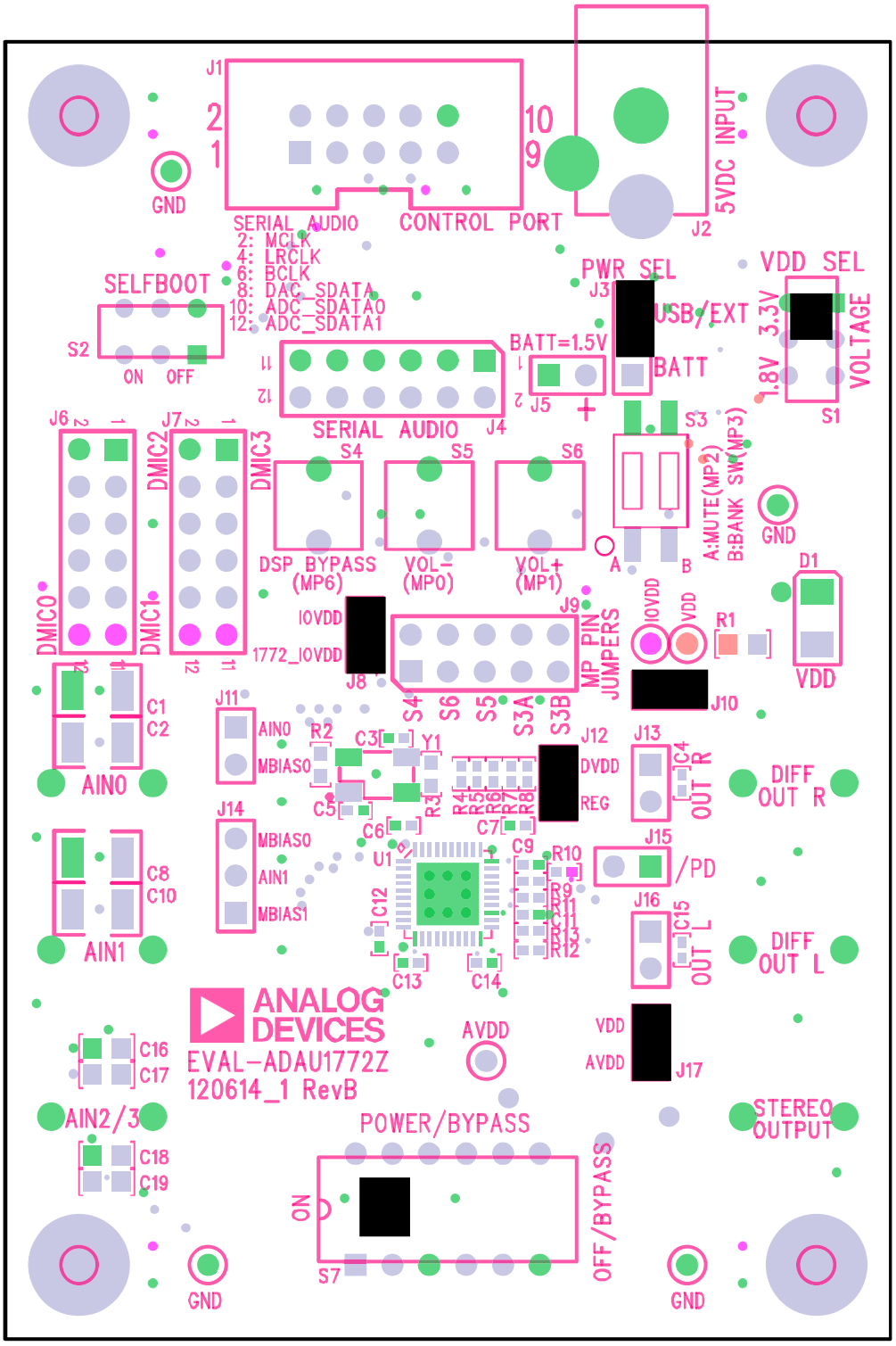

Figure 5. Default Jumper and Switch Settings (A Solid Black Rectangle Indicates a Switch or Jumper Position)

SETTING UP THE EVALUATION BOARD

INSTALLING THE SigmaStudio SOFTWARE

Users can download the latest version of SigmaStudio by completing the following steps:

1. Go to www.analog.com/sigmastudiodownload and fill in the **Email:** and **Software Key:** boxes. You will get a software key with the evaluation board, or you can contact Analog Devices at sigmadsp@analog.com to request a software key.
2. Chose which version of SigmaStudio you would like to use and click **SUBMIT**.
3. Download the installer file, open the file, and extract the files to your PC.
4. Install the Microsoft .NET Framework if you do not already have it installed.
5. Install SigmaStudio by double-clicking **Setup.exe** and following the prompts.

INSTALLING THE USBi DRIVERS

For Windows XP

SigmaStudio must be installed to use the USBi. When SigmaStudio has been properly installed, connect the USBi to an available USB port with the included USB cable. At this point, Windows® XP recognizes the device (see Figure 6) and prompts the user to install drivers.



Figure 6. Found New Hardware Notification

Select the **Install from a list or specific location (Advanced)** option and click **Next >** (see Figure 7).

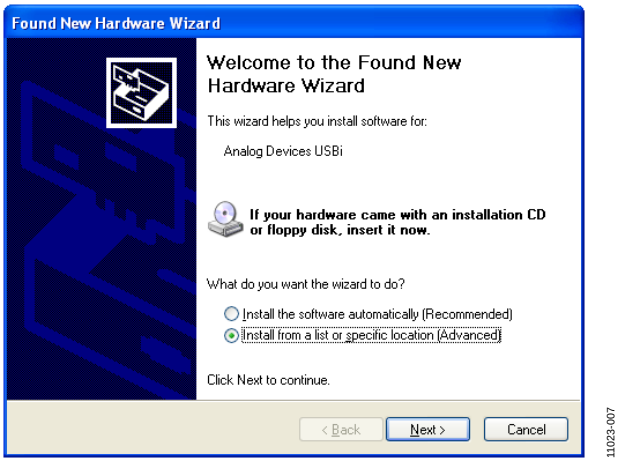

Figure 7. Found New Hardware Wizard—Installation

Click **Search for the best driver in these locations**, select **Include this location in the search**, and click **Browse** to find the SigmaStudio 3.7.x\USB drivers directory (see Figure 8).

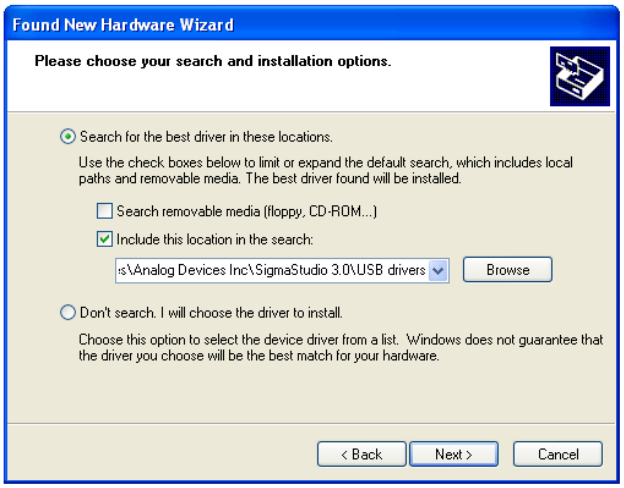

Figure 8. Windows Found New Hardware Wizard—Search and Installation Options

When the warning about Windows Logo testing appears, click **Continue Anyway** (see Figure 9).

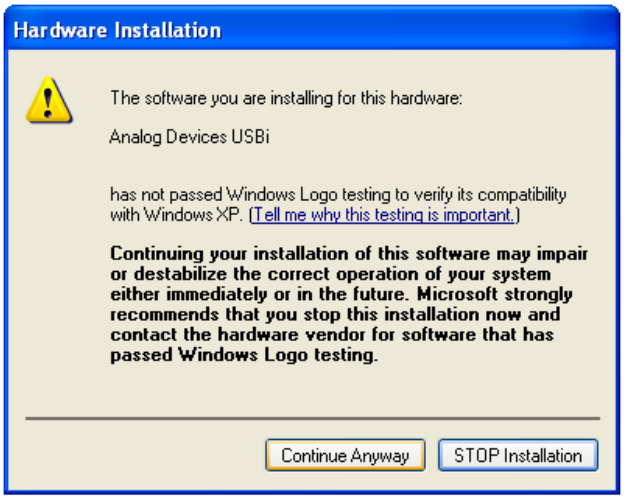

Figure 9. Windows Logo Testing Warning

The USBi drivers should now be installed successfully. Leave the USBi connected to the PC.

For Windows 7 and Vista

Connect the USBi to an available USB port with the included USB cable. At this point, Windows® 7 recognizes the device and installs the drivers (see Figure 10).

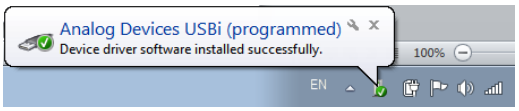

Figure 10. USBi Driver Installed Correctly

DEFAULT SWITCH AND JUMPER SETTINGS

The J8, J10, J12, and J17 jumpers must be connected, and the J3 jumper must be set to the USB/EXT power setting. The MP pin jumpers (J9) can be connected as desired to use the MP push-buttons or switches. The microphone bias jumpers, J11 and J14, can be inserted if microphone bias is needed on Input 0 and Input 1.

Switch S7 selects whether the board is to be powered up or if audio is to be bypassed from input to output with the board powered down. For normal operation, slide the switch to the left. S1 selects whether the ADAU1772 is powered from 3.3 V or 1.8 V; the default is 3.3 V. If powering the board via the USBi, ensure that the switch on the bottom of the USBi board is set to the correct voltage (1.8 V or 3.3 V). S2 controls self-boot operation. By default, S2 is slid to the right to disable self-boot operation.

POWERING UP THE BOARD

To power up the evaluation board, connect the ribbon cable of the USBi to J1 (CONTROL PORT) of the EVAL-ADAU1772Z.

CONNECTING THE AUDIO CABLES

Connect a stereo audio source to J22 (AIN2/3). Connect headphones or powered speakers to J23 (STEREO OUTPUT). The labels for J22 and J23 are only visible on the bottom of the board.

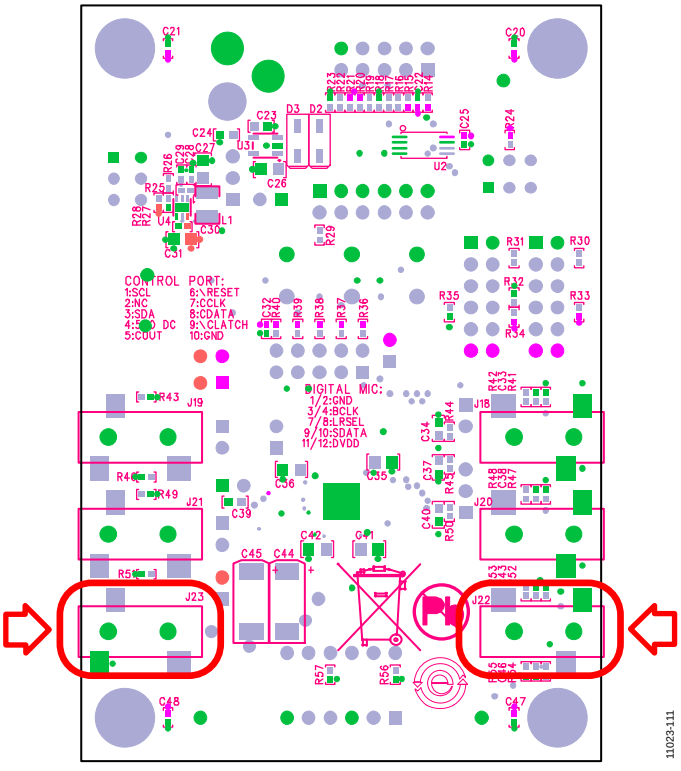

Figure 11. Stereo Out (J23), Left, and Stereo In (J22), Right

SETTING UP COMMUNICATIONS IN SigmaStudio

Start SigmaStudio by double-clicking the shortcut on the desktop.

Click **File…New Project** or press **Ctrl+N** to create a new project. The default view of the new project is called the **Hardware Configuration** tab.

To use the USBi in conjunction with SigmaStudio, select it in the **Communication Channels** subsection of the toolbox on the left side of the **Hardware Configuration** tab, and add it to the project space by clicking and dragging it to the right (see Figure 12).

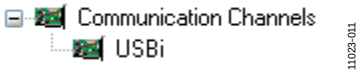

Figure 12. Adding the USBi Communication Channel

If SigmaStudio cannot detect the USBi on the USB port of the PC, the background of the **USB** label will be red (see Figure 13). This can happen when the USBi is not connected or when the drivers are incorrectly installed.

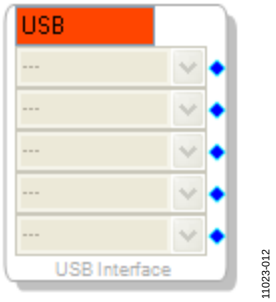

Figure 13. USBi Not Detected by SigmaStudio

If SigmaStudio detects the USBi on the USB port of the PC, the background of the **USB** label changes to orange (see Figure 14).

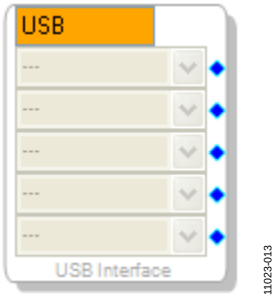

Figure 14. USBi Detected by SigmaStudio

To add an ADAU1772 to the project, select it from the **Processors (ICs / DSPs)** list and drag it to the project space (see Figure 15).

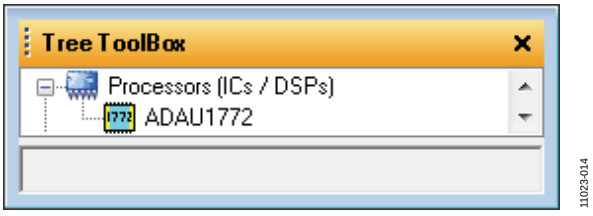

Figure 15. Adding an ADAU1772

To use the USB interface to communicate with the target integrated circuit (IC), connect it by clicking and dragging a wire between the blue pin of the USBi and the green pin of the IC (see Figure 16). The corresponding drop-down box of the USBi automatically fills with the default mode and channel for that IC.

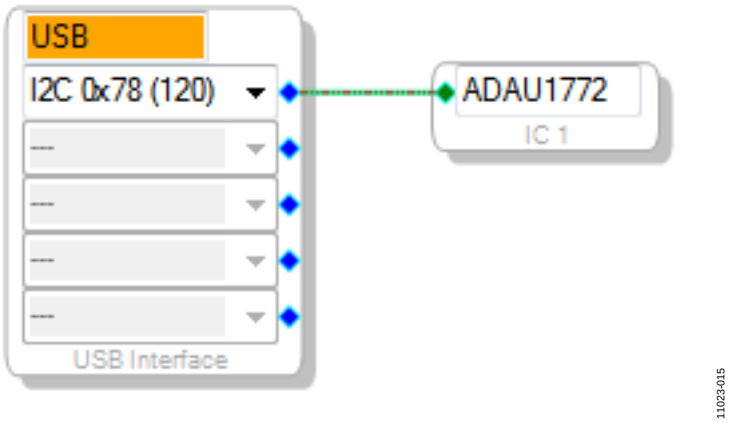

Figure 16. Connecting the USB Interface to an ADAU1772 IC

CREATING A BASIC SIGNAL FLOW

To access the **Schematic** tab, where a signal processing flow can be created, click the **Schematic** tab at the top of the screen (see Figure 17).

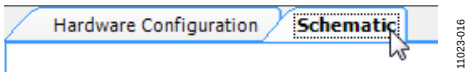

Figure 17. Schematic Tab

The left side of the schematic view includes the **Toolbox**, which contains all of the algorithms that can run in the SigmaDSP. Select the **Input** cell from within the **IO** > **Audio Input** folder (see Figure 18).

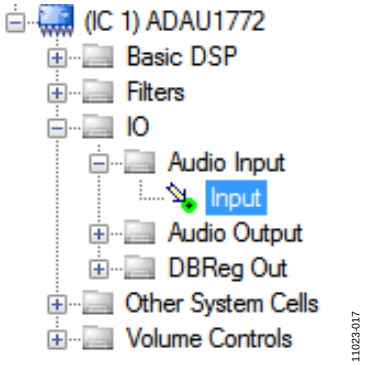

Figure 18. Input Cell Selection

Click and drag the **Input** cell into the blank schematic space to the right of the **Toolbox** (see Figure 19).

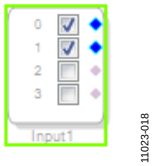

Figure 19. Input Cell

Because Input 2 and Input 3 are being used as a stereo pair, deselect the **0** and **1** and select the **2** and **3** (see Figure 20).

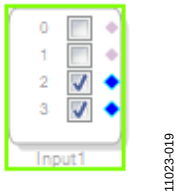

Figure 20. Input 2 and Input 3 Selected

Navigate to the **IO** > **Audio Output** folder and select the **Output** cell (see Figure 21).

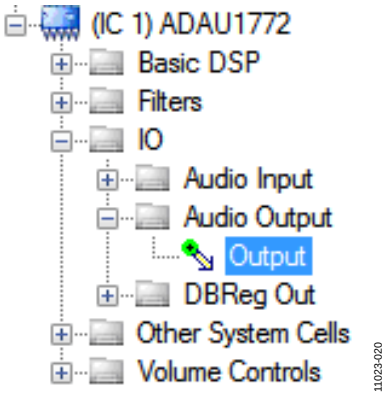

Figure 21. Output Cell Selection

Click and drag an output cell to the schematic. Do this again to create two outputs (see Figure 22). Make sure the output cells are assigned to **OUT0** and **OUT1**, respectively.

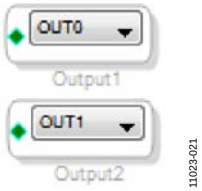

Figure 22. Output Cells

Connect the cells together by left-clicking a blue output dot and dragging to the green output dot of the next cell, connecting the Input **2** to **OUT0** and Input **3** to **OUT1** (see Figure 23).

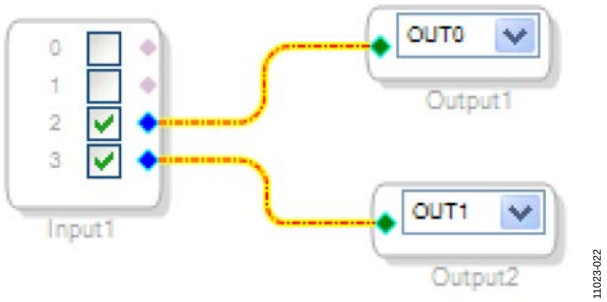

Figure 23. Connected Signal Flow

The basic signal flow is now complete with the stereo I/O.

Add Volume Control

To add volume control via the VOL− and VOL+ buttons, add jumpers to S5 and S6 on J9 (see Figure 24).

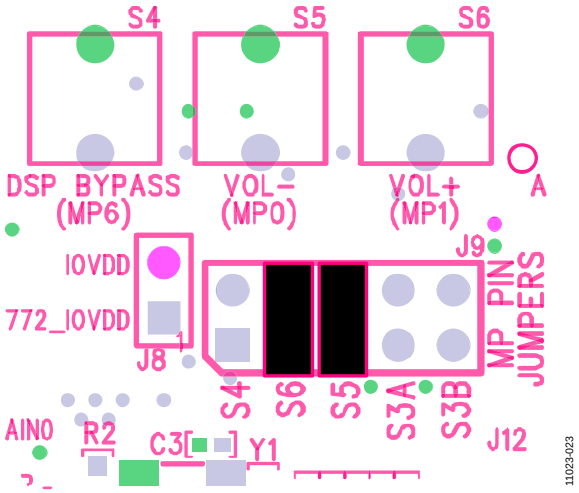

Figure 24. Jumpers for Volume Pushbuttons

Navigate to the **Hardware Configuration** tab. In the bottom left corner, the **IC 1 – ADAU1772 Register Control** tab is seen (see Figure 25).

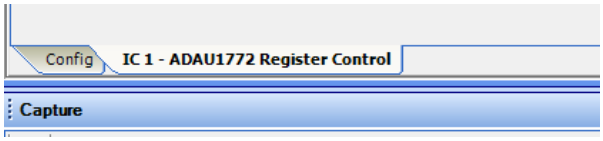

Figure 25. ADAU1772 Register Control Tab

Click it and find the **Output/Serial Port** tab in the top right corner. In the bottom left corner of the **Output/Serial Port** tab, the **Push Button Vol** section is located. Locate the drop-down menu for **Converters Controlled by PushButton Volume:** and change its value to **All ADCs** (see Figure 26).

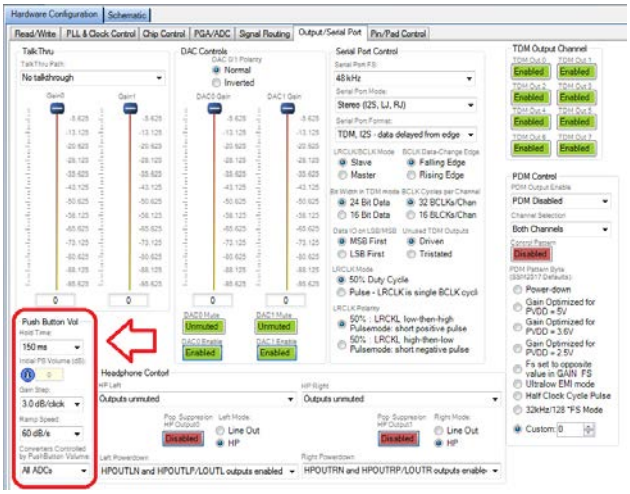

Figure 26. (Output/Serial Port Tab)

Navigate to the **Pin/Pad Control** tab. In the **Pin Modes** section, change the value of **DAC_SDATA/MP0** to **Push-button volume down** and the value of **ADC_SDATA0/PDMOUT/MP1** to **Push-button volume up** (see Figure 27).

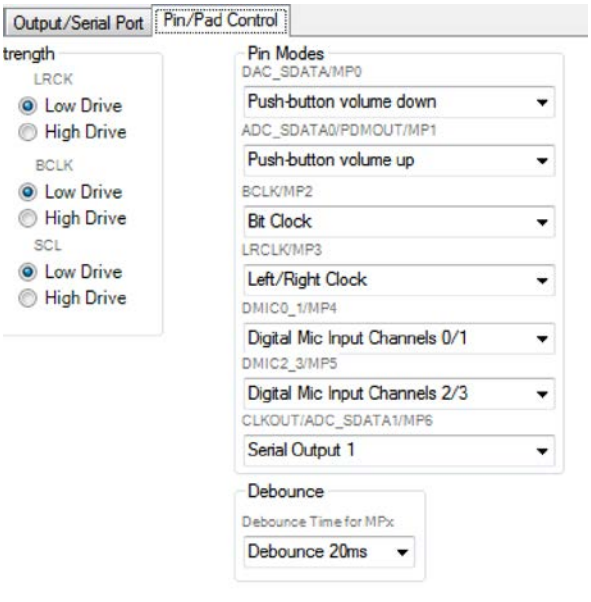

Figure 27. Pin/Pad Control tab

The schematic is ready to be compiled and downloaded to the evaluation board.

DOWNLOADING THE PROGRAM TO THE DSP

To compile and download the code to the DSP, click the **Link-Compile-Download** button once in the main toolbar of SigmaStudio (see Figure 28). Alternately, press the **F7** key.



Figure 28. Link-Compile-Download Button

If the project does not compile correctly, an error displays (see Figure 29). If this occurs, go back and check your work for mistakes.

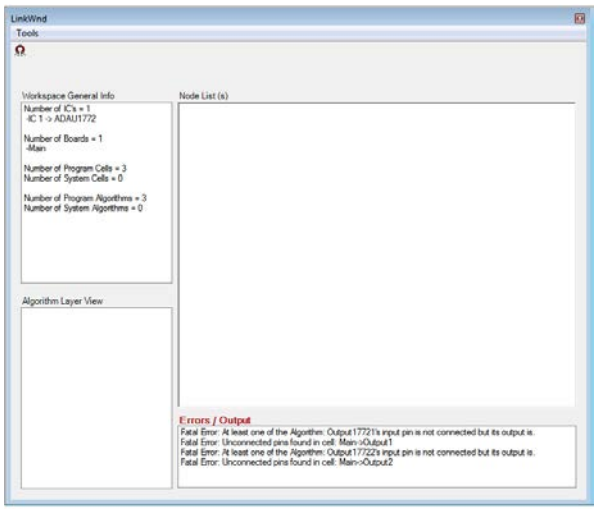

Figure 29. Compile Error

The signal flow should now be running on the evaluation board, and the audio should pass from the input to the output. The volume can be changed in real-time by using the buttons on the board.

USING THE EVALUATION BOARD

POWER

Power can be supplied to the EVAL-ADAU1772Z in one of three ways. When Jumper J3 is in the USB/EXT position, power can be supplied by connecting the EVAL-ADUSB2EBZ (USBi) board connected to J1 (see Figure 30) or by connecting a tip positive 3.8 V dc to 6 V dc power supply on J2.

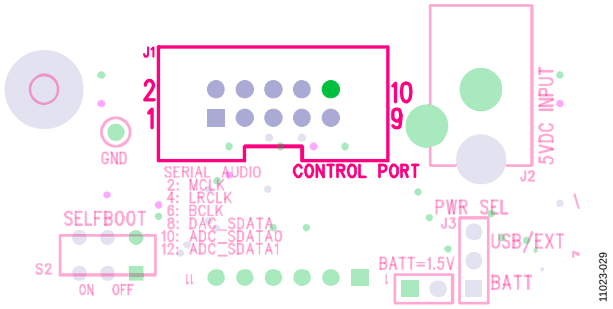

Figure 30. Header J1, Control Port

To supply power via a 1.5 V battery, J3 must be set to the BATT position, and the battery must be connected to J5. The on-board regulator generates the 3.3 V dc or 1.8 V dc supply, determined by S1, for the on-board circuitry. LED D1 lights up when power is supplied to the board. To connect power to the ADAU1772, connect the J8, J10, J12, and J17 jumpers (see Figure 31).

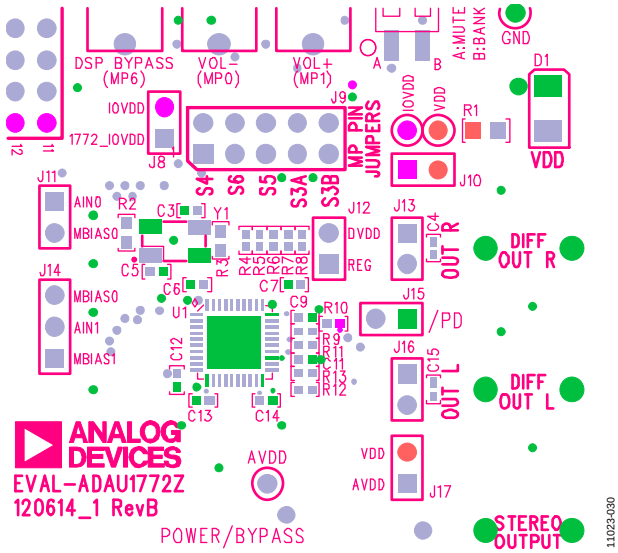

Figure 31. Power Jumpers

INPUTS AND OUTPUTS

The EVAL-ADAU1772Z has multiple audio input and output options, including digital and analog. There are four single-ended analog inputs that are configurable as microphone or line inputs, dual stereo digital microphone inputs, and two differential outputs that can also be used in a single-ended configuration.

Analog Microphone Inputs

For microphone signals, the ADAU1772 analog inputs can be configured as single-ended inputs with optional programmable gain amplifier (PGA) mode.

Microphone Bias

To add MBIAS0 to AIN0, connect a jumper to the J11 header. Similarly, MBIAS1 or MBIAS0 can be added to AIN1 by connecting a jumper to the J14 header (see Figure 32).

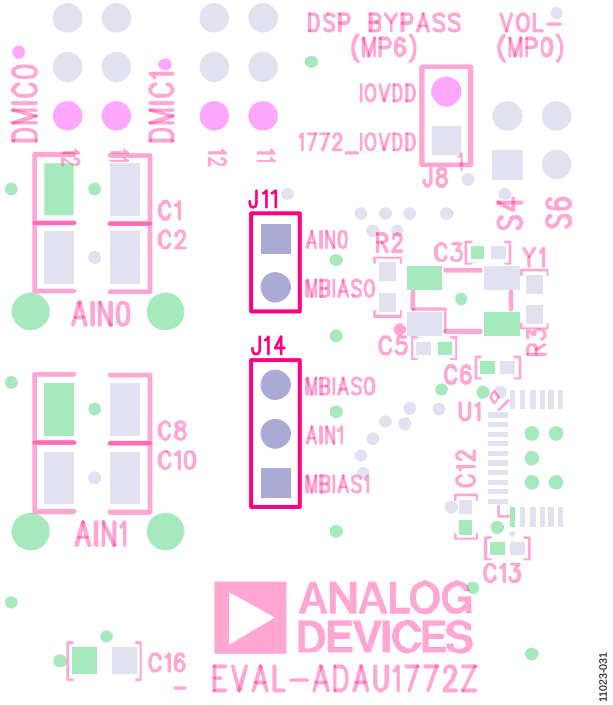

Figure 32. Microphone Bias Headers

Enable the microphone bias circuitry in the **PGA/ADC** tab of SigmaStudio to use it. The appropriate gain settings can also be chosen here (see Figure 33).

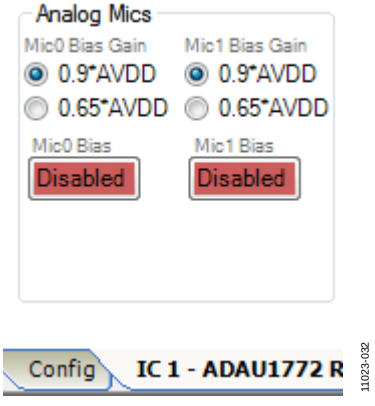

Figure 33. Microphone Bias Enable and Gain

Stereo Line Input

The stereo input jack, J22, accepts a standard stereo TRS 1/8-inch mini-plug (tip = left, ring = right) with two channels of audio.

Digital Microphones

PDM digital microphones can be connected to standard 0.100" headers (J6 and J7). For example, the Analog Devices ADMP521 digital microphone on the ADMP521Z evaluation board plugs directly into the header.

To use the digital microphone headers on the EVAL-ADAU1772Z, ensure that the proper settings have been made in SigmaStudio. Navigate to the **Pin/Pad Control** tab in the **Hardware Configuration/ADAU1772 Register Control** section. Change the value of the **CLKOUT/ADC_SDATA1/MP6** drop-down menu to **Clock Output** (see Figure 34).

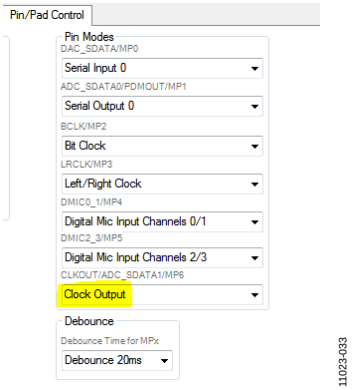

Figure 34. MP6, Clock Output

To set the value of BCLK, go to the **PLL & Clock Control** tab and change the value of the **Output Clock Frequency** drop-down menu to the desired division on MCLK (see Figure 35).

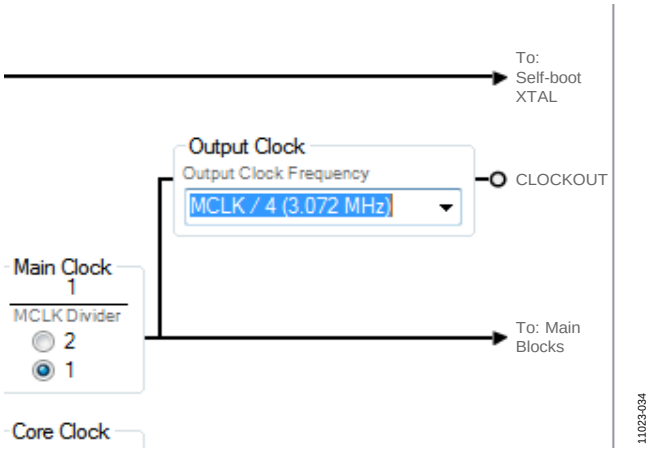

Figure 35. Clock Output Enabled/Divided

Now, set the input of the ADAU1772 to be the digital microphones instead of the ADCs by toggling the appropriate **Decimator Source** settings. Navigate to the **PGA/ADC** tab to find and set the following switches (see Figure 36).

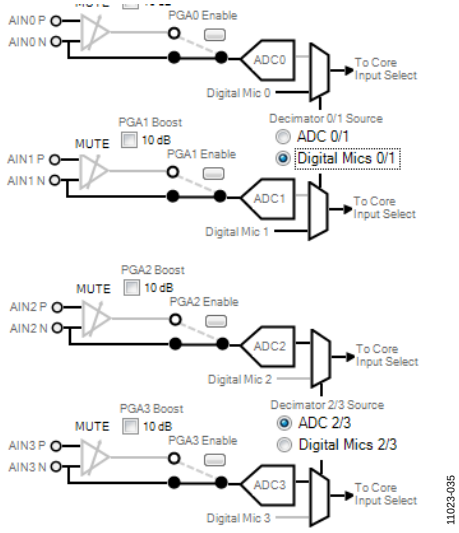

Figure 36. Decimator Source

The digital microphones can now be routed via the appropriate inputs on the **Audio Input** cell.

Headphone Output

The headphone output, J23, connects to any standard 1/8-inch mini-plug stereo headphones. By setting the HP_EN_L and HP_EN_R bits in the headphone line output select register (Address 0x0043), the output pins can be driven either by a line output driver or by a headphone driver. Headphones can be driven either single ended or differentially, and there are bits to disable the LN and RN pins if single ended.

Line Outputs

The analog output pins, J19 and J21, can be used to drive differential loads. In their default settings, these pins can drive line loads of 10 Ω or greater.

To use an external speaker, wires can be soldered to the unpopulated header pads, J13 and J16 (see Figure 37).

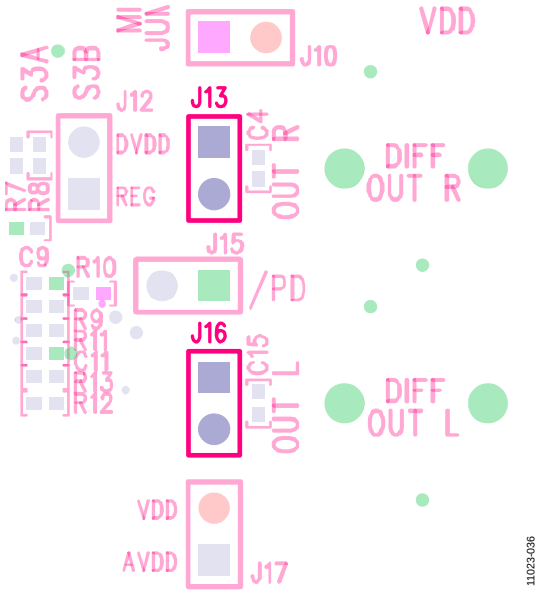

Figure 37. Unpopulated J13 and J16 Headers

PDM Modulator Output

The ADAU1772 has a 2-channel PDM modulator. The PDM output and clock source are both located on the MP pins. To use this functionality, set **ADC_SDATA0/PDMOUT/MP1** to **PDM Modulator Output** and **CLKOUT/ADC_SDATA1/MP6** to **Clock Output**. This can be done in the **Pin/Pad Control** tab (see Figure 38).

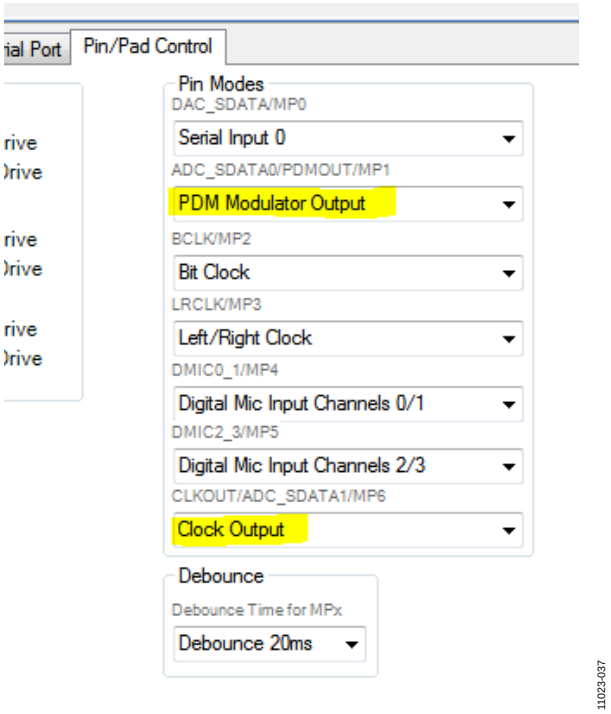

Figure 38 PDM Modulator Output and Clock Output

The **CLOCK OUT** is located on the J4 header, Pin 12. The **PDM OUTPUT** is located on the J4 header, Pin 10 (see Figure 39).

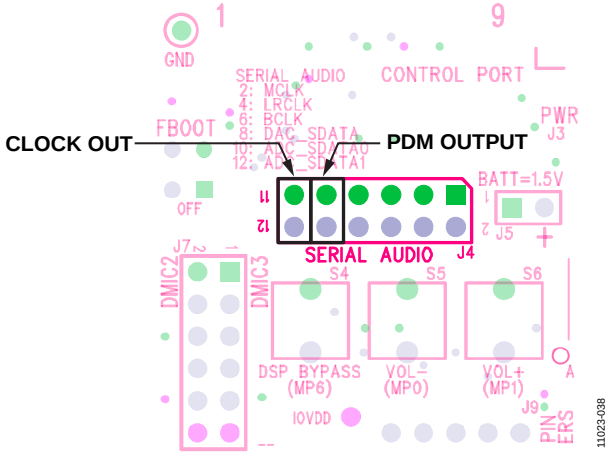

Figure 39. PDM Output and Clock Output Pins

MP PINS

The MP pin jumpers, Header J9, provide access to the MP pins (MP0, MP1, MP2, MP3, and MP6) of the ADAU1772, as well as facilitate the use of the push-buttons on the EVAL-ADAU1772Z board. See Figure 53 for the pinout of the header. These jumpers are used to enable the use of the volume control, mute, and other capabilities of the ADAU1772.

To use the full functionality of the MP pins on the ADAU1772, change the selections in the drop-down menus under the **Pin/Pad Control** tab in the **Hardware Configuration/ADAU1772 Register Control** section of SigmaStudio (see Figure 40).

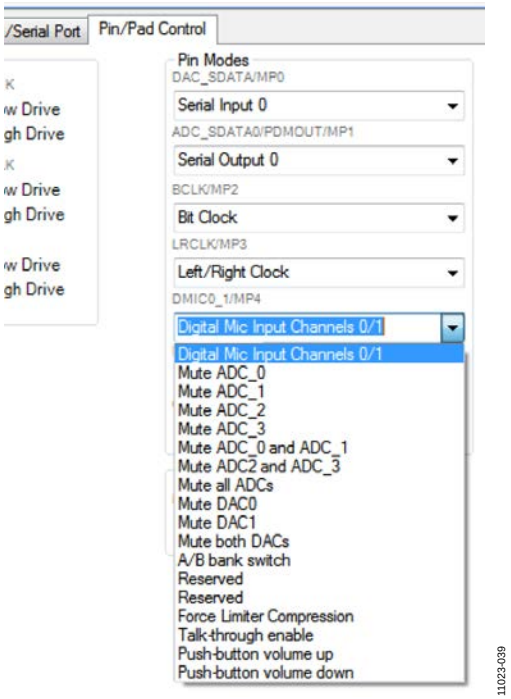

Figure 40. MP Pins Drop-Down Menus

The MP pins, MP4 and MP5, are connected to the digital microphone headers, J6 and J7.

SERIAL AUDIO INTERFACE

Serial audio signals in I²S, left justified, right justified, or TDM format are available via the Serial Audio Interface Header J4. This header also includes master clock input and output connection pins. To use MCLK on the J4 header, first install a resistor across the R2 pads. The R2 resistor is not populated from the factory. To use an external MCLK, remove the R3 resistor from the board to eliminate contention from the XTAL oscillator on the MCLK line (see Figure 41).

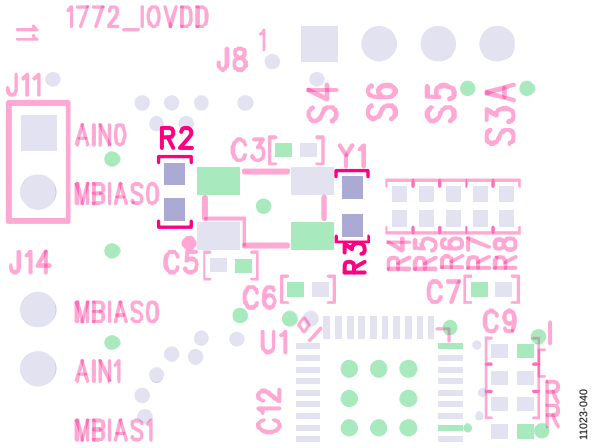

Figure 41. R2 and R3

TDM/I²S Stream

To use the serial audio outputs, connect the LRCLK, BCLK, and SDATA lines to the appropriate MP pins on the evaluation board. The connections can be located on the J4 header. The silk screen above the header helps identify where to connect the clocks and data (see Figure 42).

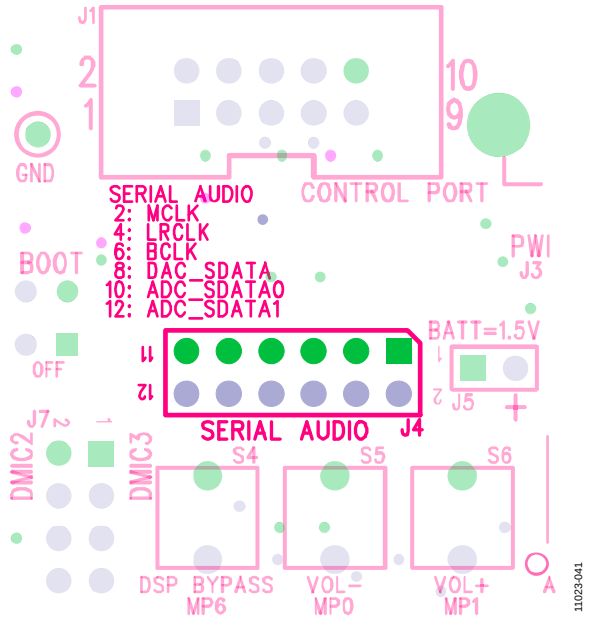

Figure 42. Serial Audio Port

Once connected, use SigmaStudio to set the registers for the desired operation. In the **Output/Serial Port** tab, under the **Serial Port Control** section, the settings can be manipulated to create the specific data stream desired. These settings include **Serial Port FS** (sample rate), **Serial Port Mode**, **Serial Port Format**, **LRCLK/BCLK Mode** (slave or master), **BCLK Data-Change Edge**, **Bit Width in TDM mode BCLK Cycles per Channel**, **Data IO on LSB/MSB**, **Unused TDM Outputs**, **LRCLK Mode** (as pulse or 50% duty cycle), and **LRCLK Polarity** (see Figure 43).

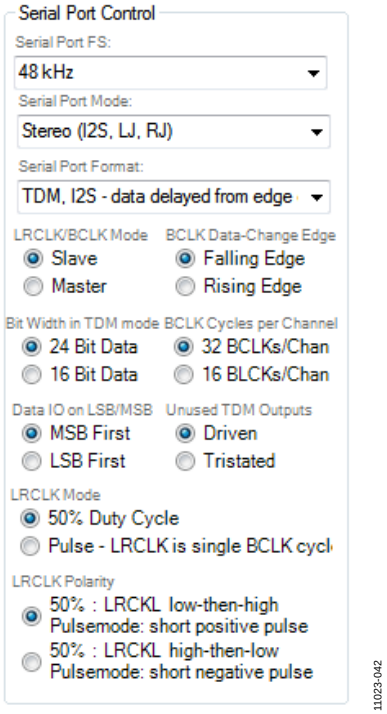

Figure 43. Serial Port Control

If using TDM mode, ensure that the appropriate TDM output channels have been enabled in the **TDM Output Channel** section (see Figure 44).

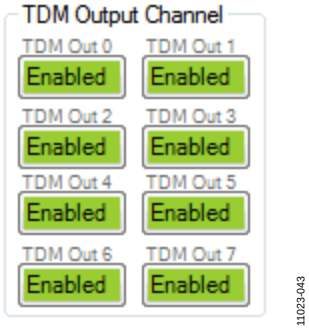

Figure 44. TDM Output Channel

Use the **Signal Routing** tab to route the core outputs, ADCs, or serial inputs to the either of the two available serial output lines. Ensure that **Output ASRC** is switched to **Enabled** (see Figure 45).

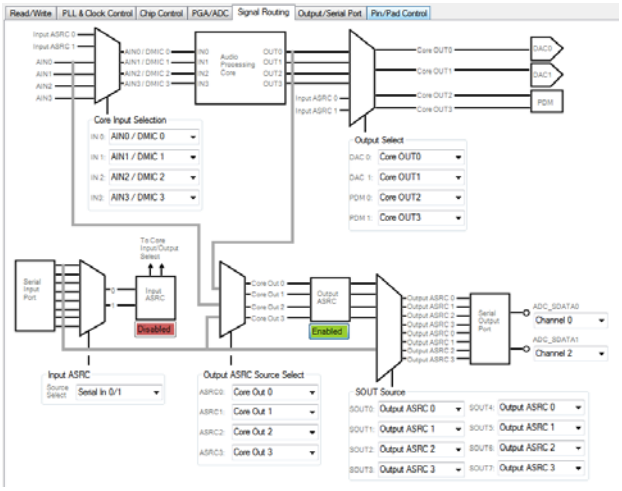

Figure 45. Signal Routing

COMMUNICATIONS HEADER (J1)

J1 connects to the EVAL-ADUSB2EBZ USBi. More information about the USBi can be found in Application Note AN-1006.

The IC defaults to I²C mode; however, it can be put into SPI control mode by pulling the $\overline{\text{CLATCH}}$ pin low three times.

SELF-BOOT

To use the ADAU1772 self-boot function, go to the **Hardware Configuration** tab and add an **E2Prom** IC to the USBi interface from the **Tree Toolbox** (see Figure 46).

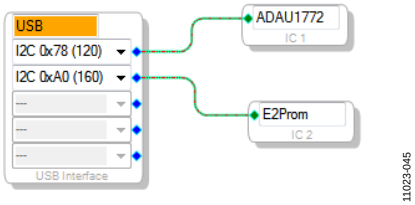

Figure 46. E2Prom

Before writing to the E2PROM, ensure that it has been erased by clearing it from SigmaStudio. To do this, right-click on **E2Prom**, select the **Read/Write** window, and click **Clear E2Pro** to clear the memory (see Figure 47).

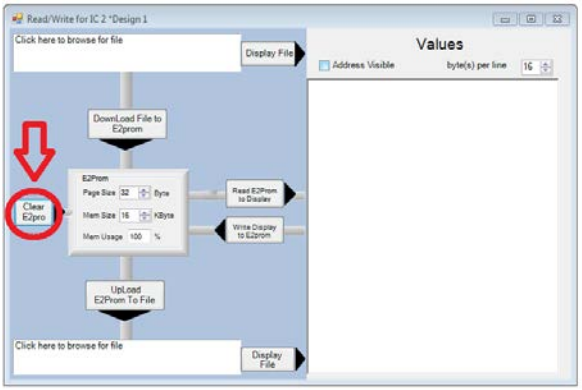

Figure 47. Clear E2pro

To **Link-Compile-Download** the project (see Figure 28), right-click on ADAU1772 and select **Write Latest Compilation to E2PROM** (see Figure 48).

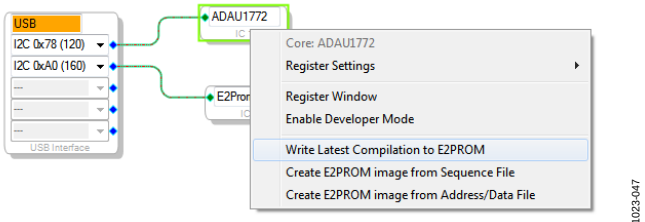

Figure 48. Write to E2Prom

Once the project has been written to the E2PROM, move the self-boot switch, S2, to the **ON** position (see Figure 49). This ensures that the ADAU1772 boots from the E2PROM when it powers up.

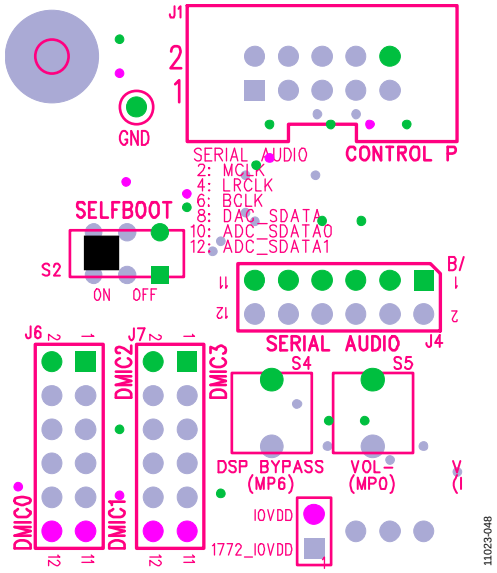

Figure 49. Self-Boot Switch On

POWER-DOWN

The power-down header, J15 (**/PD**) on the silkscreen of the board provides access to the power-down pin on the ADAU1772. Put a jumper on the header to power down all analog and digital circuits. Before enabling **/PD** ensure to mute the outputs to avoid any pops or clicks when the IC is powered down.

HARDWARE DESCRIPTION

JUMPERS

Table 1. Connector and Jack Descriptions

Reference	Functional Name	Description
J1	Control port	It facilitates communication between the evaluation board and USBi board.
J2	5 V dc input	It provides external power to the board. It accepts 3.8 V dc to 6 V dc input.
J3	Power select	Jumper used to select power source for the evaluation board. Selectable between USB/external and battery.
J4	Serial audio	It accepts serial audio signals in I²S, left justified, right justified, or TDM format.
J5	Battery 1.5 V	Jumper used to power the board via a 1.5 V battery.
J6, J7	Digital microphone inputs	Headers that allow digital microphones to be connected to the evaluation board.
J8	IOVDD 1772_IOVDD	Jumper supplies power to the IOVDD supply of the ADAU1772 from the power supply section
J9	MP pin jumpers	Jumpers used to connect push-buttons on the board to MP Pins on the ADAU1772.
J10	IOVDD VDD	Jumper connects IOVDD on the ADAU1772 to VDD (3.3 V board supply) on the evaluation board.
J11, J14	Microphone bias	Jumpers used to add a microphone bias to the analog microphone inputs, AIN0 and AIN1.
J12	DVDD regulator (REG)	Jumper connects DVDD on the ADAU1772 to its internal regulator.
J13	Out R	Jumper provides access to the mono differential output right.
J15	Power down	Jumper used to power down the ADAU1772 analog and digital circuits.
J16	Out L	Jumper provides access to the mono differential output left.
J17	VDD AVDD	It connects AVDD on the ADAU1772 to VDD (3.3 V board supply) on the evaluation board.

INTEGRATED CIRCUITS (IC)

Table 2. IC Descriptions

Reference	Functional Name	Description
U1	ADAU1772 SigmaDSP	Digital audio signal processor
U2	Microchip M24C32-F serial EEPROM	Self-boot memory
U3	ADP1713AUJZ low dropout (LDO) regulator	Linear regulator that generates 1.5 V from an off-board power supply
U4	ADP1607 boost regulator	Boost regulator that generates 1.8 V or 3.3 V for the board supply from a 1.5 V input

LED

Table 3. LED Description

Reference	Functional Name	Description
D1	VDD power LED	It illuminates when the evaluation board is powered up.

EVALUATION BOARD SCHEMATICS AND ARTWORK

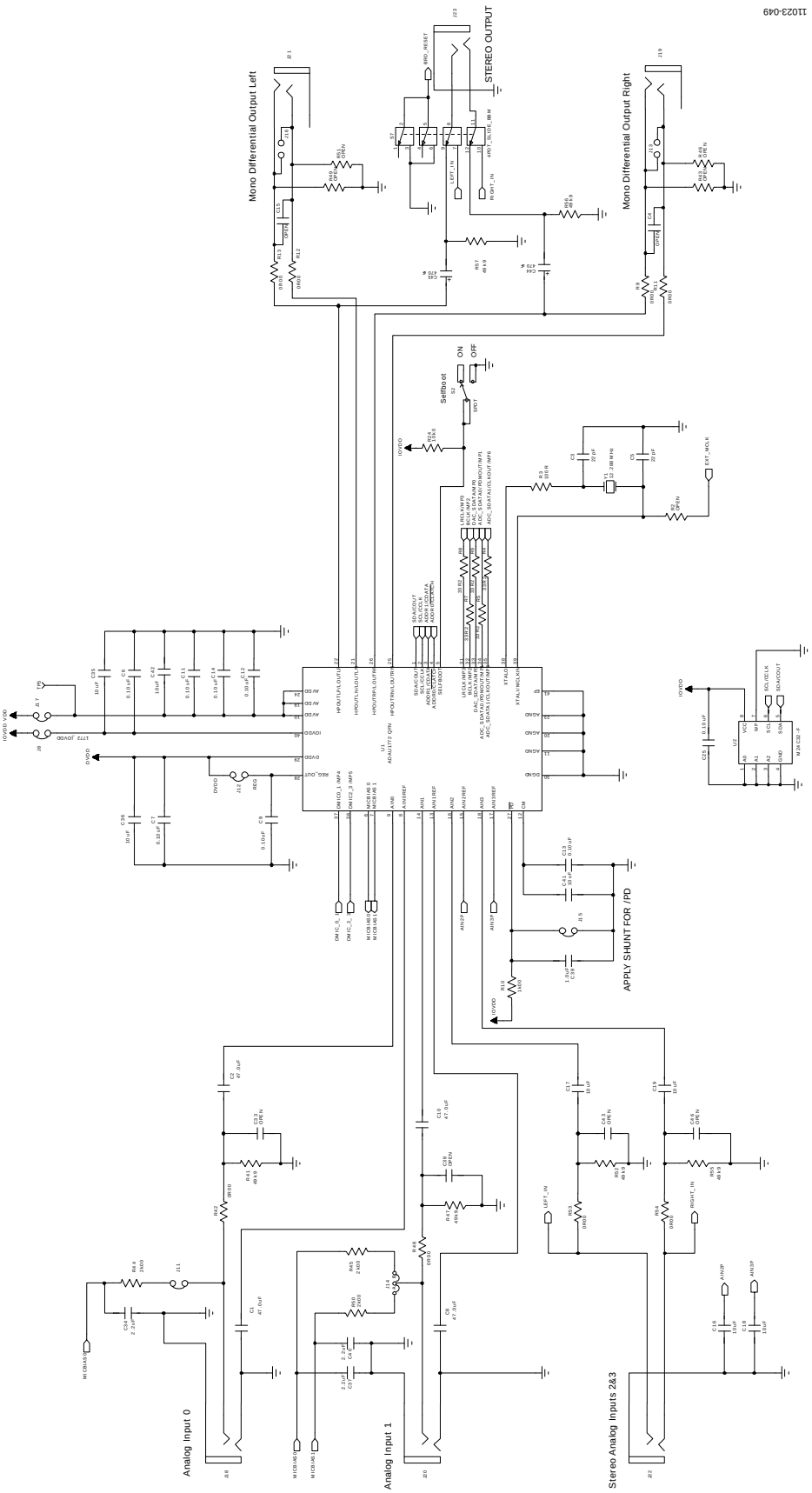

Figure 50. EVAL-ADAU1772Z Evaluation Board Schematic—Digital and Analog I/O, Master Clock Generation

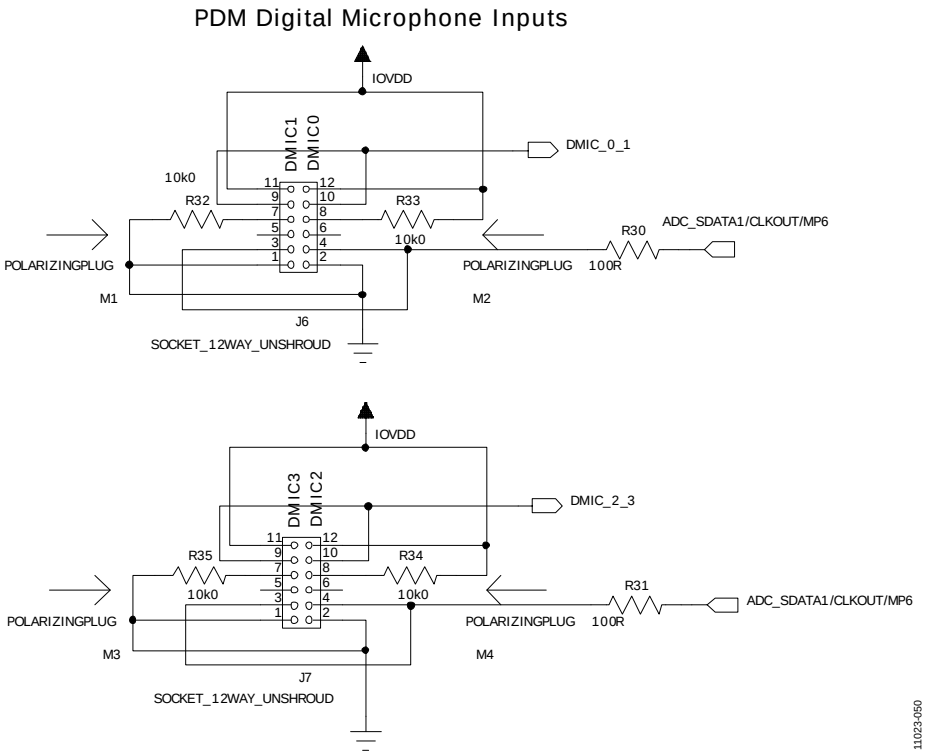

Figure 51. EVAL-ADAU1772Z Evaluation Board Schematic—PDM Digital Microphone Interface

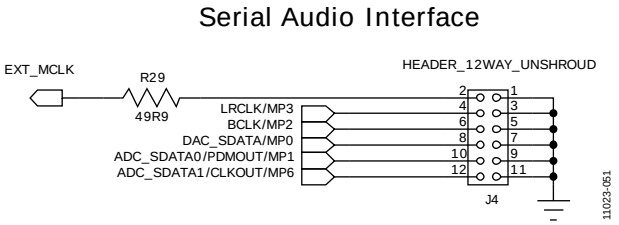

Figure 52. EVAL-ADAU1772Z Evaluation Board Schematic—Serial Audio Interface

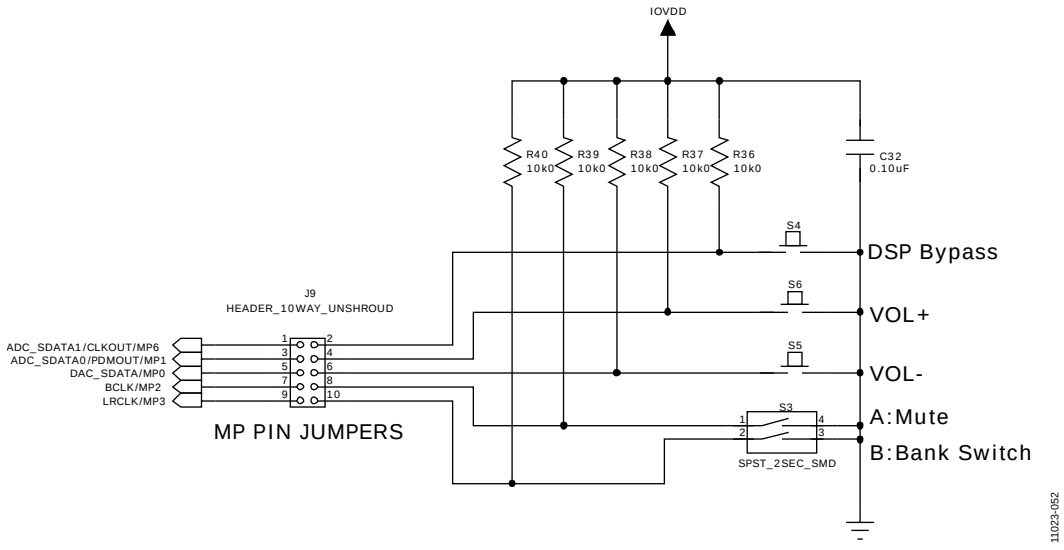

Figure 53. EVAL-ADAU1772Z Evaluation Board Schematic—MP Pin Jumpers

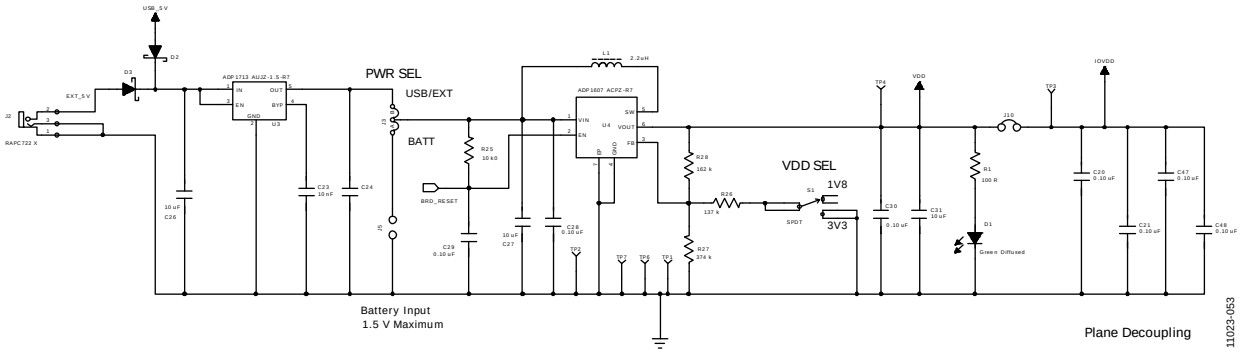

Figure 54. EVAL-ADAU1772Z Evaluation Board Schematic—Power Supply

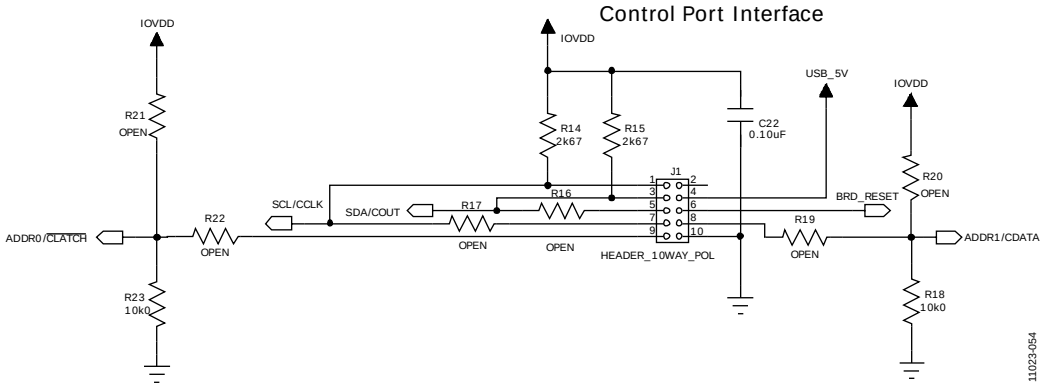

Figure 55. EVAL-ADAU1772Z Evaluation Board Schematic—Control Port Interface

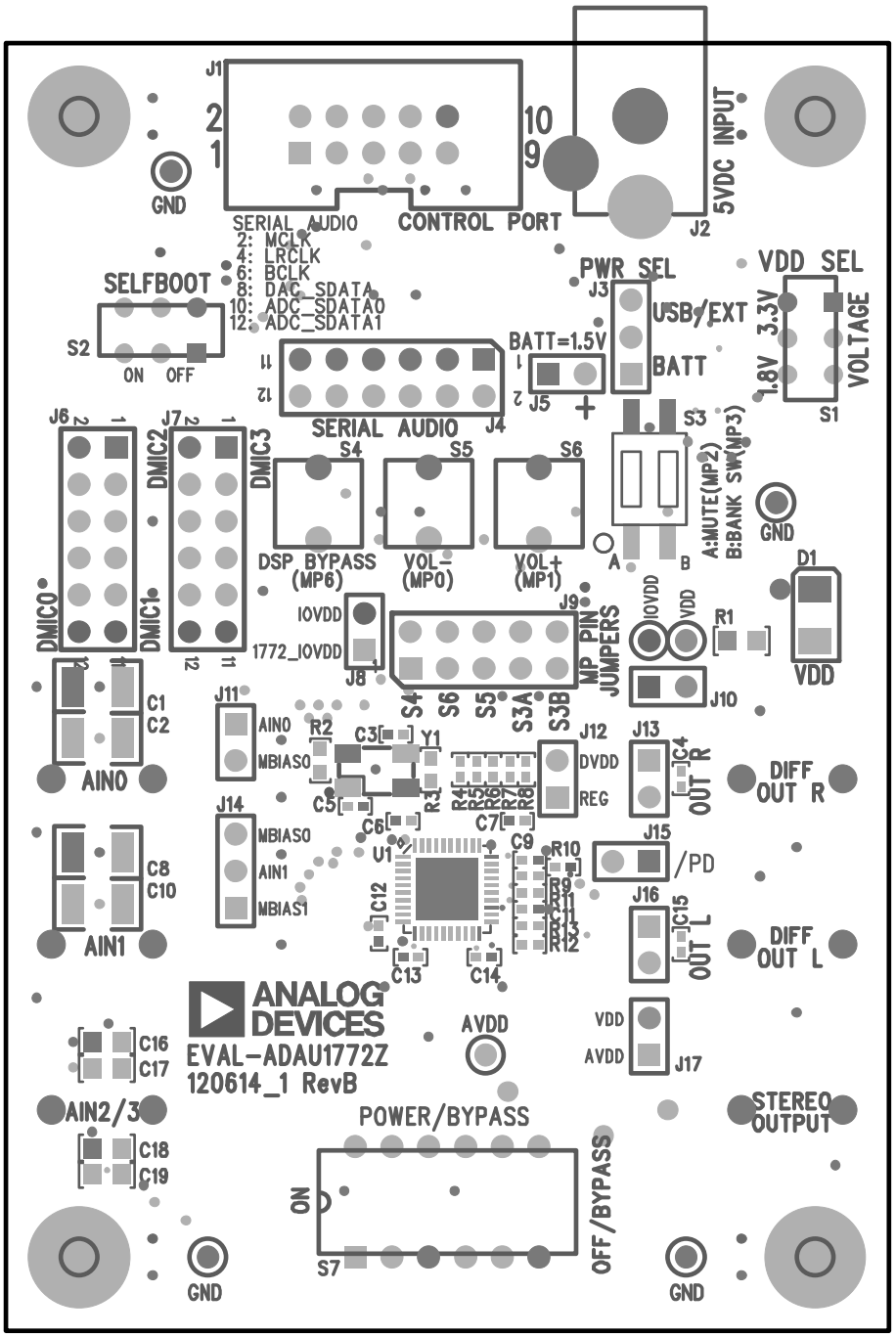

Figure 56. EVAL-ADAU1772Z Evaluation Board Layout—Top Assembly

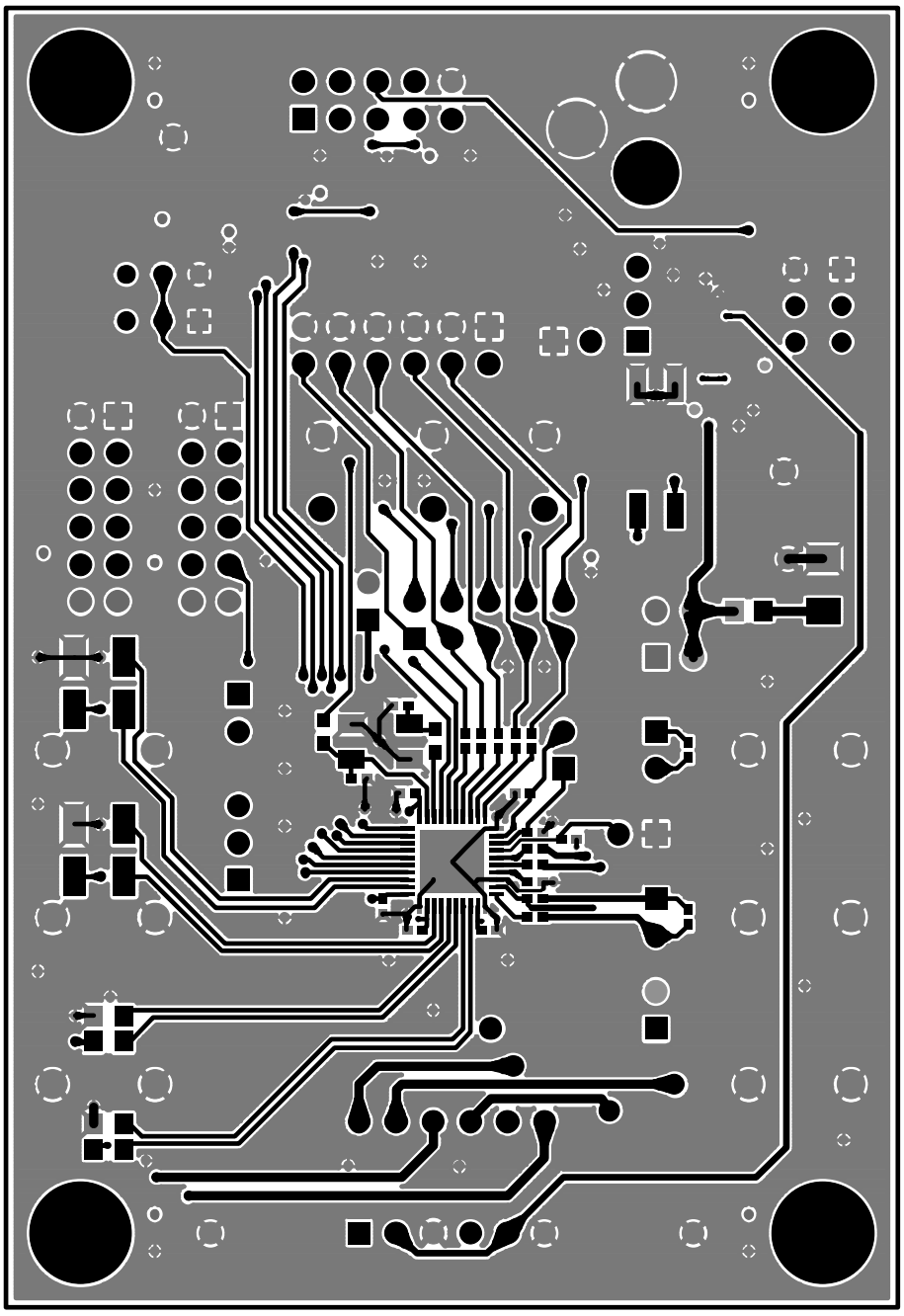

Figure 57. EVAL-ADAU1772Z Evaluation Board Layout—Top Copper

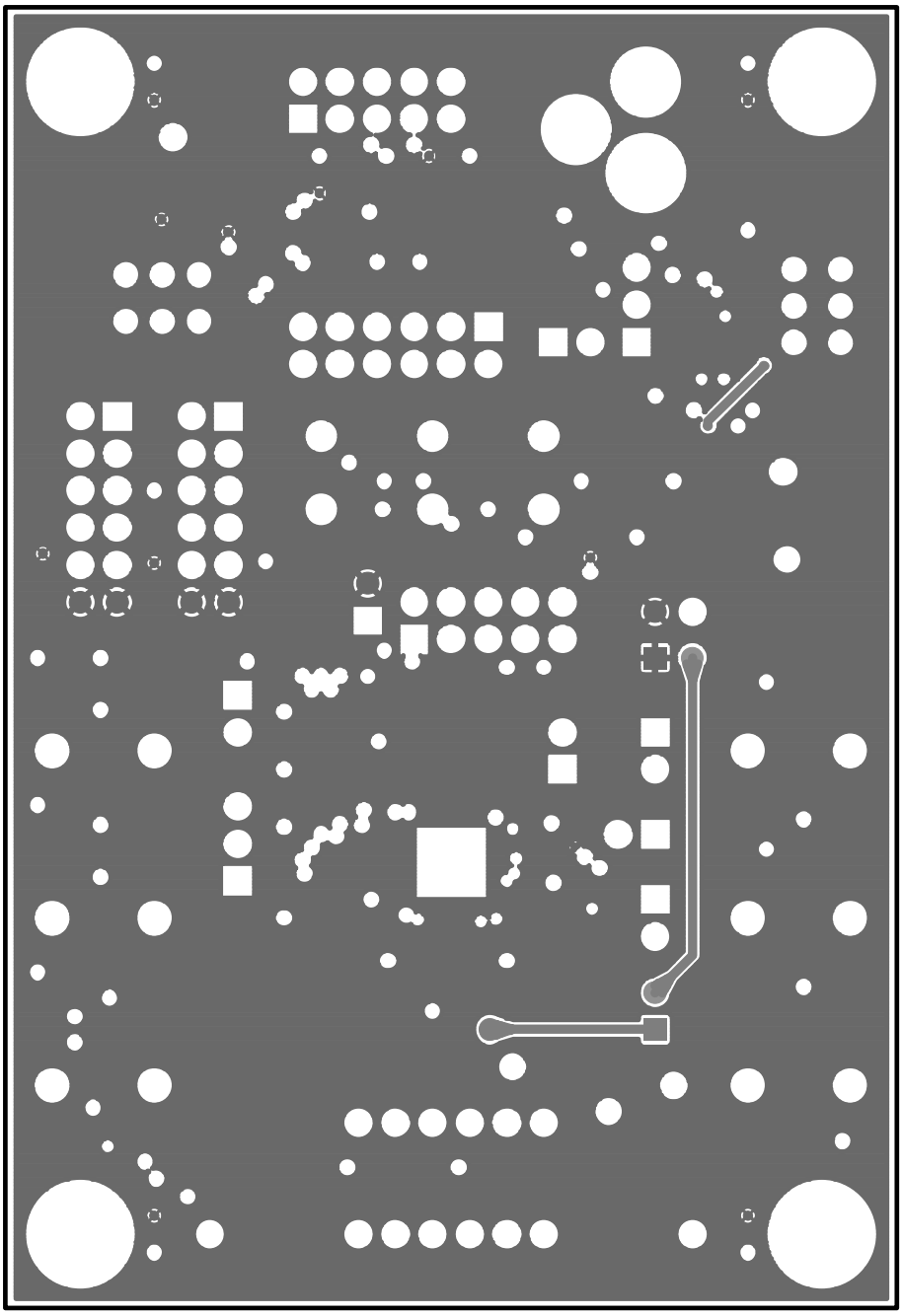

Figure 58. EVAL-ADAU1772Z Evaluation Board Layout—Power Plane

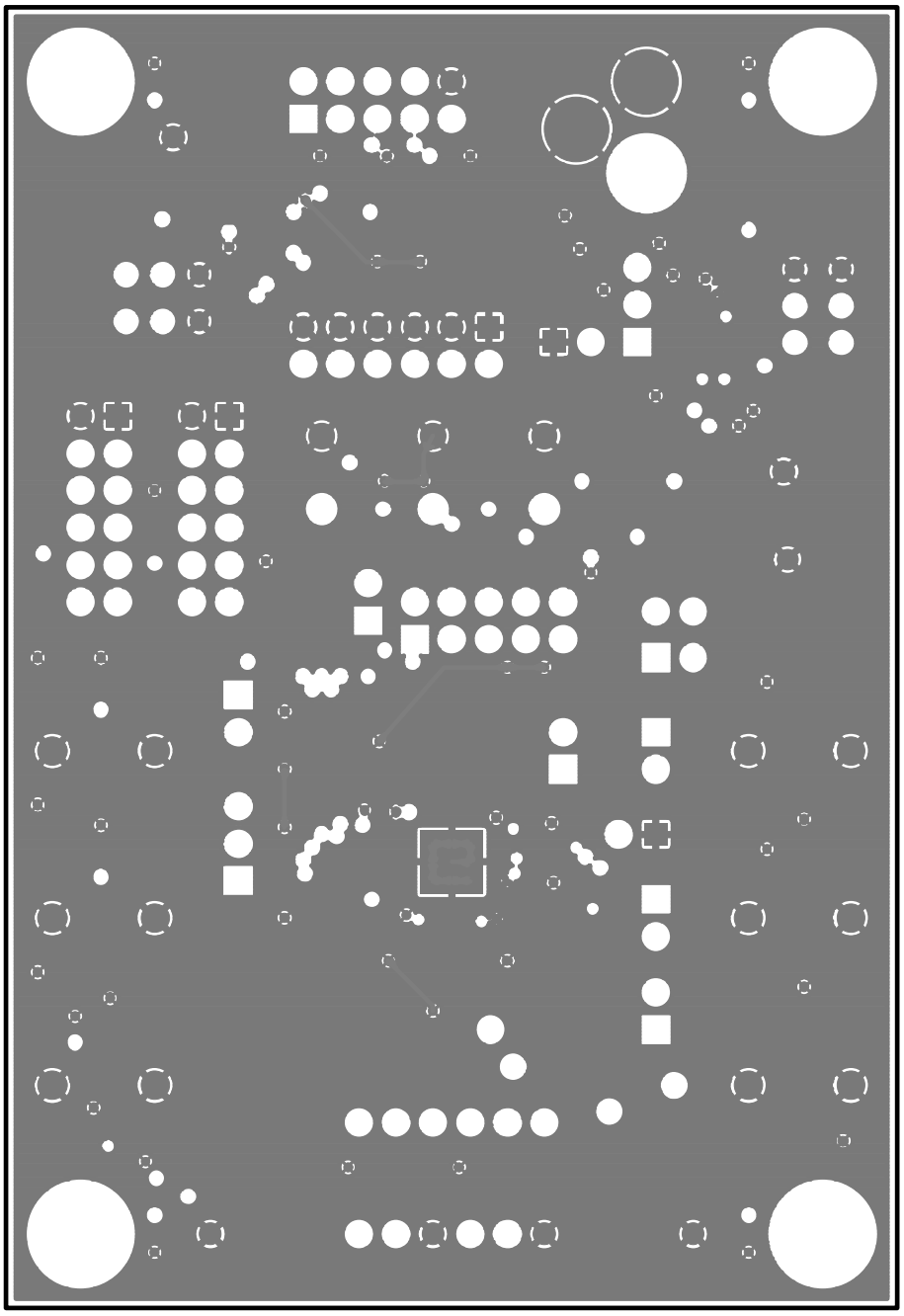

Figure 59. EVAL-ADAU1772Z Evaluation Board Layout—Ground Plane

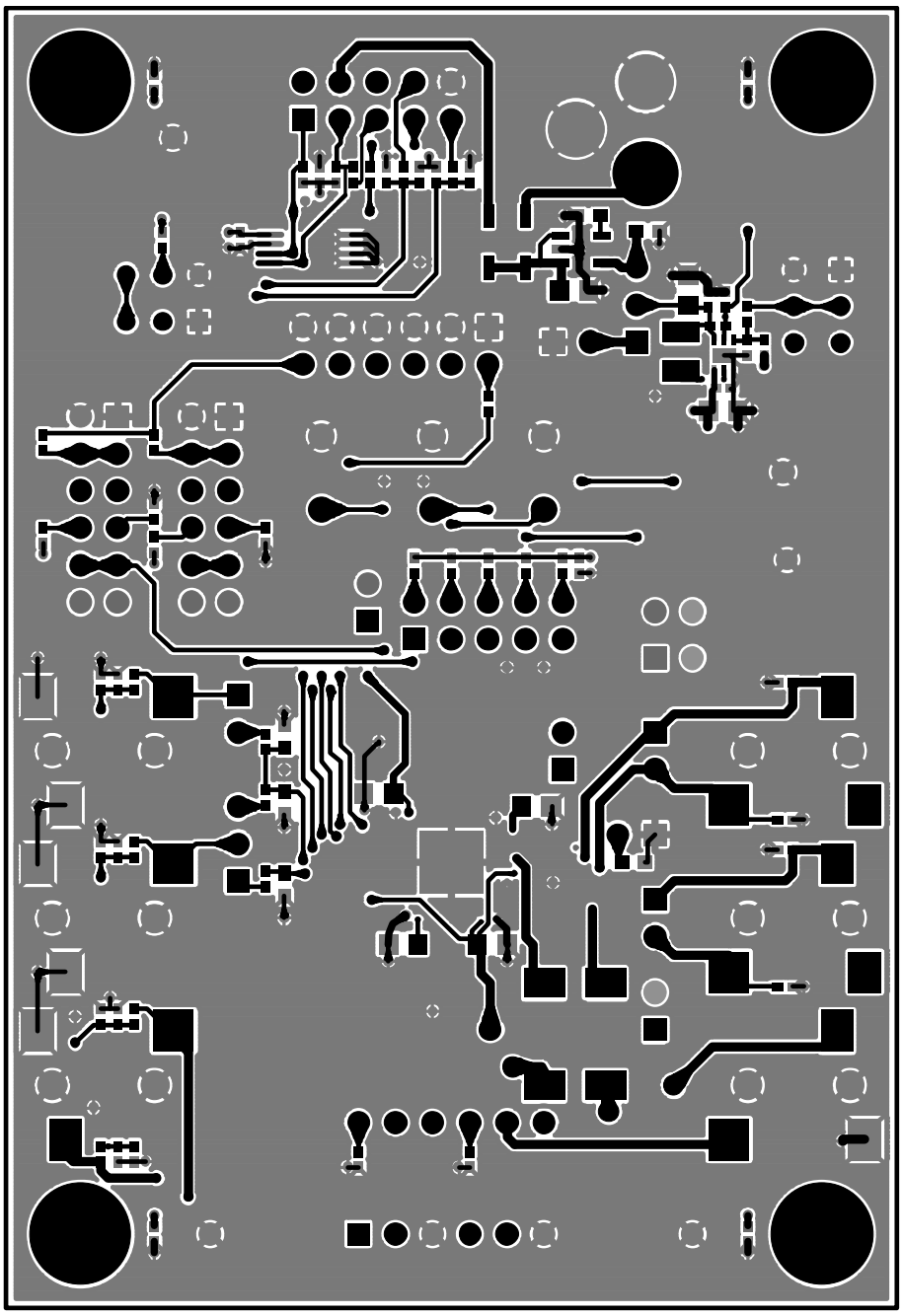

Figure 60. EVAL-ADAU1772Z Evaluation Board Layout—Bottom Copper

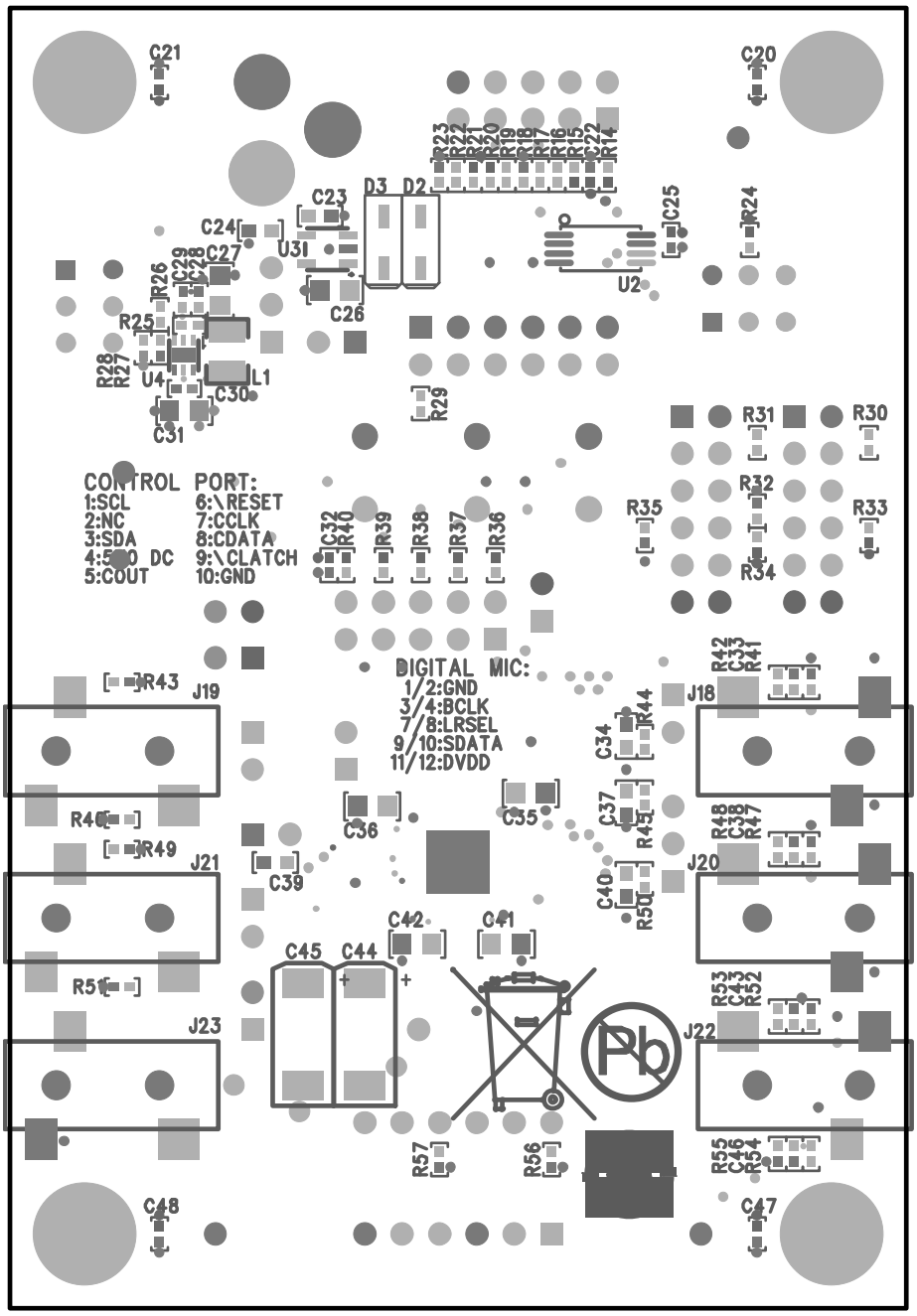

Figure 61. EVAL-ADAU1772Z Evaluation Board Layout—Bottom Assembly

ORDERING INFORMATION

BILL OF MATERIALS

Table 4.

Qty.	Designator	Description	Part Number	Manufacturer
17	C6 to C7, C9, C11 to C14, C20 to C22, C25, C28 to C30, C32, C47 to C48	0.10 µF multilayer ceramic, 16 V, X7R (0402)	ECJ-0EX1C104K	Panasonic EC
8	R9, R11 to R13, R42, R48, R53 to R54	0 Ω chip resistor, 5%, 63 mW, thick film, 0402	ERJ-2GE0R00X	Panasonic EC
1	C24	1.0 µF multilayer ceramic, 16 V, X7R (0603)	GRM188R71C105KA12D	Murata ENA
1	C39	1.0 µF multilayer ceramic, 16 V, X7R (0603)	EMK107BJ105KA-TR	Taiyo Yuden
2	R30, R31	100 Ω chip resistor, 1%, 63 mW, thick film, 0402	MCR01MZPF1000	Rohm
1	R3	100 Ω chip resistor, 1%, 100 mW, thick film, 0603	ERJ-3EKF1000V	Panasonic EC
1	R1	100 Ω chip resistor, 1%, 125 mW, thick film, 0805	ERJ-6ENF1000V	Panasonic EC
13	R18, R23 to R25, R32 to R40	10 kΩ chip resistor, 1%, 63 mW, thick film, 0402	MCR01MZPF1002	Rohm
1	C23	10 nF multilayer ceramic, 25 V, NP0 (0603)	C1608C0G1E103J	TDK Corporation
11	C16 to C19, C26 to C27, C31, C35 to C36, C41 to C42	10 µF multilayer ceramic, 10 V, X7R (0805)	GRM21BR71A106KE51L	Murata ENA
1	R26	137 kΩ chip resistor, 1%, 63 mW, thick film, 0402	ERJ-2RKF1373X	Panasonic ECG
1	R28	162 kΩ chip resistor, 1%, 63 mW, thick film, 0402	ERJ-2RKF1623X	Panasonic ECG
1	R10	1.00 kΩ chip resistor, 1%, 63 mW, thick film, 0402	ERJ-2RKF1001X	Panasonic EC
3	C34, C37, C40	2.2 µF multilayer ceramic, 10 V, X7R (0603)	GRM188R71A225KE15D	Murata ENA
1	L1	2.2 µH inductor	LQH32PN2R2NN0L	Murata Electronics
2	C3, C5	22 pF multilayer ceramic, 50 V, NP0 (0402)	GRM1555C1H220JZ01D	Murata ENC
3	R44 to R45, R50	2.00 kΩ chip resistor, 1%, 63 mW, thick film, 0402	ERJ-2RKF2001X	Panasonic EC
2	R14 to R15	2.67 kΩ chip resistor, 1%, 63 mW, thick film, 0402	CRCW04022K67FKED	Vishay/Dale
5	R4 to R8	33.2 Ω chip resistor, 1%, 63 mW, thick film, 0402	RMCF0402FT33R2	Stackpole
1	R27	374 kΩ chip resistor, 1%, 63 mW, thick film, 0402	ERJ-2RKF3743X	Panasonic ECG
2	C44 to C45	470 µF SMD tantalum capacitor, SMD D, 6.3 V	TR3D477M6R3C0200	Vishay/Sprague
4	C1 to C2, C8, C10	47.0 µF ceramic capacitor, 6.3 V, X7R, 1210	GCM32ER70J476KE19L	Murata
6	R41, R47, R52, R55 to R57	49.9 kΩ chip resistor, 1%, 63 mW, thick film, 0402	CRCW040249K9FKED	Vishay/Dale
1	R29	49.9 kΩ chip resistor, 1%, 63 mW, thick film, 0402	MCR01MZPF49R9	Rohm
1	S7	4PDT slide switch vertical break-before-make	ASE4204	Tyco Electronics
1	Y1	12.288 MHz crystal, SMT, 18 pF	ABM3B-12.288MHZ-10-1-U-T	Abracon Corporation
1	U1	Four ADC, two DAC ANC Codec	ADAU1772	Analog Devices
1	U4	Synchronous boost dc-to-dc converter	ADP1607ACPZ-R7	Analog Devices
1	U3	Fixed low dropout voltage regulator	ADP1713AUJZ-1.5-R7	Analog Devices
1	J1	10-way shroud polarized header, 2 × 5	N2510-6002RB	3M
1	J9	10-way unshrouded jumper, 2 × 6	PBC05DAAN or cut PBC36DAAN	Sullins Connector Solutions
1	J4	12-way unshrouded jumper	PBC06DAAN or cut PBC36DAAN	Sullins Connector Solutions
6	J8, J10 to J12, J15, J17	2-pin header, unshrouded jumper, 0.10"; use shunt Tyco 881545-2	PBC02SAAN; or cut PBC36SAAN	Sullins Connector Solutions
2	J3, J14	3-position SIP header	PBC03SAAN; or cut PBC36SAAN	Sullins Connector Solutions
1	D1	Green diffused, 10 millicandela, 565 nm, 1206,	SML-LX1206GW-TR	Lumex Opto
1	U2	32K, I^2C CMOS serial EEPROM	M24C32-F	STMicroelectronics
2	D2 to D3	Schottky, 30 V, 0.5 A, SOD123 diode	MBR0530T1G	On Semiconductor
6	J18 to J23	Stereo mini jack	SJ-3523-SMT	CUI, Inc.
10	R16 to R17, R19 to R22, R43, R46, R49, R51	Do not stuff	Open	Do not stuff
1	R2	Do not stuff	Open	Do not stuff
6	C4, C15, C33, C38, C43, C46	Do not stuff	Open	Do not stuff

Qty.	Designator	Description	Part Number	Manufacturer
1	J2	Mini power jack, 0.08", R/A, TH	RAPC722X	Switchcraft
2	J6 to J7	12-way socket unshrouded, 2 × 6	PPPC062LFBN-RC	3M
2	S1 to S2	SPDT slide switch PC mount	EG1271	E-Switch
1	S3	2 section SPST SMD switch raised act	219-2LPST	CTS Corporation
3	S4 to S6	Tact switch long stroke (normally open)	B3M-6009	Omron Electronics
7	TP1 to TP7	Mini test point, white, 0.1", OD	5002	Keystone Electronics

NOTES

NOTES

I²C refers to a communications protocol originally developed by Philips Semiconductors (now NXP Semiconductors).



ESD Caution

ESD (electrostatic discharge) sensitive device. Charged devices and circuit boards can discharge without detection. Although this product features patented or proprietary protection circuitry, damage may occur on devices subjected to high energy ESD. Therefore, proper ESD precautions should be taken to avoid performance degradation or loss of functionality.

Legal Terms and Conditions

By using the evaluation board discussed herein (together with any tools, components documentation or support materials, the "Evaluation Board"), you are agreeing to be bound by the terms and conditions set forth below ("Agreement") unless you have purchased the Evaluation Board, in which case the Analog Devices Standard Terms and Conditions of Sale shall govern. Do not use the Evaluation Board until you have read and agreed to the Agreement. Your use of the Evaluation Board shall signify your acceptance of the Agreement. This Agreement is made by and between you ("Customer") and Analog Devices, Inc. ("ADI"), with its principal place of business at One Technology Way, Norwood, MA 02062, USA. Subject to the terms and conditions of the Agreement, ADI hereby grants to Customer a free, limited, personal, temporary, non-exclusive, non-sublicensable, non-transferable license to use the Evaluation Board FOR EVALUATION PURPOSES ONLY. Customer understands and agrees that the Evaluation Board is provided for the sole and exclusive purpose referenced above, and agrees not to use the Evaluation Board for any other purpose. Furthermore, the license granted is expressly made subject to the following additional limitations: Customer shall not (i) rent, lease, display, sell, transfer, assign, sublicense, or distribute the Evaluation Board; and (ii) permit any Third Party to access the Evaluation Board. As used herein, the term "Third Party" includes any entity other than ADI, Customer, their employees, affiliates and in-house consultants. The Evaluation Board is NOT sold to Customer; all rights not expressly granted herein, including ownership of the Evaluation Board, are reserved by ADI. CONFIDENTIALITY. This Agreement and the Evaluation Board shall all be considered the confidential and proprietary information of ADI. Customer may not disclose or transfer any portion of the Evaluation Board to any other party for any reason. Upon discontinuation of use of the Evaluation Board or termination of this Agreement, Customer agrees to promptly return the Evaluation Board to ADI. ADDITIONAL RESTRICTIONS. Customer may not disassemble, decompile or reverse engineer chips on the Evaluation Board. Customer shall inform ADI of any occurred damages or any modifications or alterations it makes to the Evaluation Board, including but not limited to soldering or any other activity that affects the material content of the Evaluation Board. Modifications to the Evaluation Board must comply with applicable law, including but not limited to the RoHS Directive. TERMINATION. ADI may terminate this Agreement at any time upon giving written notice to Customer. Customer agrees to return to ADI the Evaluation Board at that time. LIMITATION OF LIABILITY. THE EVALUATION BOARD PROVIDED HEREUNDER IS PROVIDED "AS IS" AND ADI MAKES NO WARRANTIES OR REPRESENTATIONS OF ANY KIND WITH RESPECT TO IT. ADI SPECIFICALLY DISCLAIMS ANY REPRESENTATIONS, ENDORSEMENTS, GUARANTEES, OR WARRANTIES, EXPRESS OR IMPLIED, RELATED TO THE EVALUATION BOARD INCLUDING, BUT NOT LIMITED TO, THE IMPLIED WARRANTY OF MERCHANTABILITY, TITLE, FITNESS FOR A PARTICULAR PURPOSE OR NONINFRINGEMENT OF INTELLECTUAL PROPERTY RIGHTS. IN NO EVENT WILL ADI AND ITS LICENSORS BE LIABLE FOR ANY INCIDENTAL, SPECIAL, INDIRECT, OR CONSEQUENTIAL DAMAGES RESULTING FROM CUSTOMER'S POSSESSION OR USE OF THE EVALUATION BOARD, INCLUDING BUT NOT LIMITED TO LOST PROFITS, DELAY COSTS, LABOR COSTS OR LOSS OF GOODWILL. ADI'S TOTAL LIABILITY FROM ANY AND ALL CAUSES SHALL BE LIMITED TO THE AMOUNT OF ONE HUNDRED US DOLLARS ($100.00). EXPORT. Customer agrees that it will not directly or indirectly export the Evaluation Board to another country, and that it will comply with all applicable United States federal laws and regulations relating to exports. GOVERNING LAW. This Agreement shall be governed by and construed in accordance with the substantive laws of the Commonwealth of Massachusetts (excluding conflict of law rules). Any legal action regarding this Agreement will be heard in the state or federal courts having jurisdiction in Suffolk County, Massachusetts, and Customer hereby submits to the personal jurisdiction and venue of such courts. The United Nations Convention on Contracts for the International Sale of Goods shall not apply to this Agreement and is expressly disclaimed.

©2012–2013 Analog Devices, Inc. All rights reserved. Trademarks and registered trademarks are the property of their respective owners.

UG11023-0-6/13(A)



www.analog.com