EV7740DN-01B

15W Stereo Class D Single Ended Audio Amplifier

The Future of Analog IC Technology

DESCRIPTION

The EV7740DN-01B is the evaluation board for the MP7740, a stereo 15W Class D Audio Amplifier. It is one of MPS' products of fully integrated audio amplifiers which dramatically reduce solution size by integrating the following:

250mΩ power MOSFETs

Startup / Shutdown pop elimination

Short circuit protection circuits

The MP7740 utilizes a single ended output structure capable of delivering 15W into 4Ω speakers. MPS Class D Audio Amplifiers exhibit the high fidelity of a Class A/B amplifier at high efficiency. The circuit is based on the MPS' AAM™ proprietary variable frequency topology that delivers excellent linearity, fast response time and operates on a single power supply.

ELECTRICAL SPECIFICATIONS

Parameter	Symbol	Value	Units
Supply Voltage	V_{DD}	24	V

FEATURES

- 15W Output at V_{DD} = 24V into a 4Ω load
- THD+N = 0.05% at 1W, 8Ω, 1KHz
- 90% Efficiency at 15W and V_{DD}=24V with 4Ω load
- Low Noise (103μV Typical)
- 9.5V to 36V Operation from a Single Supply

APPLICATIONS

- Flat Panel TV
- Portable Docking Stations
- Surround Sound DVD Systems
- Televisions
- Multimedia Computers
- Home Stereo Systems

"MPS" and "The Future of Analog IC Technology" are Registered Trademarks of Monolithic Power Systems, Inc.

AAM (Analog Adaptive Modulation) is a Trademark of Monolithic Power Systems, Inc.

EV7740 EVALUATION BOARD



Dimensions (2.4"X x 3.5"Y x 1.2"Z)

Board Number	MPS IC Number
EV7740DN-01B	MP7740

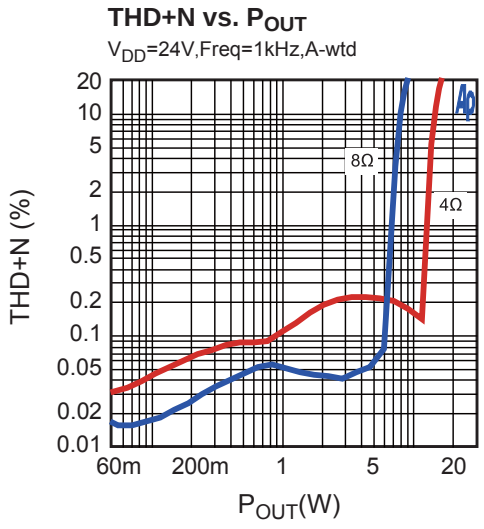

MPS Proprietary Information. Unauthorized Photocopy and Duplication Prohibited.
© 2011 MPS. All Rights Reserved.

EVALUATION BOARD SCHEMATIC

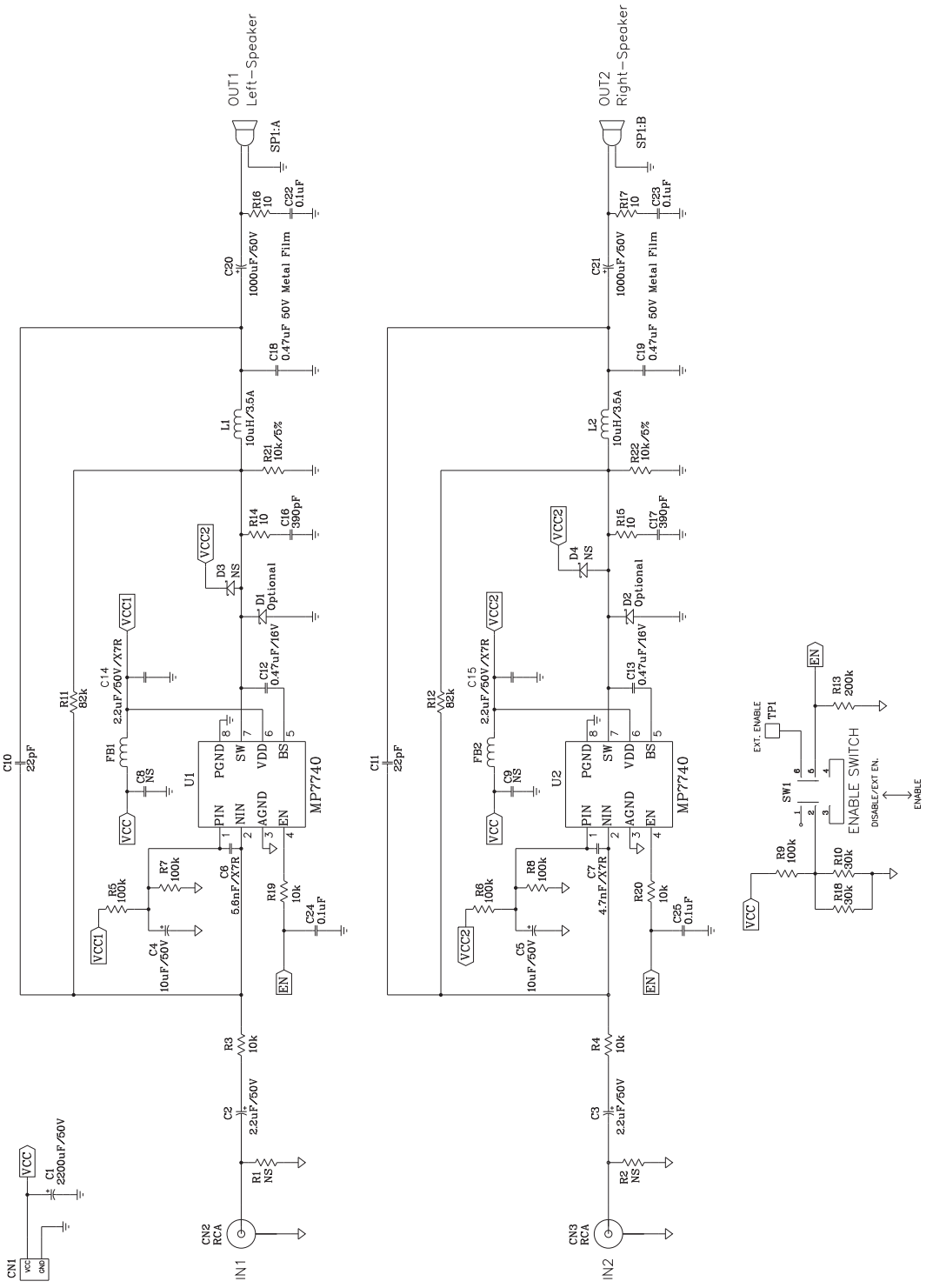

MPS Proprietary Information. Unauthorized Photocopy and Duplication Prohibited.
© 2011 MPS. All Rights Reserved.

EV7740DN-01B BILL OF MATERIALS

Qty	Ref	Value	Description	Package	Manufacturer	Manufacturer P/N
1	C1	2200uF	Electrolytic Capacitor, 50V	Radial	Rubycon	
2	C2,C3	2.2uF	Electrolytic Capacitor, 50V	Radial	Rubycon	
2	C4,C5	10uF	Electrolytic Capacitor, 50V	Radial	Rubycon	
1	C6	5.6nF	Ceramic Capacitor, 50V, X7R	0603	muRata	GRM188R71H562KA01
1	C7	4.7nF	Ceramic Capacitor, 50V,X7R	0603	muRata	GRM188R71H472KA01
2	C8,C9	NS	Not Stuffed			
2	C10,C11	22pF	Ceramic Capacitor, 50V,C0G	0603	muRata	GRM1885C1H220JA01D
2	C12, C13	0.47uF	Ceramic Capacitor, 16V,X7R	0603	muRata	GRM188R71C474KA88D
2	C14,C15	2.2uF	Ceramic Capacitor, 50V,X7R	1206	muRata	GRM31CR71H225KA88L
2	C16, C17	390pF	Ceramic Capacitor, 50V,C0G	0603	muRata	GRM1885C1H3901JA01
2	C18, C19	0.47uF	FILM,50V	Radial	any	
2	C20,C21	1000uF	Electrolytic Capacitor, 50V	Radial	Rubycon	
4	C22,C23, C24,C25	0.1uF	Ceramic Capacitor, 50V,X7R	0603	muRata	GRM188R71H104KA93D
2	D1, D2,	Optional	Diode Schottky, 40V, 3A	SMA	Diodes	B340LA
2	D3, D4	NS	Not Stuffed			
2	FB1, FB2		Ferrite Bead, 6A	1206	LION	PB321611-320
1	SW1		DPDT Slide Switch			
2	CN2,CN3		Phono Jack, Female			
1	CN1		Banana Jack Connector			
1	TP1		Test Point/EXT.EN			
1	SP1		Speaker Connector			
2	L1, L2	10uH	Inductor, 3.61A	Radial	Toko	10RHBP-#A671HN-100L
2	R1,R2	NS	Not Stuffed			
4	R3, R4, R19,R20,	10kΩ	Film Resistor, 1%	0603	Yageo	RC0603FR-0710KL
5	R5,R6, R7,R8, R9	100kΩ	Film Resistor, 1%	0603	Yageo	RC0603FR-07100KL
2	R10,R18	30.1kΩ	Film Resistor, 1%	0603	Yageo	RC0603FR-0730K1L
2	R11, R12	82.5kΩ	Film Resistor, 1%	0603	Yageo	RC0603FR-0782K5L
1	R13	200kΩ	Film Resistor, 5%	0603	Yageo	RC0603JR-07200KL
4	R14, R15, R16, R17	10Ω	Film Resistor, 1%	0603	Yageo	RC0603FR-0710RL
2	R21,R22	10kΩ	Film Resistor, 5%	0603	Yageo	RC0603FR-0711RL
2	U1,U2		Class D Audio Amplifier	SOIC8E	MPS	MP7740DN

MPS Proprietary Information. Unauthorized Photocopy and Duplication Prohibited.
© 2011 MPS. All Rights Reserved.

PRINTED CIRCUIT BOARD LAYOUT

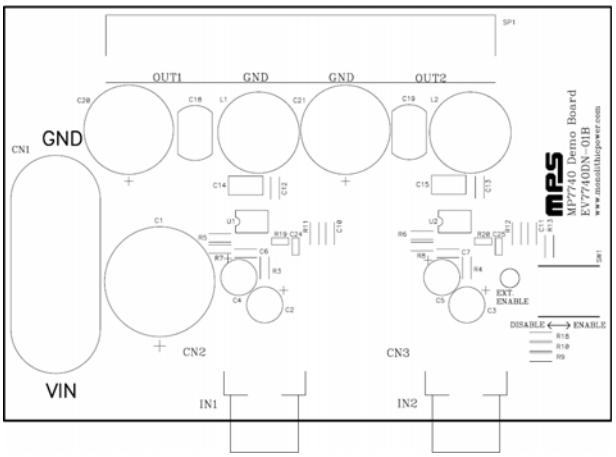

Figure 1—Top Silk Layer

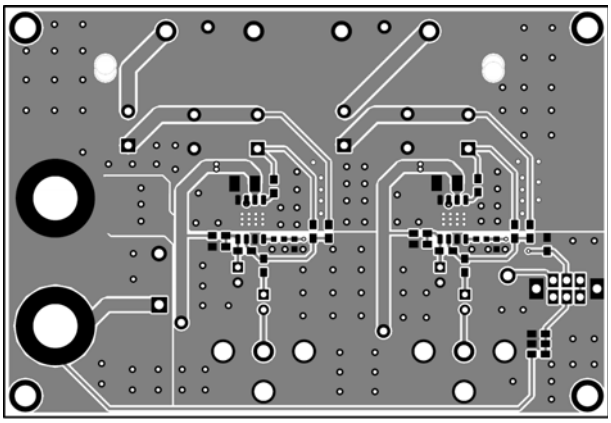

Figure 2—Top Layer

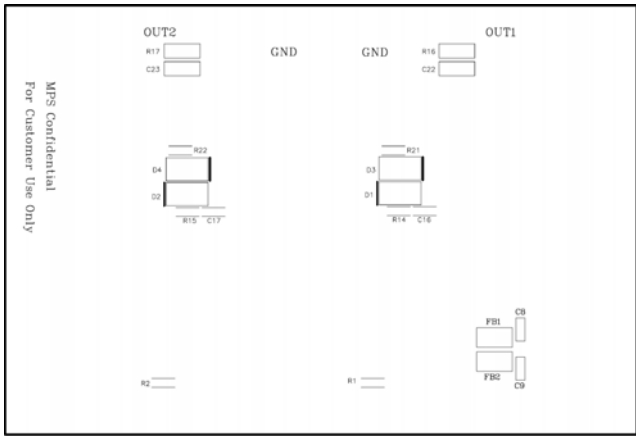

Figure 3—Bottom Silk Layer

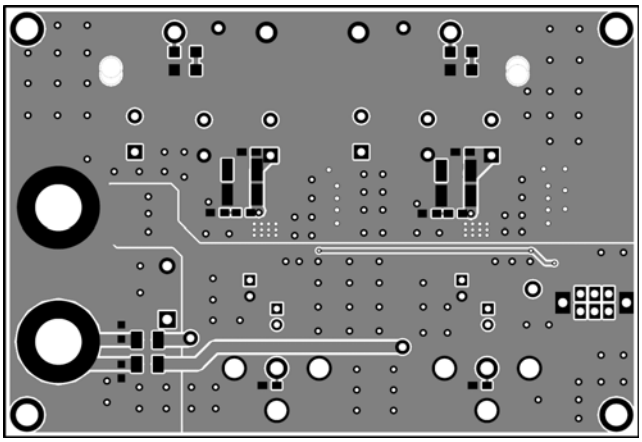

Figure 4—Bottom Layer

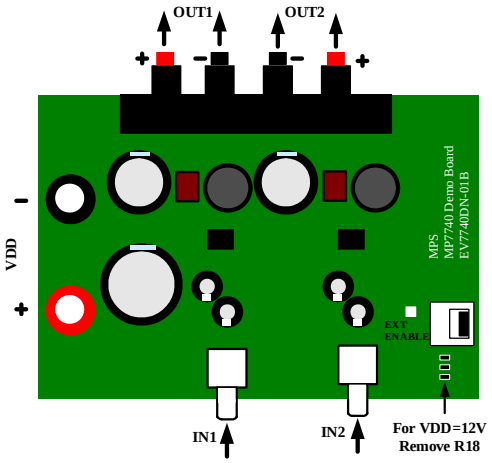

Figure 5—EV7740DN-01B Connection Diagram

MPS Proprietary Information. Unauthorized Photocopy and Duplication Prohibited.
© 2011 MPS. All Rights Reserved.

QUICK START GUIDE

1. This board set up from the factory for 24V operation. To use with 36V power supply, adjust the components as specified in the 36V Operation Modifications section below. To use with 12V power supply, adjust the components as specified in the 12V Operation Modifications section below. For more information, consult the MP7740 datasheet.
2. Power Requirements
    a. Power supply: 9.5V to 36V, 3A maximum.
    b. 0V to 1.5V_{RMS} (max) audio signal source.
    c. Speaker: 4Ω to 8Ω (for 12 V and 24V operation). 6Ω to 8Ω (for 36V operation)
3. Setup Condition for 24V Operation
    a. Adjust the power supply to 24V (do not turn on).
    b. Connect the outputs to the external speakers.
    c. Connect the power supply to the V_{DD} terminals.
    d. Set the enable switch to the DISABLE position.
    e. Connect the audio input signal source to the amplifier inputs (IN1, IN2).
    f. Turn on the power supply to apply power to the board.
4. 36V Operation Modifications
    a. Change C6 to 8.2nF and C7 to 6.8nF components.
    b. Adjust the power supply to 36V (do not turn on).
    c. Select 6Ω to 8Ω speaker.
    d. Do as step b~f specified in Section 3.
5. 12V Operation Modifications
    a. Change C6 to 3.3nF and C7 to 2.2nF components.
    b. Remove R18 from the demo board.
    c. Adjust the power supply to 12V (do not turn on).
    d. Do as step b~f specified in Section 3.
6. Music Turn-On Sequence
    Set the enable switch to the ENABLE position.
7. Music Turn-Off Sequence
    a. Set the enable switch to the DISABLE position.
    b. Turn off power supply.

NOTICE: The information in this document is subject to change without notice. Please contact MPS for current specifications. Users should warrant and guarantee that third party Intellectual Property rights are not infringed upon when integrating MPS products into any application. MPS will not assume any legal responsibility for any said applications.

MPS Proprietary Information. Unauthorized Photocopy and Duplication Prohibited.
© 2011 MPS. All Rights Reserved.