EV3399EF-00A

24 strings White LED Driver Evaluation Board

The Future of Analog IC Technology

DESCRIPTION

The EV3399EF-00A is an evaluation board for the MP3399EF, a 12 LED channels step-up converter designed for large liquid-crystal displays that employ an array of LEDs as the light source. The board builds with two MP3399EF in parallel to drive 24 strings LEDs with 60mA maximum current.

The MP3399 uses external power mosfet and internal current mode, fixed frequency architecture and includes current ballast in each string terminal, which achieves 2.5% current regulation accuracy between strings. Low feedback voltage at each LED string help reduce power loss and improve efficiency.

The MP3399 has multiple features to protect the converter from fault conditions, including under-voltage lockout, current limiting, over voltage, short LED, open LED and thermal shut-down protection.

FEATURES

- 8V to 28V Input Voltage Range
- External Power MOSFET
- Up to 90% Efficiency
- Programmable Over Voltage Protection
- Drives up to 24 Strings Parallel 2.5% Current Regulation Accuracy Between Strings
- Programmable Switching Frequency:
- PWM Dimming
- Open and Short LED Load Protection
- Thermal Shutdown

APPLICATIONS

- Notebook PC
- LCD Monitor
- LCD TV
- Handy Terminals Display
- Automotive Systems and Tablet Computer

"MPS" and "The Future of Analog IC Technology" are Registered Trademarks of Monolithic Power Systems, Inc.

ELECTRICAL SPECIFICATIONS

Parameter	Symbol	Value	Units
Input Voltage	V_{IN}	8 – 28	V
LEDs #		24 strings parallel &12 LEDs/string	
LED Current	I_{LED}	20/string	mA

EV3399EF-00A EVALUATION BOARD

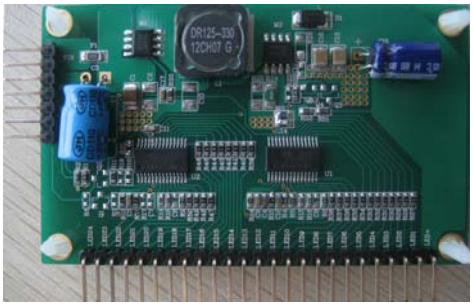

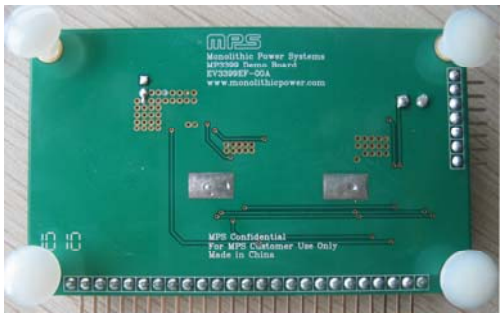

(L x W x H) 7.8cm x 4.7cm x 1.0cm

Board Number	MPS IC Number
EV3399EF-00A	MP3399EF

MPS Proprietary Information. Unauthorized Photocopy and Duplication Prohibited.
© 2011 MPS. All Rights Reserved.

EVALUATION BOARD SCHEMATIC

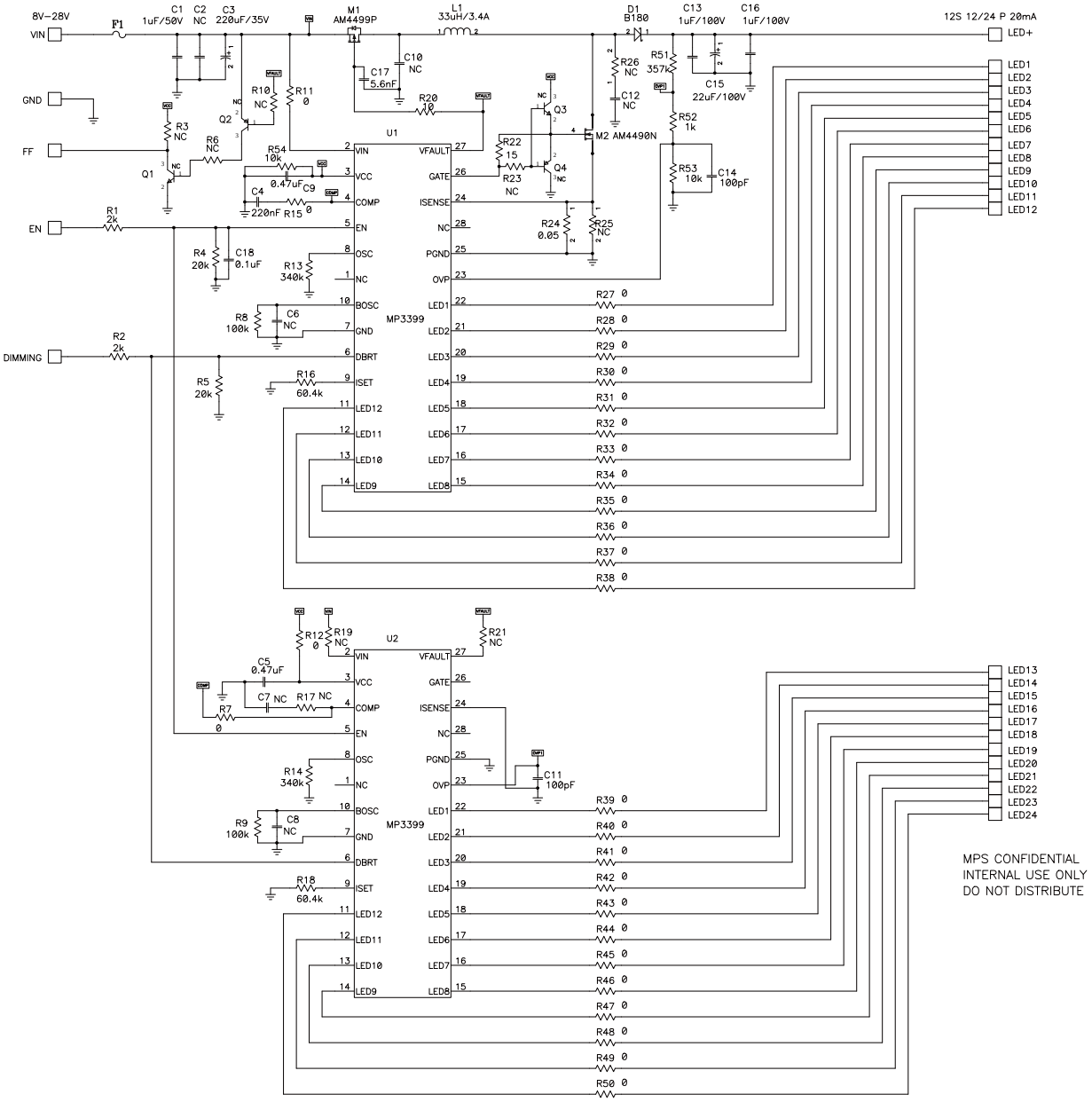

MPS Proprietary Information. Unauthorized Photocopy and Duplication Prohibited.
© 2011 MPS. All Rights Reserved.

EV3399EF-00A BILL OF MATERIALS

Qty	RefDes	Value	Description	Package	Reference	Manufacturer P/N
1	C1	1μF	Ceramic Capacitor, 50V, X7R	1210	TAIYO YUDEN	UMK325BJ105KH-T
3	C2,C10,C12	NC		1210		
1	C3	220μF	Electrolytic Capacitor, 35V			
1	C4	220nF	Ceramic Capacitor, 50V, X7R	0603	Murata	GRM188R71H224KA93D
2	C5,C9	0.47μF	Ceramic Capacitor, 25V, X7R	0603	Murata	GRM1885C1E474JA01D
3	C6,C7,C8	NC		0603		GRM1885C1H101JA01D
2	C11,C14	100pF	Ceramic Capacitor, 50V, COG	0603	Murata	GRM1885C1H474JA01D
1	C15	22μF	Electrolytic Capacitor, 100V			
2	C13,C16	1μF	Ceramic Capacitor, 100V, X7R	1210	Murata	GRM32ER71H105KA88L
1	C17	5.6nF	Ceramic Capacitor, 50V, X7R	0603	Murata	GRM188R71H562KA01
1	C18	0.1μF	Ceramic Capacitor, 50V, X7R	0603	Murata	GRM188R71H105KA93D
1	D1		Diode Schottky, 80V, 1A	SMA	Diodes Inc	B180
1	F1	0Ω	Fuse, 2A, 63V	1206		
1	L1	33μH	Inductor,3.84A	SMD	Cooper	DR125-330-R
1	M1		P- channel MOSFET	SO8		AM4499P
1	M2		N- channel MOSFET	SO8		AM4490N
2	Q1,Q3	NC	NPN, Transistor	SOT323		
2	Q2,Q4	NC	PNP, Transistor	SOT323		
2	R1,R2,	2kΩ	Resistor, 1%	0603	Yageo	RC0603FR-072KL
2	R4,R5	20kΩ	Resistor, 1%	0603	Yageo	RC0603FR-0720KL
8	R3,R6,R10, R17,R19, R21,R23,R26	NC		0603		
2	R8,R9	100kΩ	Resistor, 1%	0603	Yageo	RC0603FR-07100KL
28	R7,R11, R12,R15, R27-50	0Ω	Resistor, 1%	0603	Yageo	
2	R13,R14	340kΩ	Resistor, 1%	0603	Yageo	RC0603FR-07340KL
2	R16,R18	60.4kΩ	Resistor, 1%	0603	Yageo	RC0603FR-0760K4L
1	R20	10Ω	Resistor, 1%	0603	Yageo	RC0603FR-0710L
1	R22	15Ω	Resistor, 1%	0603	Yageo	RC0603FR-0715L
1	R24	0.05Ω	Sensign resistor. 1%	1206	CYNTEC	RL1632H-R050-FN
1	R25	NC				
1	R51	357kΩ	Resistor, 1%	0603	Yageo	RC0603FR-07357KL
1	R52	1kΩ	Resistor, 1%	0603	Yageo	RC0603FR-071KL
2	R53,R54	10kΩ	Resistor, 1%	0603	Yageo	RC0603FR-0710KL
2	U1,U2		LED Driver IC	TSSOP28	MPS	MP3399EF R2

MPS Proprietary Information. Unauthorized Photocopy and Duplication Prohibited.
© 2011 MPS. All Rights Reserved.

PRINTED CIRCUIT BOARD LAYOUT

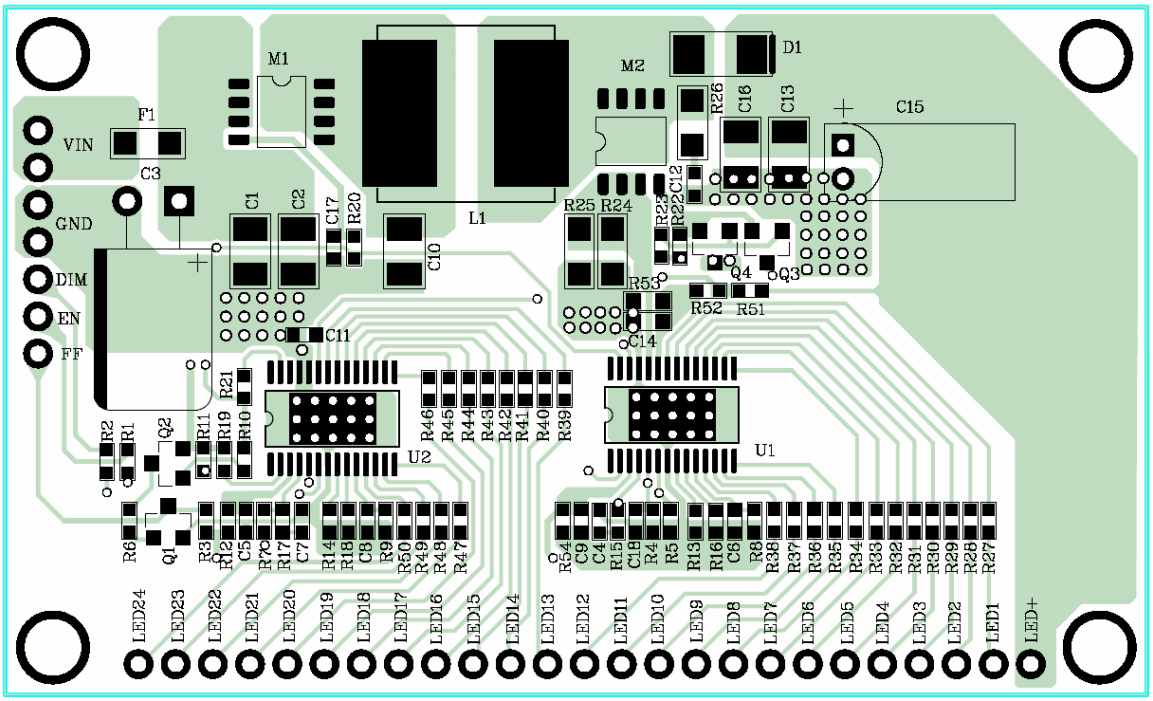

Figure 1—Top Layer

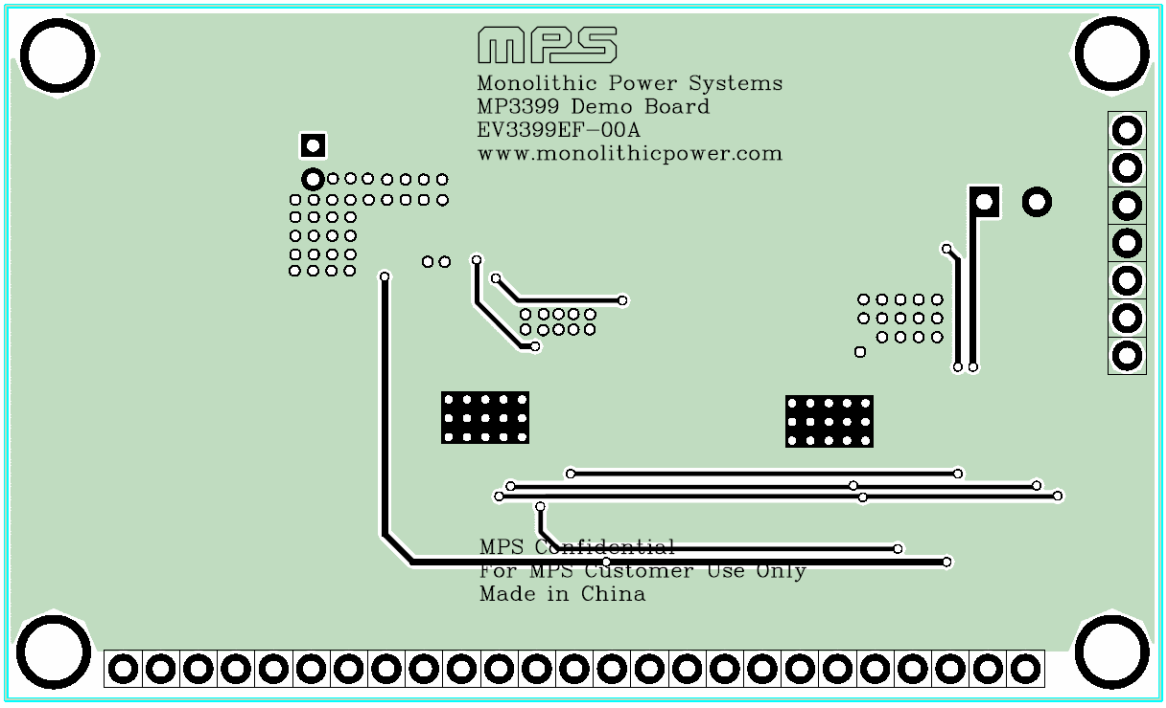

Figure 2—Bottom Layer

MPS Proprietary Information. Unauthorized Photocopy and Duplication Prohibited.
© 2011 MPS. All Rights Reserved.

QUICK START GUIDE

1. Connect the positive and negative terminals of the load panel (12 white LEDs in series, 24 stings paralleled) to the LED+ and LED1~24 pins on the EV board, respectively.
2. Connect the positive and negative terminals of the power supply (8V ~ 28V) to the VIN and GND pins on the EV board, respectively.
3. Apply the PWM dimming signal on the DBRT to achieve the dimming request, the frequency of the PWM signal is recommended between 200Hz to 2kHz.
4. Drive EN pin high (5V) to enable the MP3399. The LED should be lighted.

NOTICE: The information in this document is subject to change without notice. Users should warrant and guarantee that third party Intellectual Property rights are not infringed upon when integrating MPS products into any application. MPS will not assume any legal responsibility for any said applications.

MPS Proprietary Information. Unauthorized Photocopy and Duplication Prohibited.
© 2011 MPS. All Rights Reserved.