EV28115DQ-00B

4A, 6V, Synchronous Step-Down Switching Regulator EV Board

The Future of Analog IC Technology

DESCRIPTION

The EV28115DQ-00B is an evaluation board for the MP28115. The MP28115 delivers 4A continuous load current over an operating input voltage 2.7V to 6.0V. The output is adjustable over a range of 0.8V to 0.9xV_{IN} by means of an external resistor from FB pin to ground.

The current mode control used in MP28115 provides fast transient response and cycle-by-cycle current limiting. The EV board will go into hiccup mode to protect against over current/short circuit.

This EV board can be turned on or shut down via a remote ON/OFF input that is referenced to ground. This input is compatible with popular logic devices.

This EV board also has power good indicator. The output of POK is pulled to ground when output voltage is under or over 10% of its setting voltage.

FEATURES

- 4A Output Current
- 2.7V to 6.0V Operating Input Range
- Built-in Soft Start
- Adjustable Output from 0.8V to 0.9xV_{IN}
- Fully Assembled and Tested

APPLICATIONS

- µP/ASIC/DSP/FPGA Core and I/O Supplies
- Printers and LCD TVs
- Network and Telecom Equipment
- Point of Load Regulators

"MPS" and "The Future of Analog IC Technology" are Registered Trademarks of Monolithic Power Systems, Inc.

ELECTRICAL SPECIFICATIONS

Parameter	Symbol	Value	Units
Input Voltage	V_{IN}	2.7 – 6.0	V
Output Voltage	V_{OUT}	1.8	V
Output Current	I_{OUT}	4	A

EV28115DQ–00B EVALUATION BOARD



(L x W x H) 2.4" x 2.0" x 0.5"
(6.1cm x 5.1cm x 1.4 cm)

Board Number	MPS IC Number
EV28115DQ-00B	MP28115DQ

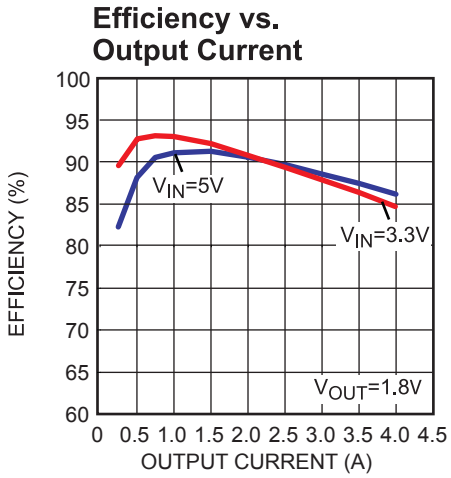

MPS Proprietary Information. Unauthorized Photocopy and Duplication Prohibited.
© 2009 MPS. All Rights Reserved.

EVALUATION BOARD SCHEMATIC

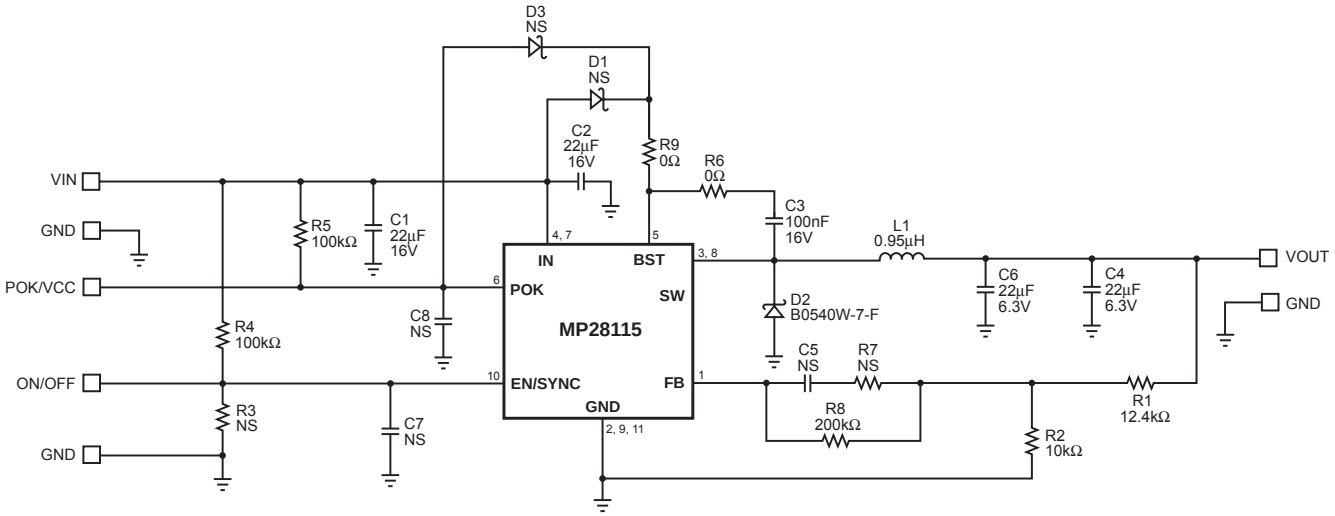

EV28115DQ–00B BILL OF MATERIALS

Qty	Ref	Value	Description	Package	Manufacturer	Manufacturer P/N
2	C1, C2	22µF	Ceramic Cap., 16V, X7R	1210	Murata	GRM32ER71C226K
1	C3	100nF	Ceramic Cap., 16V, X7R	0603	Murata	GRM188R71C104K
2	C4, C6	22µF	Ceramic Cap., 6.3V, X7R	1210	Murata	GRM32ER70J226K
3	C5, C7, C8	NS	Not Stuffed			
1	R1	12.4kΩ	Film Resistor, 1%	0603	Yageo	RC0603FR-0712K4L
1	R2	10 kΩ	Film Resistor, 1%	0603	Yageo	RC0603FR-0710K0L
2	R3, R7	NS	Not Stuffed			
2	R4, R5	100 kΩ	Film Resistor, 5%	0603	Yageo	RC0603FR-07100KL
2	R6, R9	0Ω	Film Resistor, 5%	0603	Yageo	RC0603JR-0700R0L
1	R8	200 kΩ	Film Resistor, 5%	0603	Yageo	RC0603JR-07200KL
2	D1, D3	NS	Not Stuffed			
1	D2	0.5A, 40V	Schottky Diode	SOD-123	Diodes Inc	B0540W-7-F
1	L1	0.95µH	Inductor, DCR=7.4mΩ	SMD	Wurth Electronics	744310095
1	U1		Step-Down Regulator	QFN10	MPS	MP28115DQ

MPS Proprietary Information. Unauthorized Photocopy and Duplication Prohibited.
© 2009 MPS. All Rights Reserved.

PRINTED CIRCUIT BOARD LAYOUT

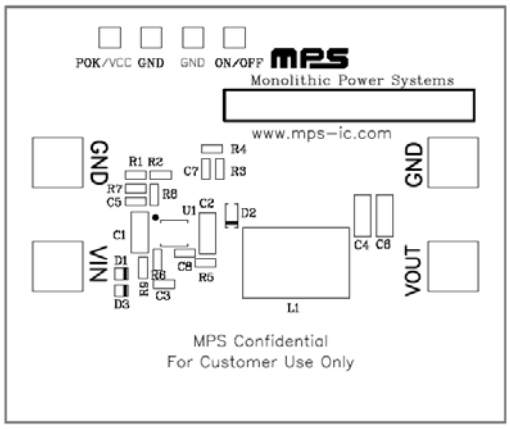

Figure 1—Top Silk Layer

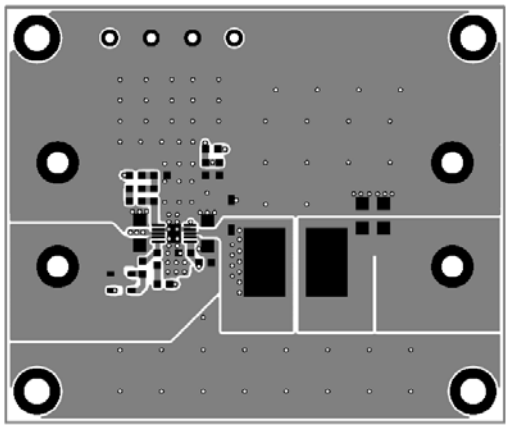

Figure 2—Top Layer

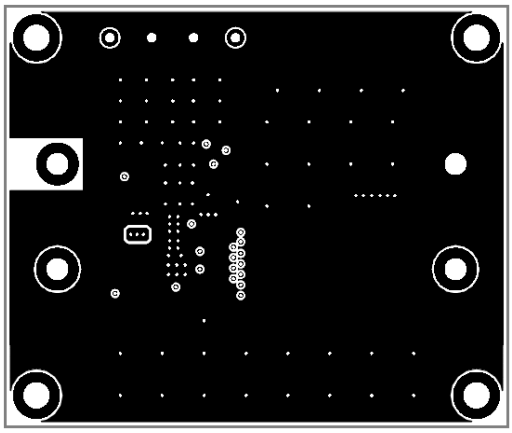

Figure 3—Inner Layer 1

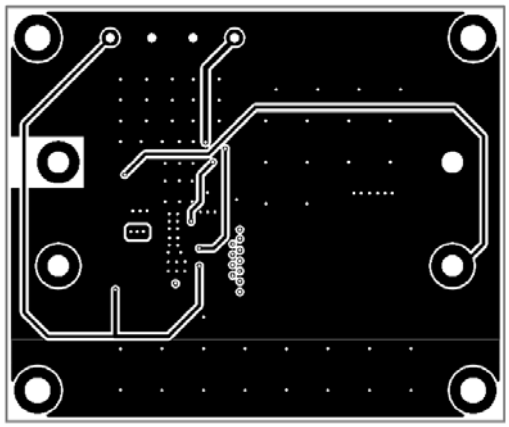

Figure 4—Inner Layer 2

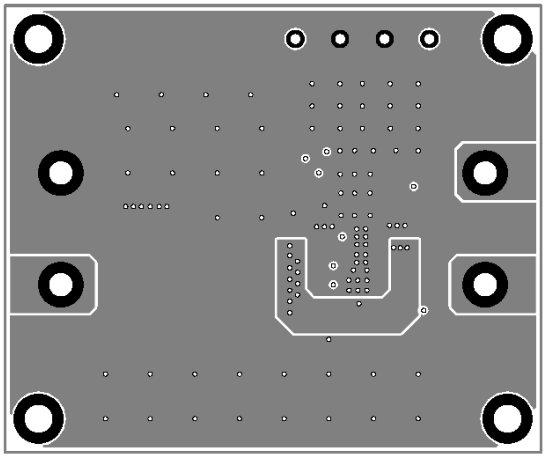

Figure 5—Bottom Layer

MPS Proprietary Information. Unauthorized Photocopy and Duplication Prohibited.
© 2009 MPS. All Rights Reserved.

QUICK START GUIDE

1. Connect the positive and negative terminals of the load to the VOUT and GND pins, respectively.
2. Preset the power supply output to 3.3V-6.0V, then turn it off.
3. Connect the positive and negative terminals of the power supply output to the VIN and GND pins, respectively.
4. Turn the power supply on. The EV28115DQ board will automatically startup.
5. To use the Enable function, apply a digital input to the EN pin. Drive EN higher than 1.6V to turn on the regulator, drive EN less than 0.4V to turn it off.
6. Use R1 and R2 to set the output voltage with V_{FB} = 0.8V. Follow the Application Information section in the device datasheet to select the proper value of R1, R2, inductor and output capacitor values when output voltage is changed.

NOTICE: The information in this document is subject to change without notice. Users should warrant and guarantee that third party Intellectual Property rights are not infringed upon when integrating MPS products into any application. MPS will not assume any legal responsibility for any said applications.

MPS Proprietary Information. Unauthorized Photocopy and Duplication Prohibited.
© 2009 MPS. All Rights Reserved.