EV0022 (MP1522)

Precision 6 White LED Driver Evaluation Board

The Future of Analog IC Technology

DESCRIPTION

The EV0022 evaluation board uses the MP1522 to drive up to six (6) series white LEDs from a single cell Lithium Ion battery. The MP1522 uses a current limited, variable frequency architecture to regulate the LED current, which is measured through an external current sense resistor. Its 1.23V, 3% feedback threshold improves the LED current regulation. The BIAS pin can measure the output voltage and turn off the converter to prevent damage in an open circuit condition.

The MP1522 includes under-voltage lockout, current limiting and thermal overload protection preventing damage in the event of an output overload. The MP1522 is available in tiny 5-pin SOT23 packages.

ELECTRICAL SPECIFICATION

Parameter	Symbol	Value	Units
Input Voltage	V_{CC}	3.0 – 5.5	V
LED Current		20	mA

FEATURES

- Internal 0.5Ω Power Switch
- Output Voltage up to 25V
- Up to 90% Efficiency
- Low 1μA Shutdown Current
- Input Under-Voltage Protection
- Thermal Shutdown
- Internal Current Limit

APPLICATIONS

- Handheld Computers, PDAs
- Cell Phones
- Digital Still and Video Cameras
- Small LCD Displays

"MPS" and "The Future of Analog IC Technology" are Registered Trademarks of Monolithic Power Systems, Inc.

EV0022 EVALUATION BOARD



Dimensions (2.2"X x 1.5"Y x 0.5"Z)

Board Number	MPS IC Number
EV0022	MP1522DT

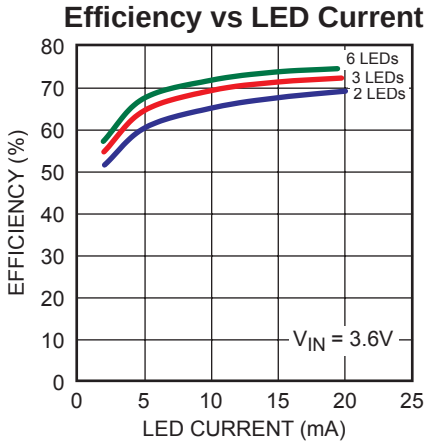

MPS Proprietary Information. Unauthorized Photocopy and Duplication Prohibited.
© 2006 MPS. All Rights Reserved.

EVALUATION BOARD SCHEMATIC

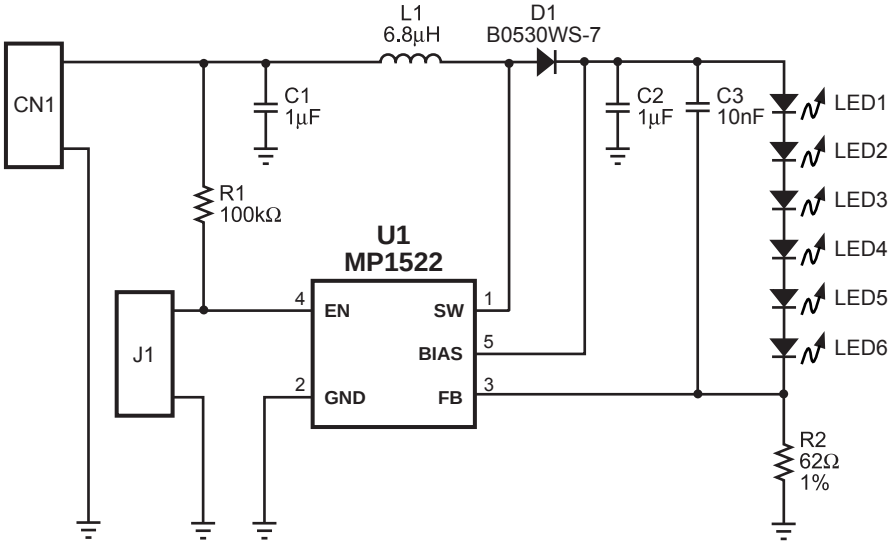

EV0022 BILL OF MATERIALS

Qty	Ref	Description	Package
1	U1	MP1522	SOT23-5
1	L1	Inductor, 6.8µH	D31FB
1	C1, C2	Ceramic Capacitor, 1µF, 50V, X5R or X7R	0805
1	C3	Ceramic Capacitor, 10nF, 50V, X5R or X7R	0603
1	R1	Resistor, 100kΩ, 5%	0603
1	R2	Resistor, 62Ω, 1%	0603
1	D1	Schottky Diode, 0.5A, 30V	B0530W
6	LED1 – LED6	Not Included with Board	

MPS Proprietary Information. Unauthorized Photocopy and Duplication Prohibited.
© 2006 MPS. All Rights Reserved.

PRINTED CIRCUIT BOARD LAYOUT

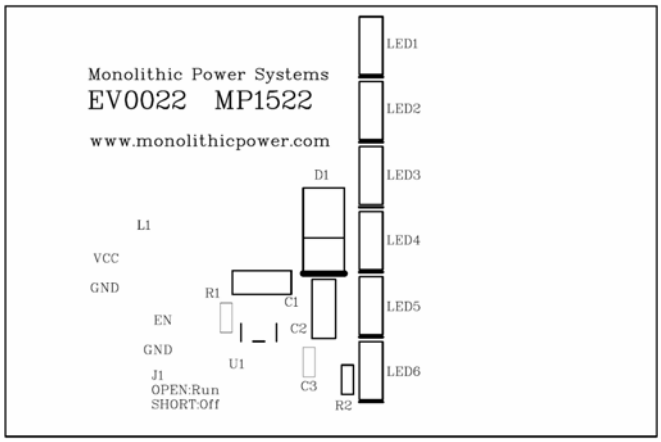

Figure 1—Top Silk Layer

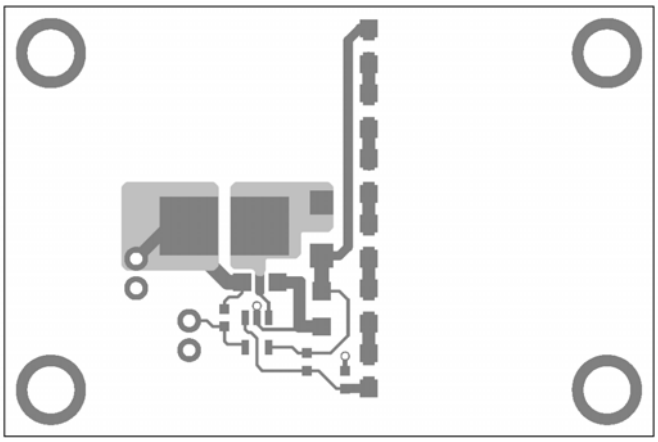

Figure 2—Top Layer

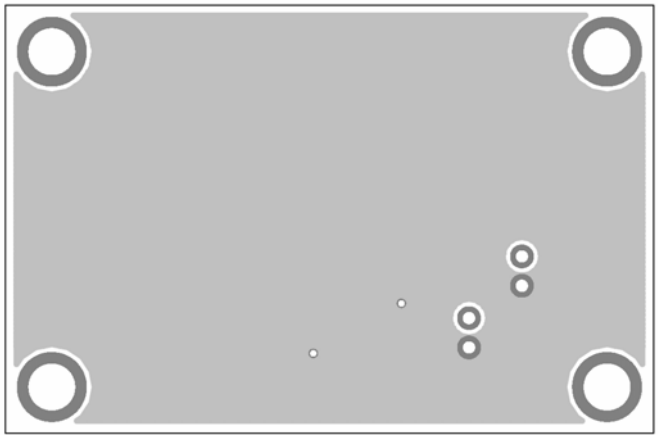

Figure 3—Bottom Layer

MPS Proprietary Information. Unauthorized Photocopy and Duplication Prohibited.
© 2006 MPS. All Rights Reserved.

QUICK START GUIDE

1. Connect LEDs to LED1 – LED6 terminals.
2. Preset Power Supply to $3V \leq V_{CC} \leq 5.5V$.
3. Turn Power Supply off.
4. Connect Power Supply terminals to:
    a. Positive (+): VCC
    b. Negative (–): GND
5. Turn Power Supply on after making connections.
6. Remove the jumper J1 to allow the MP1522 to automatically start when power is applied. Place the shorting clip across J1 to disable the MP1522. A logic signal may be applied to EN to enable/disable the MP1522, provided the shorting clip is not installed across J1.
7. To dim the LEDs remove the shorting clip from J1 and apply a PWM signal to the EN pin. The duty cycle of the PWM signal determines the LED current.

NOTICE: The information in this document is subject to change without notice. Users should warrant and guarantee that third party Intellectual Property rights are not infringed upon when integrating MPS products into any application. MPS will not assume any legal responsibility for any said applications.

MPS Proprietary Information. Unauthorized Photocopy and Duplication Prohibited.
© 2006 MPS. All Rights Reserved.