EV-RADAR-MMIC2 User Guide
UG-866

One Technology Way • P.O. Box 9106 • Norwood, MA 02062-9106, U.S.A. • Tel: 781.329.4700 • Fax: 781.461.3113 • www.analog.com

Evaluation Board for the ADF5901, ADF5904, and ADF4159 Chipset for a 24 GHz FMCW Radar

FEATURES

Evaluates the chipset containing the ADF5901 24 GHz Tx MMIC, the ADF5904 24 GHz Rx MMIC, and the ADF4159 13 GHz PLL
Accompanying software controls all functions from a PC

EVALUATION KIT CONTENTS

EV-RADAR-MMIC2 evaluation board
EV-ADAR-D2S evaluation board

ADDITIONAL EQUIPMENT

PC running Windows XP or a more recent software version
SDP-S or SDP-B board
Spectrum analyzer
Oscilloscope
5 V power supply
±9 V power supply

DOCUMENTS NEEDED

ADF5901 data sheet
ADF5904 data sheet
ADF4159 data sheet

REQUIRED SOFTWARE

Analog Devices, Inc., EV-RADAR-MMIC

GENERAL DESCRIPTION

The EV-RADAR-MMIC2 evaluation board is designed to evaluate the performance of the ADF5901, a 24 GHz transmitter (Tx) monolithic microwave integrated circuit (MMIC); the ADF5904, a 24 GHz receiver (Rx) MMIC; and the ADF4159, a 13 GHz phase-locked loop (PLL) for a frequency modulated continuous wave (FMCW) radar system. Figure 1 shows the evaluation board, which evaluates the ADF5901, ADF5904, and ADF4159 chipset, six high frequency K type connectors for the two Tx outputs and four Rx inputs, banana connectors for the power supply, and a connector for a system demonstration platform (SDP) serial interface.

The EV-ADAR-D2S adapter board contains the eight AD8129 differential receiver amplifiers that convert the baseband ADF5904 differential signals to single-ended signals with a 20 dB gain.

The evaluation kit also contains the Analog Devices EV-RADAR-MMIC Software, which is compatible with Windows® XP and later Windows versions to allow easy programming of the device.

The EV-RADAR-MMIC2 evaluation board requires an SDP-S or SDP-B board (not supplied with the kit). The SDP board allows software programming of all the devices.

Full specifications for the ADF5901, ADF5904, and ADF4159 are listed in the ADF5901 data sheet, the ADF5904 data sheet, and the ADF4159 data sheet available from Analog Devices and should be consulted in conjunction with this user guide when using the evaluation board.

PLEASE SEE THE LAST PAGE FOR AN IMPORTANT WARNING AND LEGAL TERMS AND CONDITIONS.

TABLE OF CONTENTS

Features ... 1
Evaluation Kit Contents ... 1
Additional Equipment ... 1
Documents Needed ... 1
Required Software ... 1
General Description ... 1
Revision History ... 2
EV-RADAR-MMIC2 Evaluation Board ... 3
Quick Start Guide ... 4
Evaluation Board Hardware ... 5
  Power Supplies ... 5
  Input Signals ... 5
  Radio Frequency (RF) Input Signals ... 5
  RF Output Signals ... 5
  Channel Mapping ... 5
  Default Operation ... 5
Evaluation Board Software ... 6
  ADF5904 Controls ... 7
  ADF5901 Controls ... 8
  ADF4159 Controls ... 9
Evaluation and Test Procedures ... 11
Evaluation Board Schematics and Artwork ... 15
Ordering Information ... 27
  Bill of Materials ... 27
  Related Links ... 28

REVISION HISTORY

4/2017—Rev. A to Rev. B

Updated EV-RADAR-MMIC2 Link, EV-RADAR-MMIC Link, and EV-ADAR-D2S Link ... Throughout

2/2017—Rev. 0 to Rev. A

Changes to General Description Section ... 1
Added Figure 24; Renumbered Sequentially and Figure 25 ... 21
Added Figure 26 and Figure 27 ... 22
Added Figure 28 ... 23
Added Figure 31 ... 26
Change to Table 2 ... 27
Added Table 3 ... 28

12/2015—Revision 0: Initial Version

EV-RADAR-MMIC2 EVALUATION BOARD

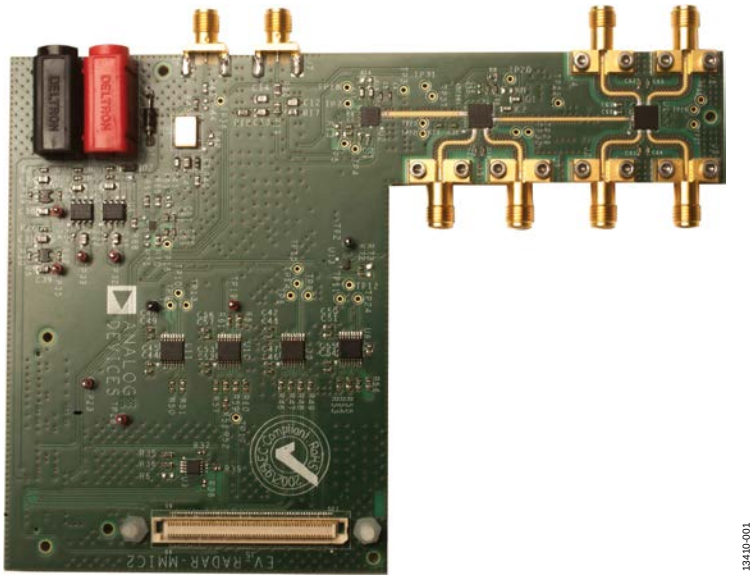

Figure 1.

QUICK START GUIDE

Follow these steps to evaluate the ADF5901, ADF5904, and ADF4159 devices:

1. Connect the power supply to the EV-RADAR-MMIC2.
   a. Supply 5 V to the VSUPPLY (P3) banana connector.
   b. Connect GND to the GND (P2) banana connector.
2. Connect the power supplies to the EV-ADAR-D2S.
   a. Supply 9 V to the VPOS SMA connector.
   b. Supply −9 V to the VNEG SMA connector.
3. Connect the EV-ADAR-D2S board to the EV-RADAR-MMIC2 evaluation board.
4. Install the EV-RADAR-MMIC software.
5. Connect the SDP motherboard to the PC and to the EV-RADAR-MMIC2.
6. Follow the hardware driver installation procedure that displays after the SDP motherboard connects to the PC.
7. Connect an antenna or a delay cable to the Tx (J9) and Rx (J6) connectors (see Figure 8 and Figure 9).
8. Run the EV-RADAR-MMIC software.
9. Select the EV-RADAR-MMIC2 (the ADF5901, ADF5904, and ADF4159 devices) and the SDP board in the **Select Device and Connection** tab.
10. Check that SDP board connected appears on the status bar.
11. Click the **ADF5904 Controls** tab and then click **Initialize**.
12. Click the **ADF4159 Controls** tab and then click **Write All Registers**.
13. Click the **ADF5901 Controls** tab and then click **Initialize ADF5901**.
14. Click the **Ramps and Shift Keying** tab under the **ADF4159 Controls** tab to enable the ramp and then click **Write R0**.
15. Measure the output baseband signals on the EV-ADAR-D2S board.

EVALUATION BOARD HARDWARE

The EV-RADAR-MMIC2 evaluation board requires an SDP-S or SDP-B motherboard to program the device. These SDP boards are not included with the evaluation board and must be purchased separately.

POWER SUPPLIES

The EV-RADAR-MMIC2 evaluation board is powered via one external supply of 5 V connected to VSUPPLY as described in the Quick Start Guide section.

The EV-ADAR-D2S board is powered via two external supplies: +9 V connected to VPOS and −9 V connected to VNEG, as described in the Quick Start Guide section.

INPUT SIGNALS

The on-board, 100 MHz temperature compensated crystal oscillator (TCXO) provides the necessary reference signal. Use an external REF_{IN} signal, if desired.

RADIO FREQUENCY (RF) INPUT SIGNALS

The RF input pins on the ADF5904 contain a dc bias voltage and must be ac-coupled to the EV-RADAR-MMIC2 evaluation board. The RF inputs are on the J2 (RX1_RFIN), J3 (RX2_RFIN), J4 (RX3_RFIN), and J6 (RX4_RFIN) SMA connectors.

RF OUTPUT SIGNALS

The Tx outputs from the ADF5901 contain a dc bias voltage and must be ac-coupled. The Tx outputs are available on the J8 (TX_OUT1) and J9 (TX_OUT2) output SMA connectors.

CHANNEL MAPPING

Table 1 shows the pin mapping from the ADF5904 RXx_xx to baseband outputs on the EV-ADAR-D2S evaluation board.

Table 1. Pin Mapping

EV-RADAR-MMIC2 Connector	ADF5904 Input	EV-ADAR-D2S Connector
J2	RX1_RFIN	O7
J3	RX2_RFIN	O8
J4	RX3_RFIN	O6
J6	RX4_RFIN	O5

DEFAULT OPERATION

All components necessary for operation are inserted on the board.

EVALUATION BOARD SOFTWARE

The control software for the EV-RADAR-MMIC2 accompanies the EV-RADAR-MMIC2 on a CD. For the software installation procedure, see the UG-476 user guide, *PLL Software Installation Guide*.

To run the software, click the **EV-RADAR-MMIC2** file on the desktop or in the **Start** menu.

On the **Select Device and Connection** tab, select **EV-RADAR-MMIC2 (ADF5901, ADF5904, ADF4159)** and click **Connect.**

Confirm that **SDP connected** displays at the bottom left of the window on the status bar (see Figure 2). Otherwise, the software has no connection to the evaluation board.

Note that, when connecting the evaluation board, it takes about 5 sec to 10 sec for the status label to change.

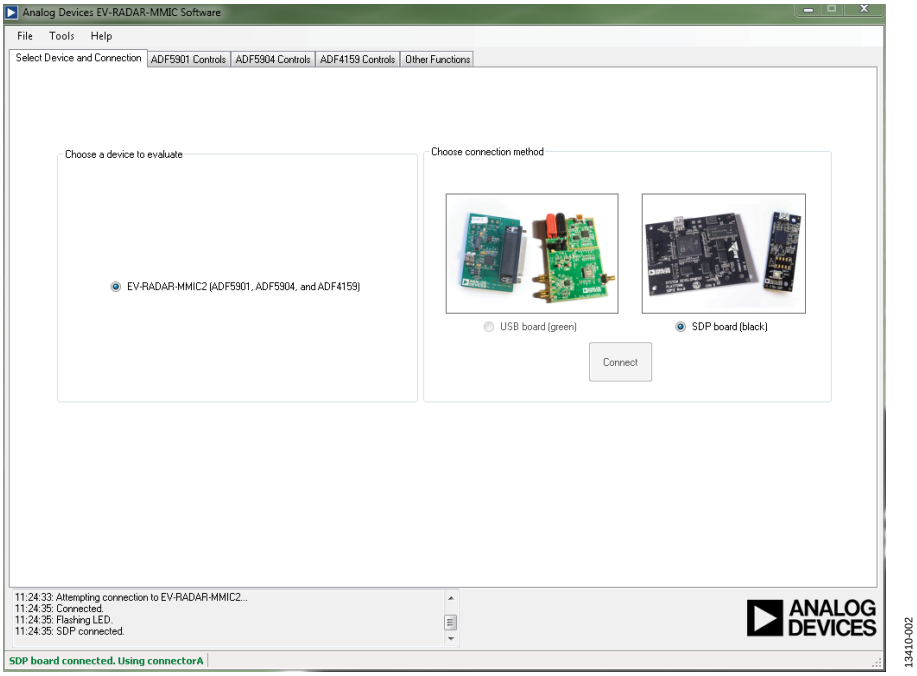

Figure 2. ***Select Device and Connection*** *Tab*

ADF5904 CONTROLS

The **ADF5904 Controls** tab controls the ADF5904 device settings (see Figure 3).

General options are available for the ADF5904 in this section, including power-up and power-down controls and register readback.

When the device initially powers up, click the **Initialize** button to perform the initialization sequence as described in the ADF5904 data sheet.

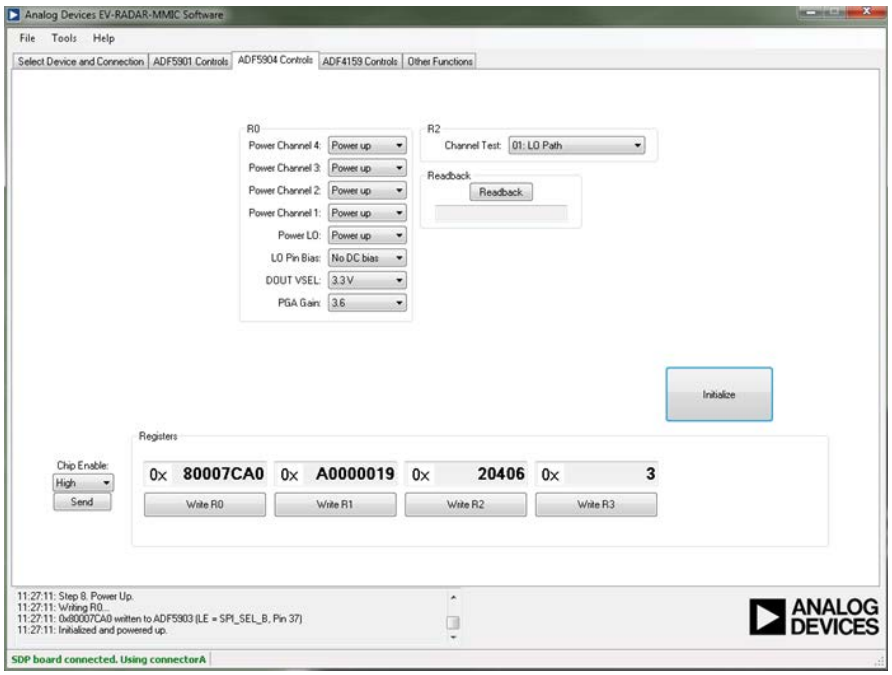

Figure 3. ***ADF5904 Controls***

ADF5901 CONTROLS

The **ADF5901 Controls** tab controls the ADF5901 device settings (see Figure 4).

Use the **RF Settings** pane to control the output frequency. Type the desired output frequency, in MHz, in the **VCO Frequency** field.

To the right of the **RF Settings** pane, general options are available for the registers of the ADF5901, including calibration control and register readback.

When the device initially powers up, click **Initialize ADF5901** to perform the initialization sequence as described in the ADF5901 data sheet.

Following the initialization sequence, the device powers up and all the ADF5901 blocks calibrate.

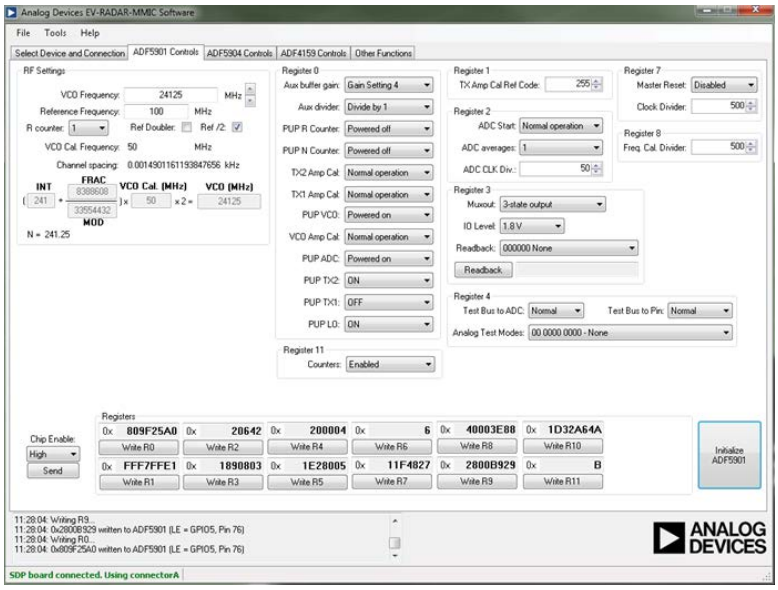

Figure 4. ***ADF5901 Controls***

ADF4159 CONTROLS

The **ADF4159 Controls** tab controls the ADF4159 device settings (see Figure 5).

ADF4159 Main Controls

Use the **Main Controls** tab to select the RF and PLL settings. In the **RF Settings** pane, set the **RF VCO Output Frequency** value to half the ADF5901 VCO output. Set the **Reference Frequency** value to the same frequency as the applied reference signal (TCXO or external signal) as described in the Input Signals section. The phase frequency detector (PFD) frequency is calculated from the reference frequency, the R counter, the reference doubler, and the reference divided by 2. Ensure that the **PFD Frequency** value matches the value specified in the loop filter design.

In the **PLL Settings** section, program the **Charge Pump Setting** to the value designed for the loop.

Program the **Phase Detector Polarity** to negative when using an inverting active loop filter configuration (use a passive loop filter on the EV-RADAR-MMIC).

Select the signal that is connected to the output of the MUXOUT pin from the **Muxout** drop down menu.

The register values are shown at the bottom of the window. When the background of a register value is green, it indicates the value changed and must be written to the device. Clicking the button below each register value writes that value to the device.

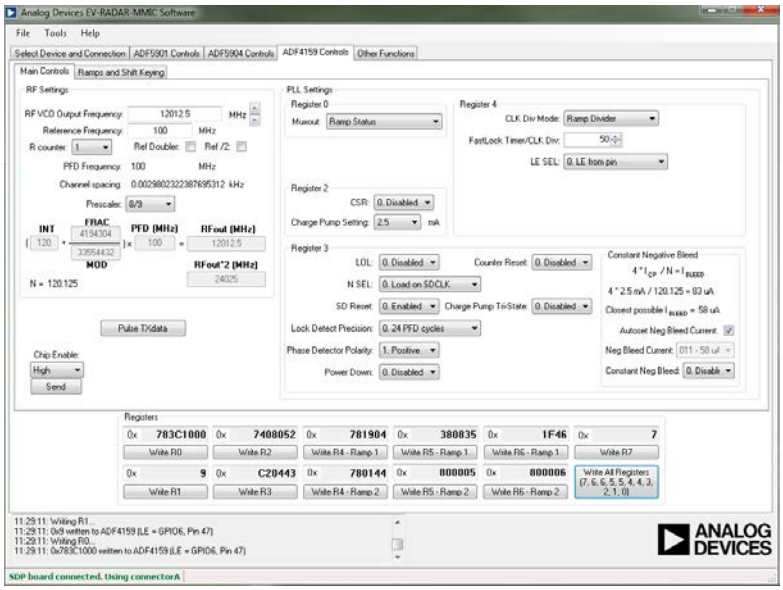

Figure 5. ***Main Controls*** *Tab*

ADF4159 Ramps and Shift Keying

In the **Ramps and Shift Keying** tab, configure the ramping functionality of the ADF4159.

Select the ramp type in the **Ramp mode** drop down menu; the various ramp parameters can be set in the **CLK1** spin box and in the **Up Ramp** pane.

Example of Ramp Setup

Figure 6 shows the ramping settings for a continuous triangular ramp of 1000 up ramp steps over 200 MHz at the ADF5901 Tx output with a ramp time of 5 ms.

For 200 MHz, the PLL is programmed for a 100 MHz ramp because the evaluation board uses the ADF5901 auxiliary output with a 12 GHz output signal. After each parameter is set in the software, each register must be written to the device.

The other options in this tab allow configuration of the various ramps and shift keying controls of the ADF4159.

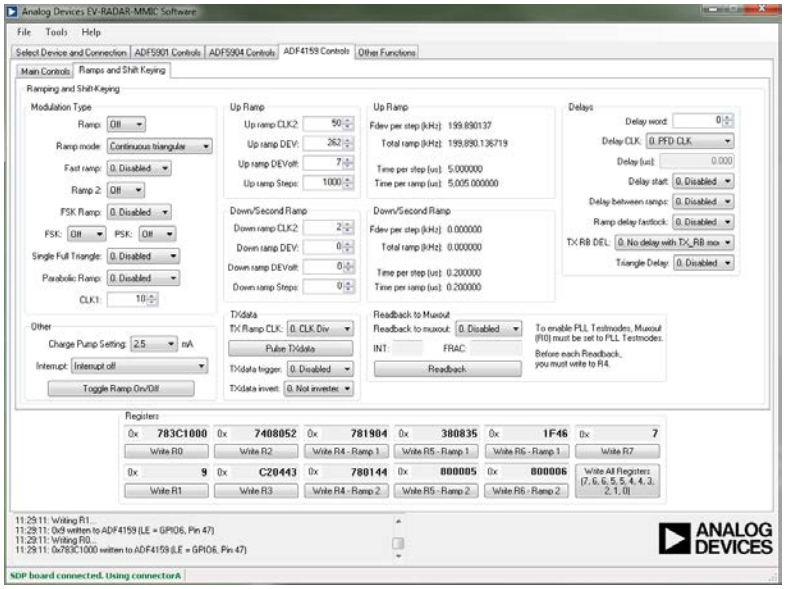

13410-006

Figure 6. ***Ramp and Shift Keying*** *Tab*

EVALUATION AND TEST PROCEDURES

To evaluate and test the performance of the ADF5901, ADF5904, and ADF4159, use the following procedure:

1. Install the EV-RADAR-MMIC2 evaluation software.
2. Connect the EV-ADAR-D2S board to the EV-RADAR-MMIC2 evaluation board.
3. Connect the SDP board to the EV-RADAR-MMIC2.
4. Connect the dc blocked TX_OUT2 connector (J9) to the spectrum analyzer.
5. Connect the 24.026 GHz, −50 dBm dc blocked signal from the signal source to the RX4_RFIN connector (J6).
6. Run the EV-RADAR-MMIC software.
7. Select the SDP board and the EV-RADAR-MMIC2 (ADF5901, ADF5904, and ADF4159) device in the **Select Device and Connection** tab of the software window.
8. The software is set with default settings for the following setup:
   a. Lock the ADF4159 to 12.0125 GHz (24.025 GHz on the ADF5901).
   b. Calibrate the ADF5901 to 24.125 GHz.
9. In the **ADF5904 Controls** tab, click **Initialize** to power up the ADF5904.
10. In the **ADF4159 Controls** tab under the **Main Controls** section, click **Write All Registers** to power up the ADF4159.
11. In the **ADF5901 Controls** tab, click **Initialize ADF5901** to power up and calibrate the ADF5901. See Figure 7 for a typical setup.
12. Measure a 24.025 GHz signal on TX_OUT2 (J9) on the spectrum analyzer
13. Measure a 1 MHz baseband output signal on the O5 connector on the EV-ADAR-D2S board.

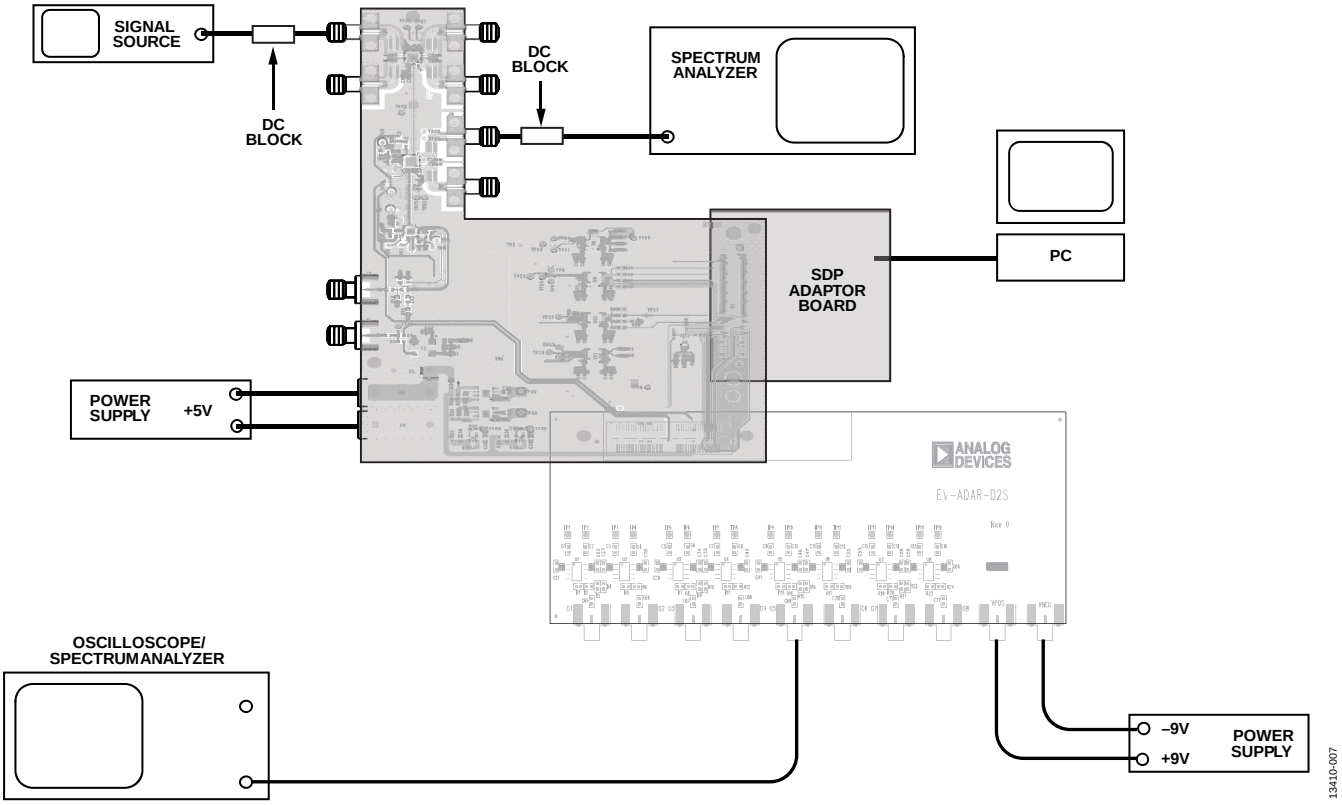

Figure 7. Typical Evaluation Setup

For another method to evaluate and test the performance of the ADF5901, ADF5904, and ADF4159, use the following procedure:

1. Install the EV-RADAR-MMIC evaluation software.
2. Connect the EV-ADAR-D2S evaluation board to the EV-RADAR-MMIC2 evaluation board.
3. Connect the SDP board to the EV-RADAR-MMIC2.
4. Connect the dc blocked TX_OUT2 (J9) connector to a delay cable or antenna.
5. Connect a delay cable or antenna to RX4_RFIN (J6) connector.
6. Run the EV-RADAR-MMIC software.
7. Select the SDP board and the EV-RADAR-MMIC2 (ADF5901, ADF5904, and ADF4159) device in the **Select Device and Connection** tab of the software window.
8. The software is set with default conditions for the following setup:
   a. Lock the ADF4159 to 12.0125 GHz (24.025 GHz on ADF5901).
   b. Calibrate the ADF5901 to 24.125 GHz.
   c. Generate a 5 ms, 200 MHz triangular ramp (24.025 GHz to 24.225 GHz).
9. In the **ADF5904 Controls** tab, click **Initialize** to power up the ADF5904.
10. In the **ADF4159 Controls** tab under the **Main Controls** section, click **Write All Registers** to power up the ADF4159.
11. In the **ADF5901 Controls** tab, click **Initialize ADF5901** to power up and calibrate the ADF5901. See Figure 8 and Figure 9 for the typical setups.
12. In the **ADF4159 Ramps and Shift Keying** tab, enable the ramp and click **Write R0** to enable the ramping of the ADF5901 Tx outputs.
13. Measure the baseband output signal on the O5 connector on the EV-ADAR-D2S board.

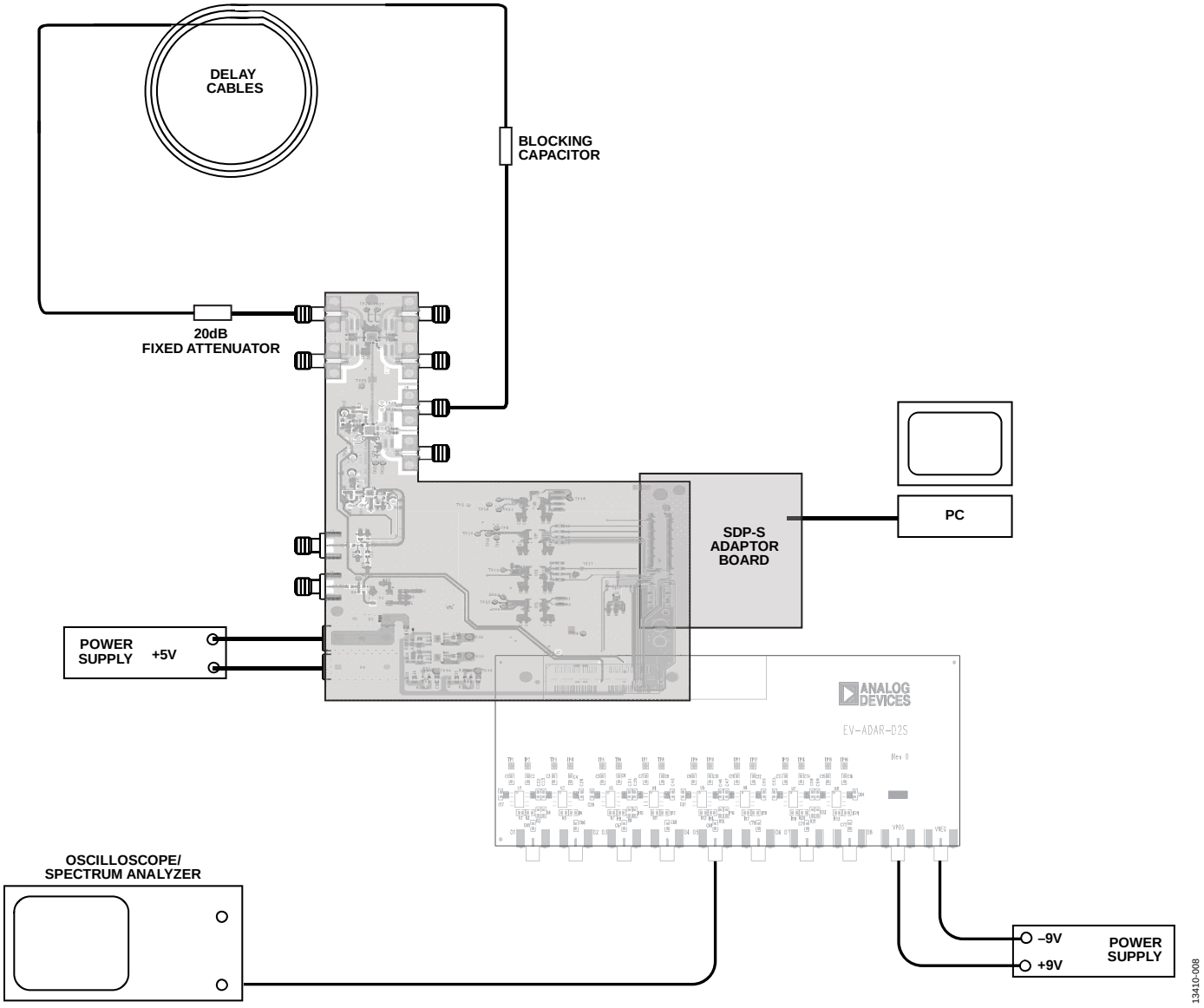

Figure 8. Typical Evaluation Setup with Cables

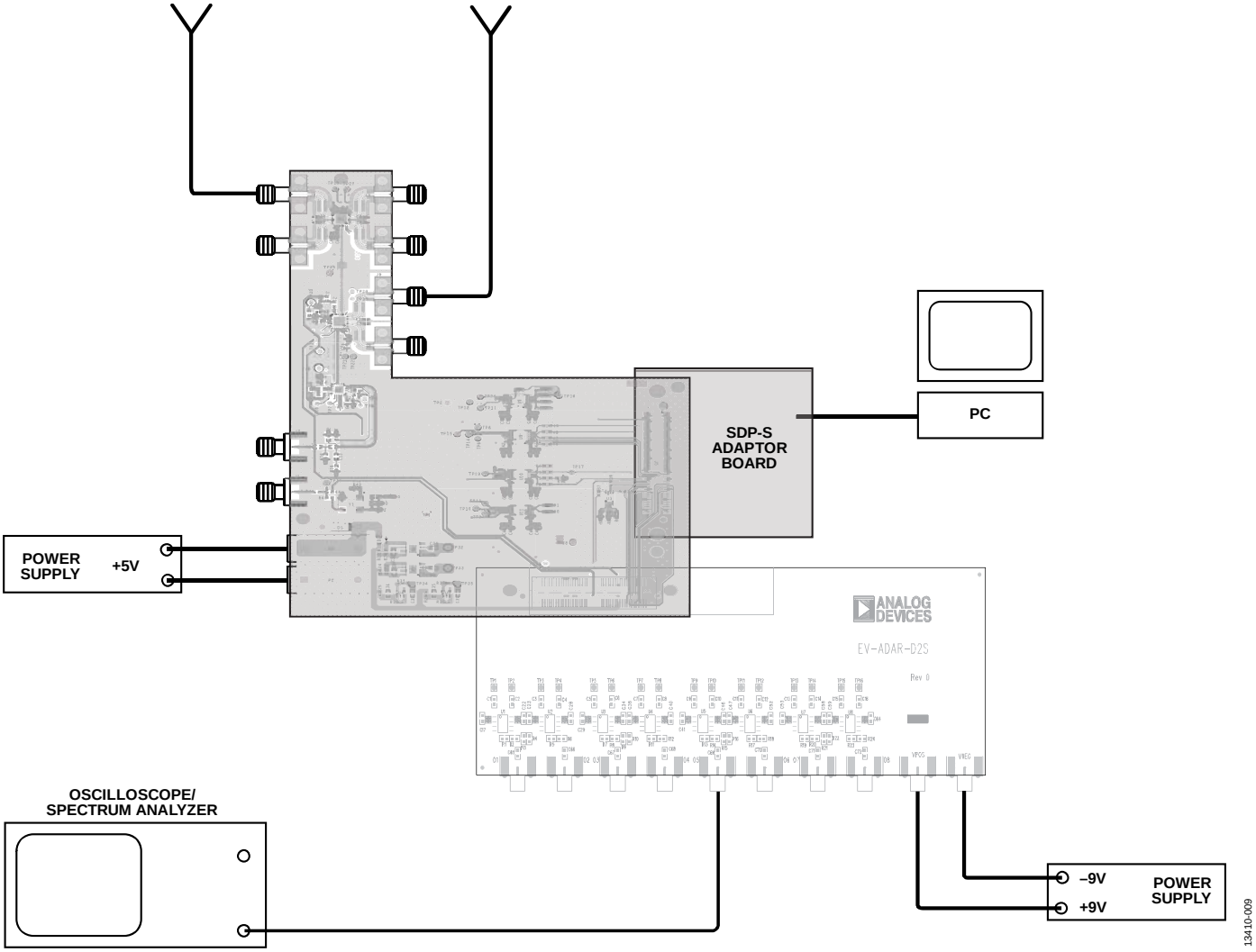

Figure 9. Typical Evaluation Setup with Antenna

EVALUATION BOARD SCHEMATICS AND ARTWORK

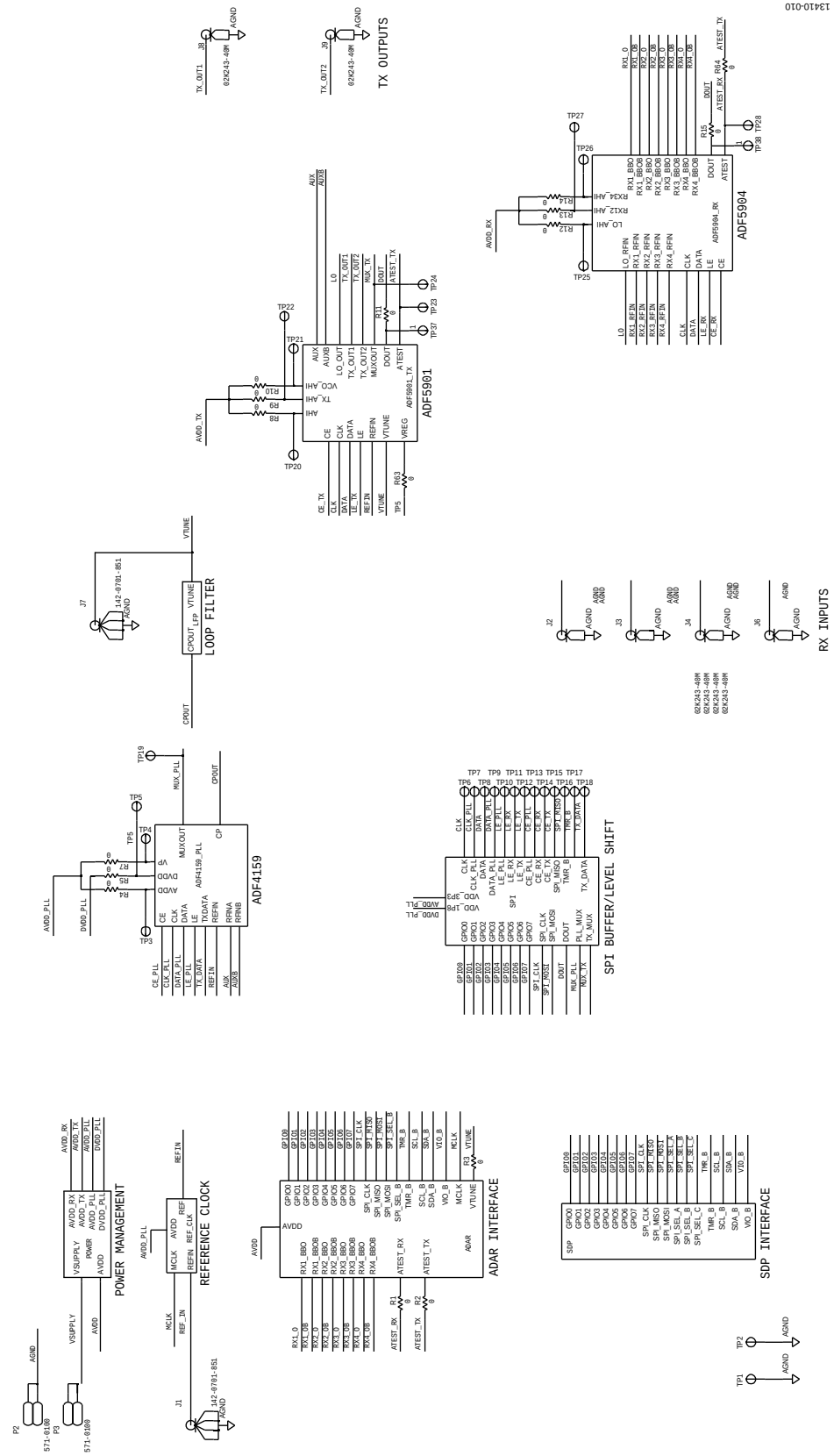

Figure 10. Evaluation Board Schematic (Page 1)

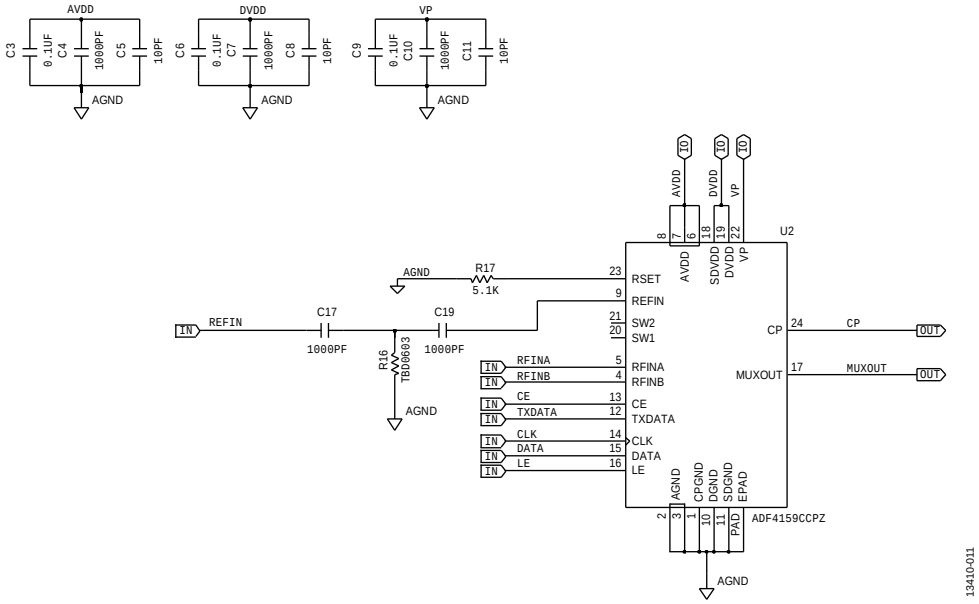

Figure 11. Evaluation Board Schematic (Page 2)

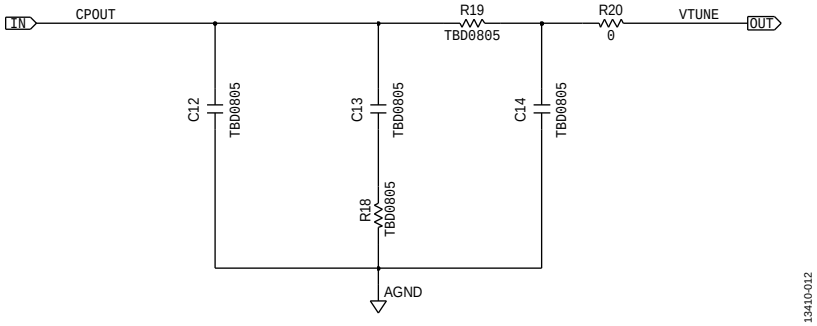

Figure 12. Evaluation Board Schematic (Page 3)

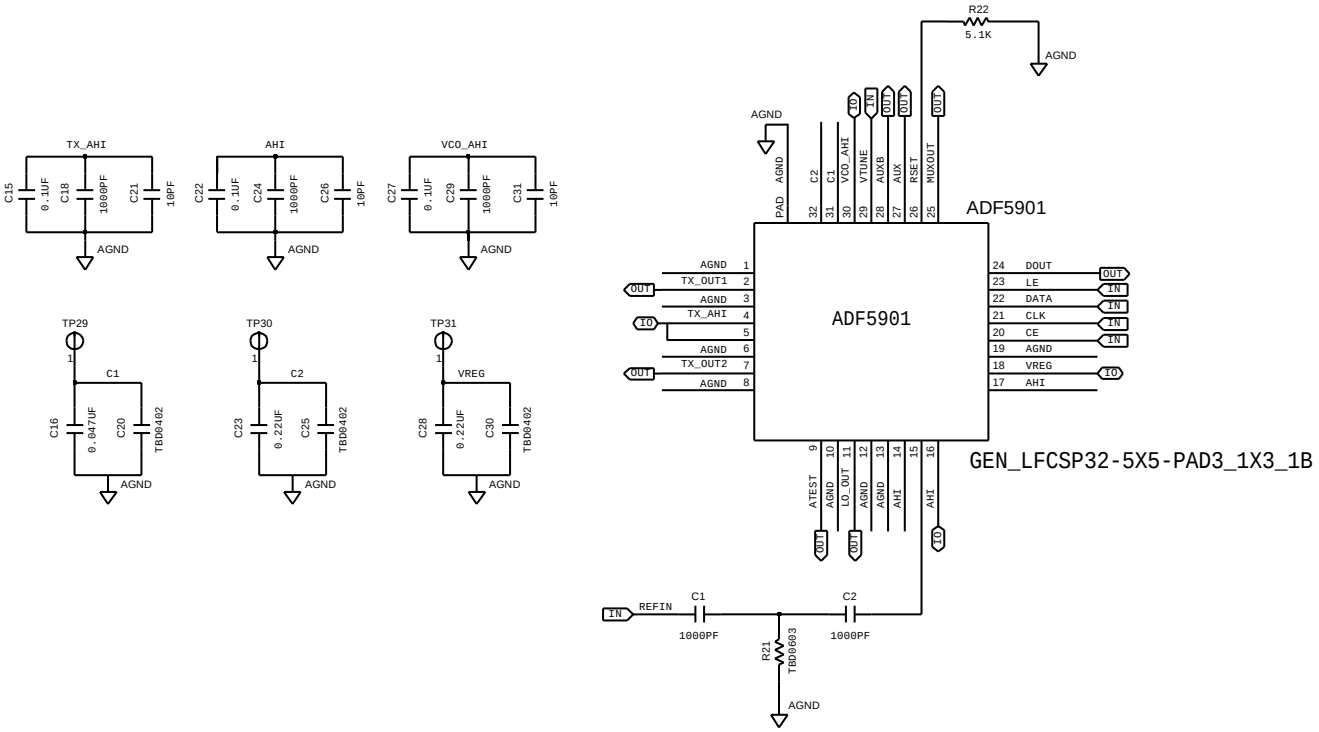

Figure 13. Evaluation Board Schematic (Page 4)

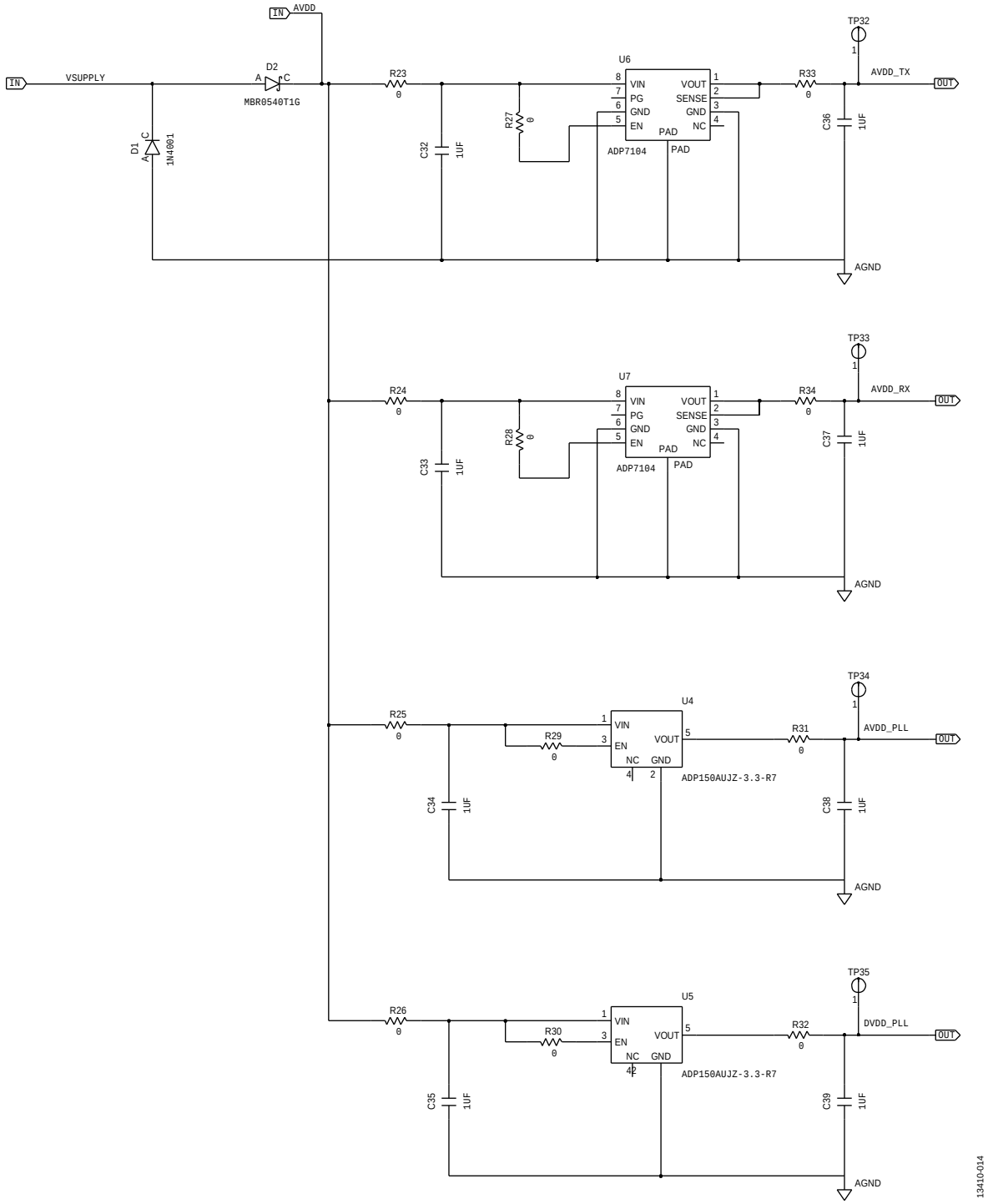

Figure 14. Evaluation Board Schematic (Page 5)

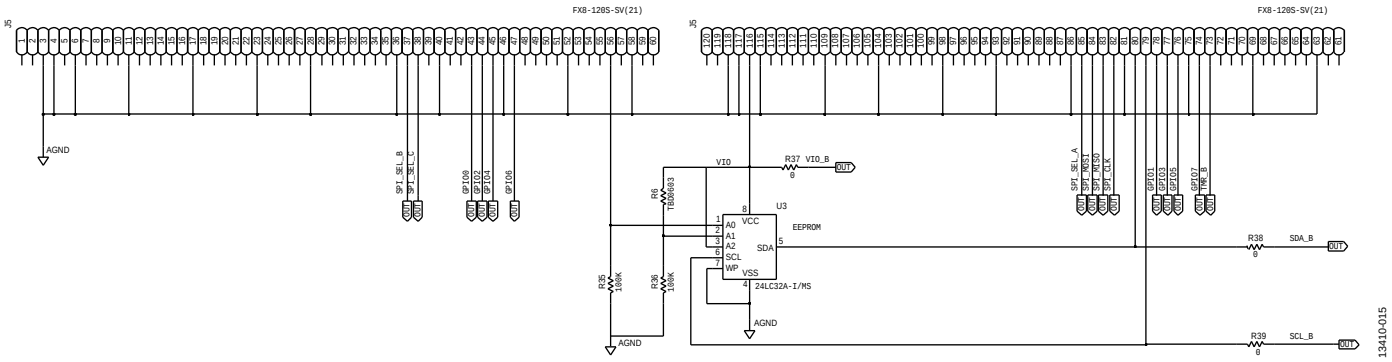

Figure 15. Evaluation Board Schematic (Page 6)

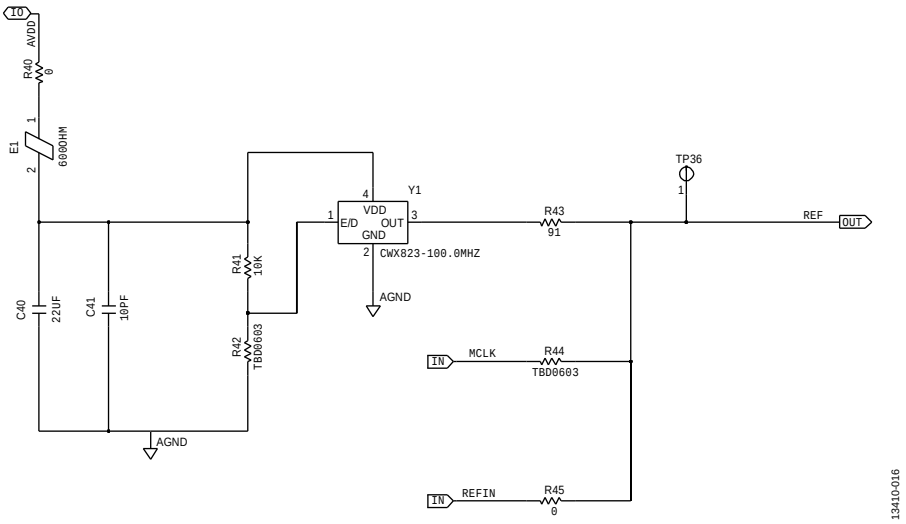

Figure 16. Evaluation Board Schematic (Page 7)

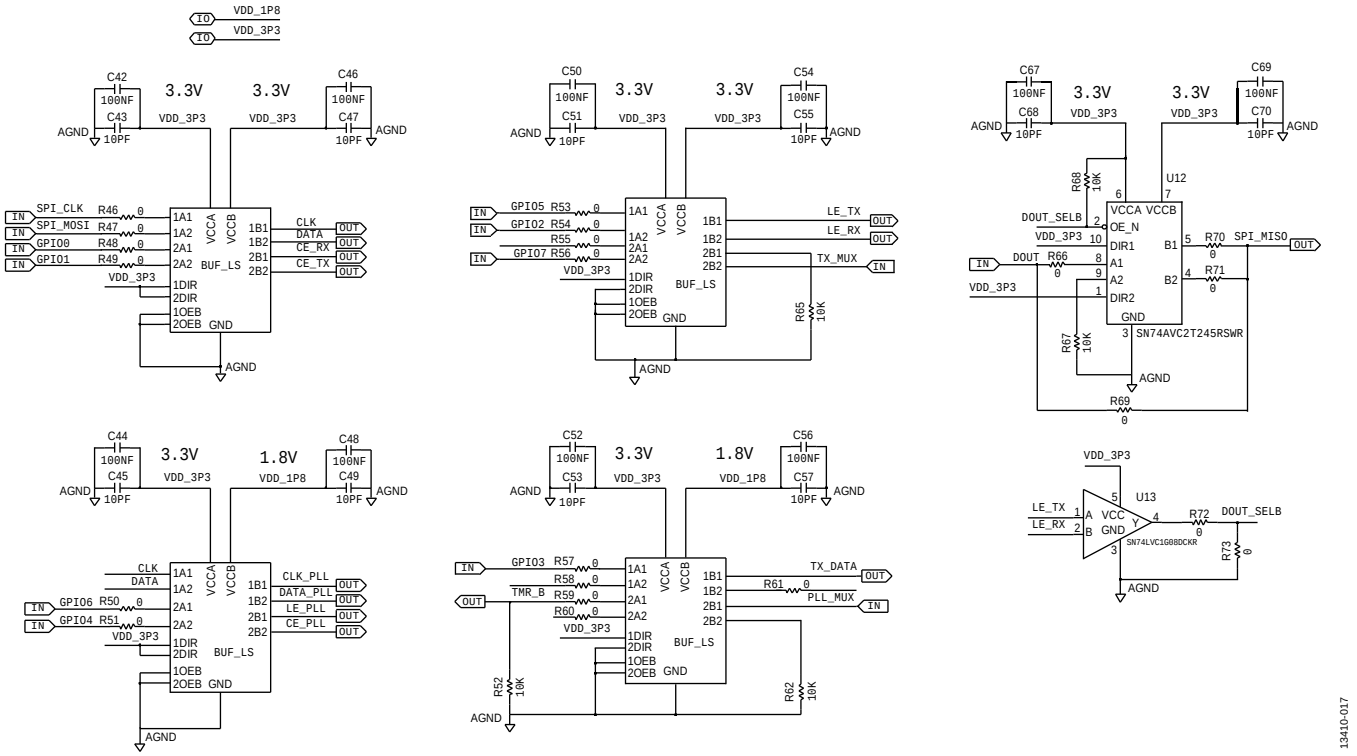

Figure 17. Evaluation Board Schematic (Page 8)

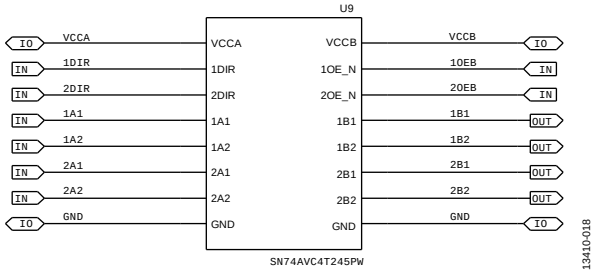

Figure 18. Evaluation Board Schematic (Page 9)

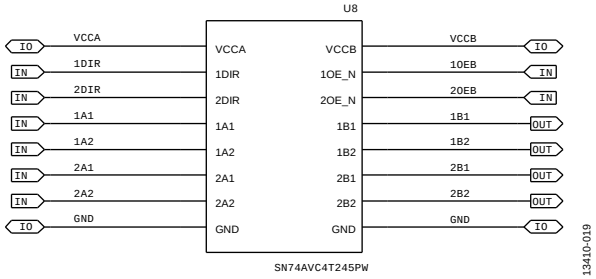

Figure 19. Evaluation Board Schematic (Page 10)

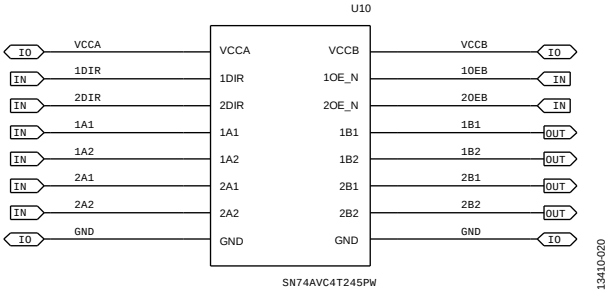

Figure 20. Evaluation Board Schematic (Page 11)

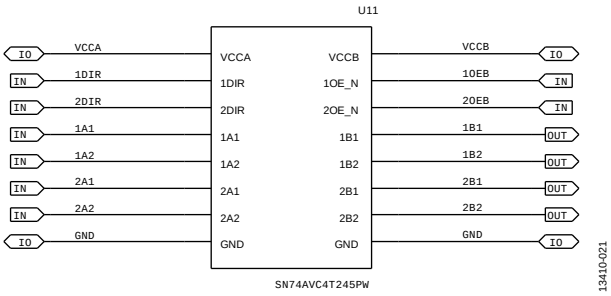

Figure 21. Evaluation Board Schematic (Page 12)

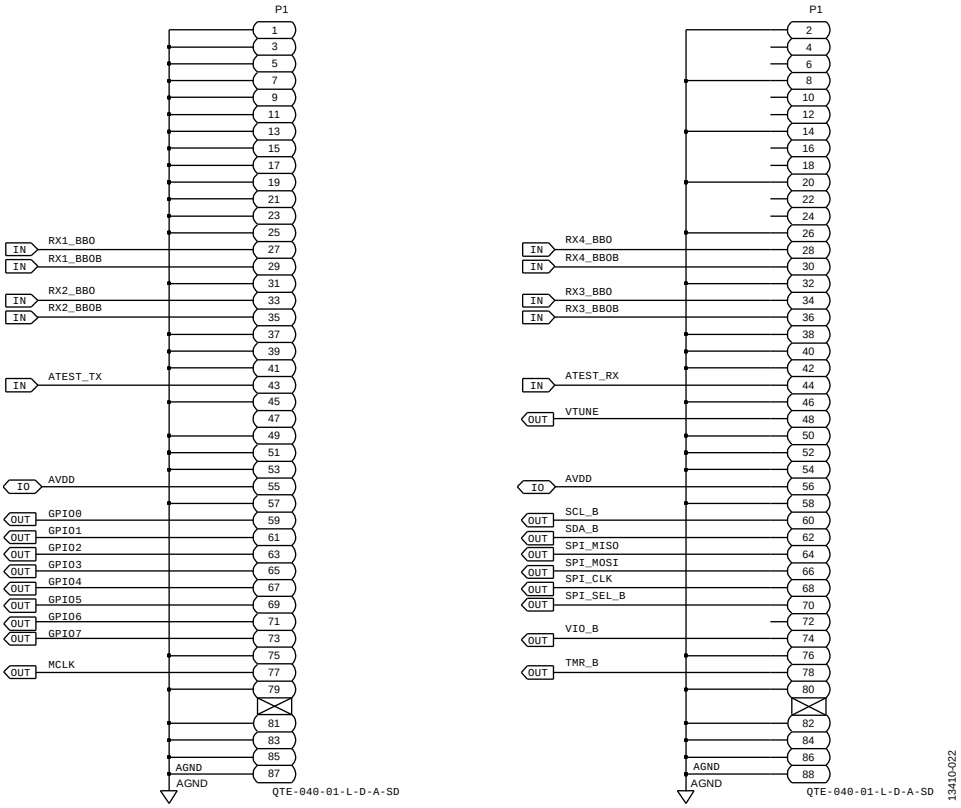

Figure 22. Evaluation Board Schematic (Page 13)

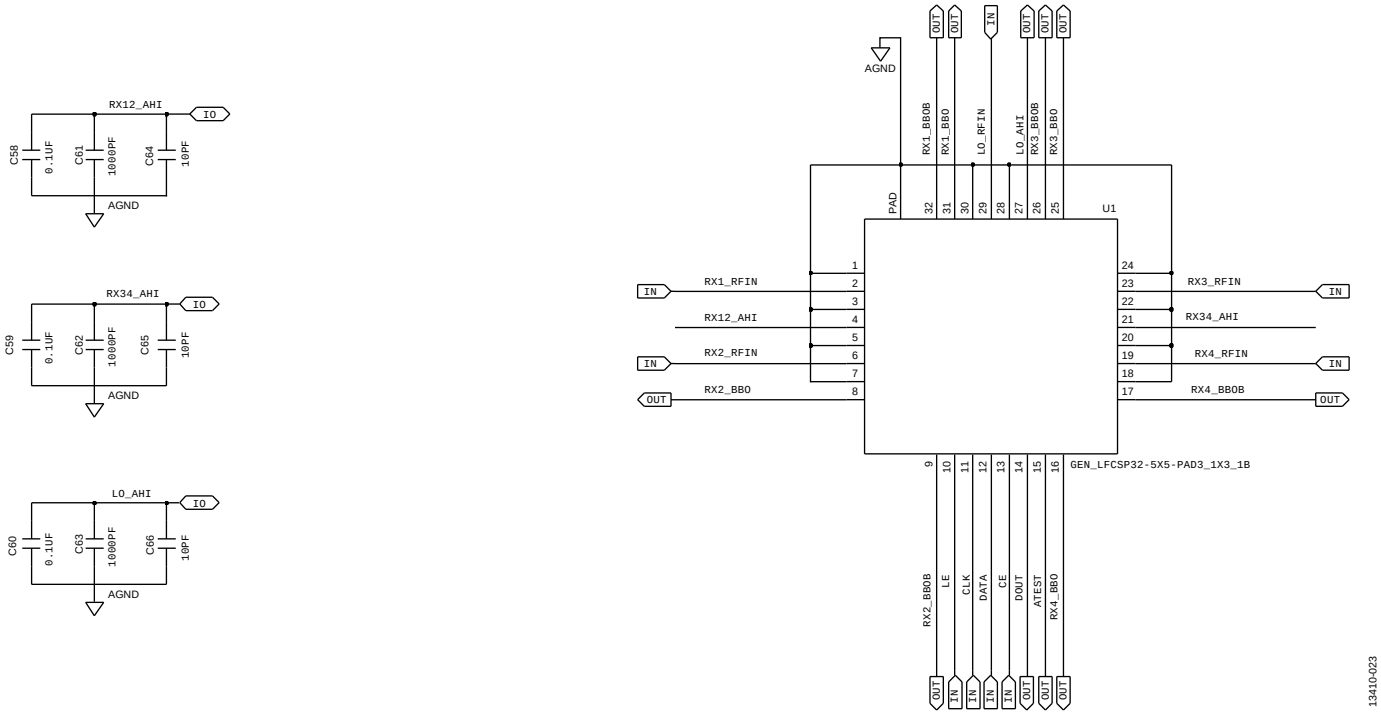

Figure 23. Evaluation Board Schematic (Page 14)

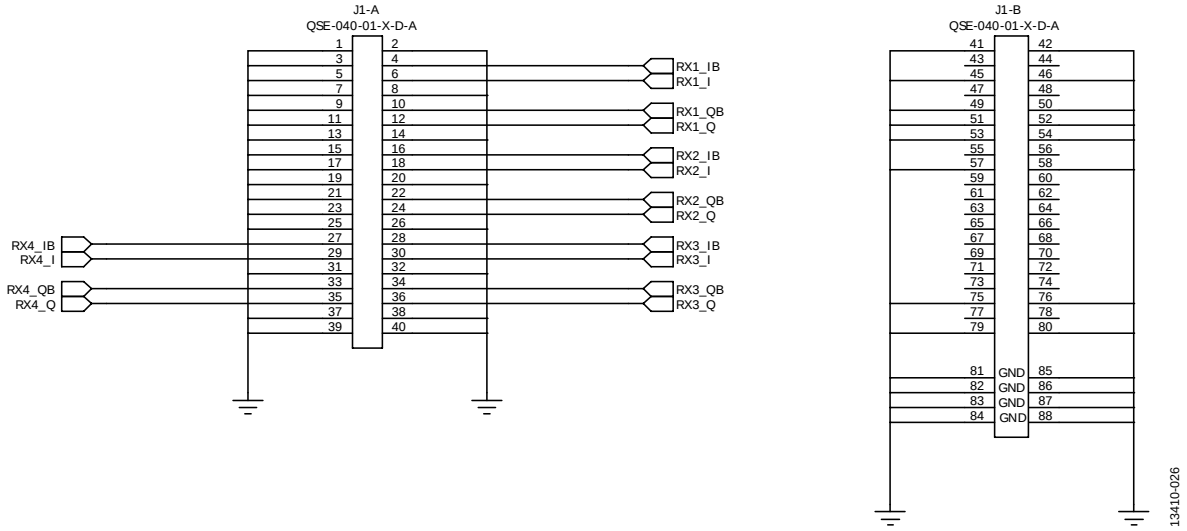

Figure 24. EV-ADAR-D2S Schematic (Page 1)

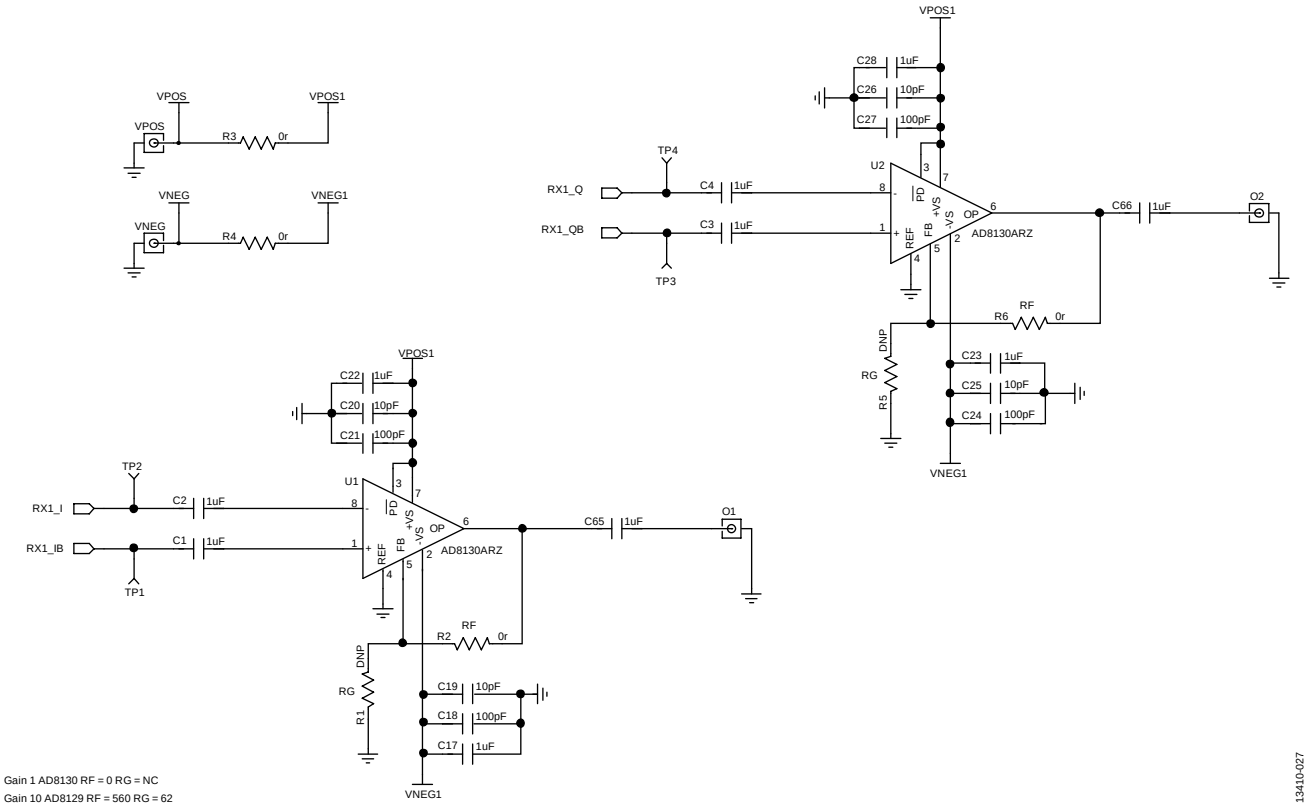

Figure 25. EV-ADAR-D2S Schematic (Page 2)

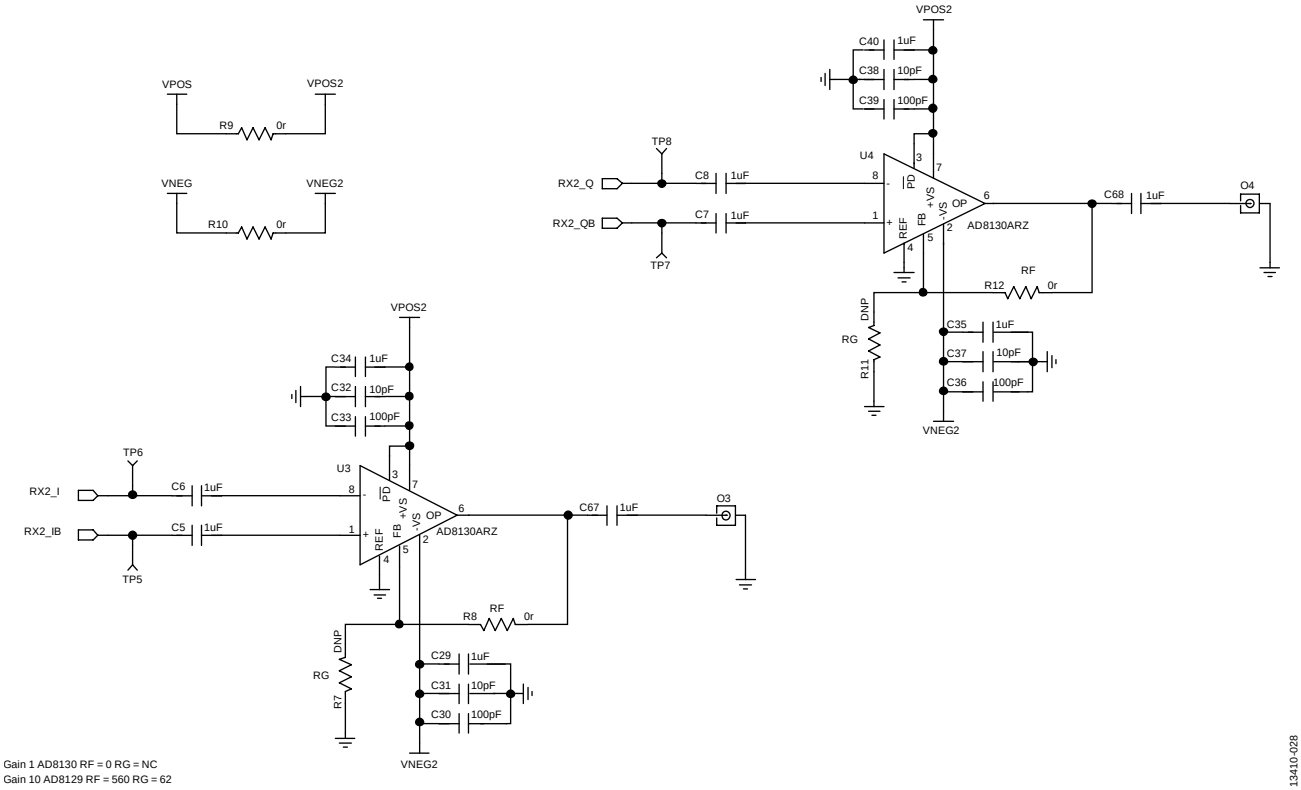

Figure 26. EV-ADAR-D2S Schematic (Page 3)

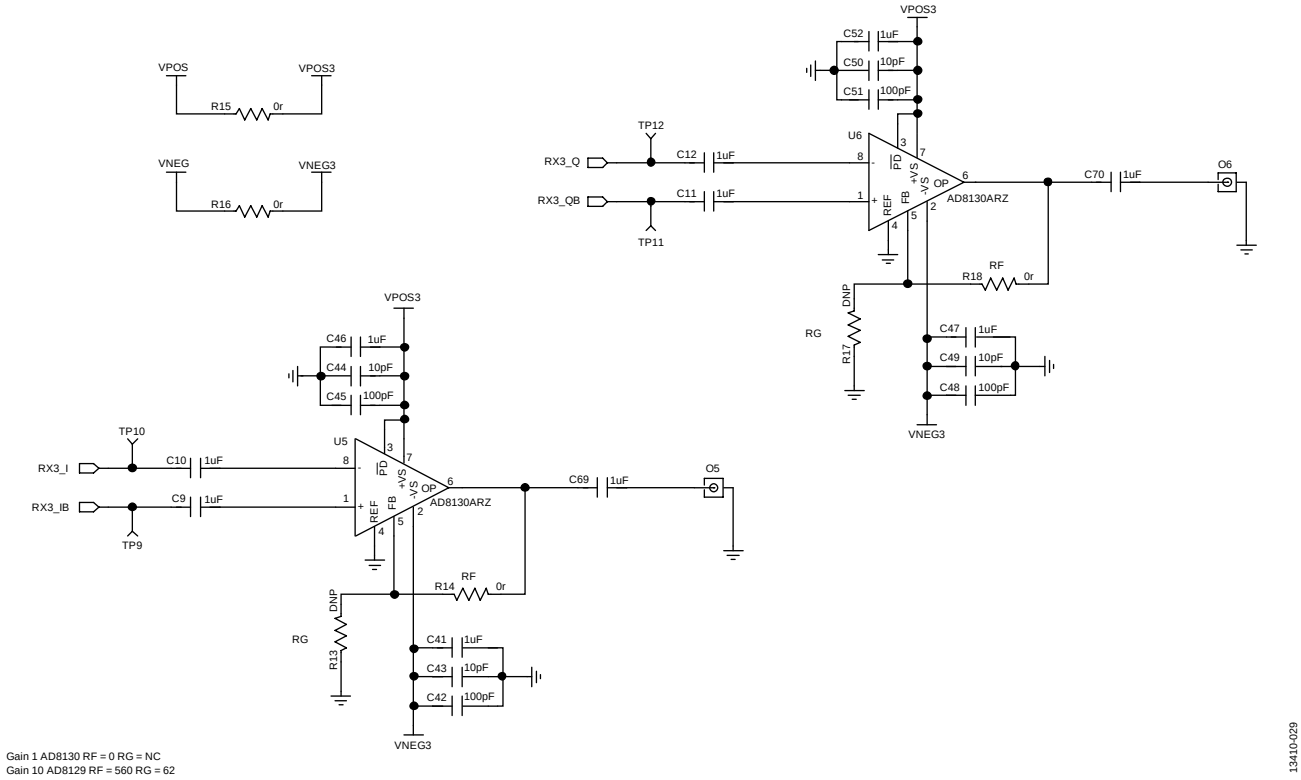

Figure 27. EV-ADAR-D2S Schematic (Page 4)

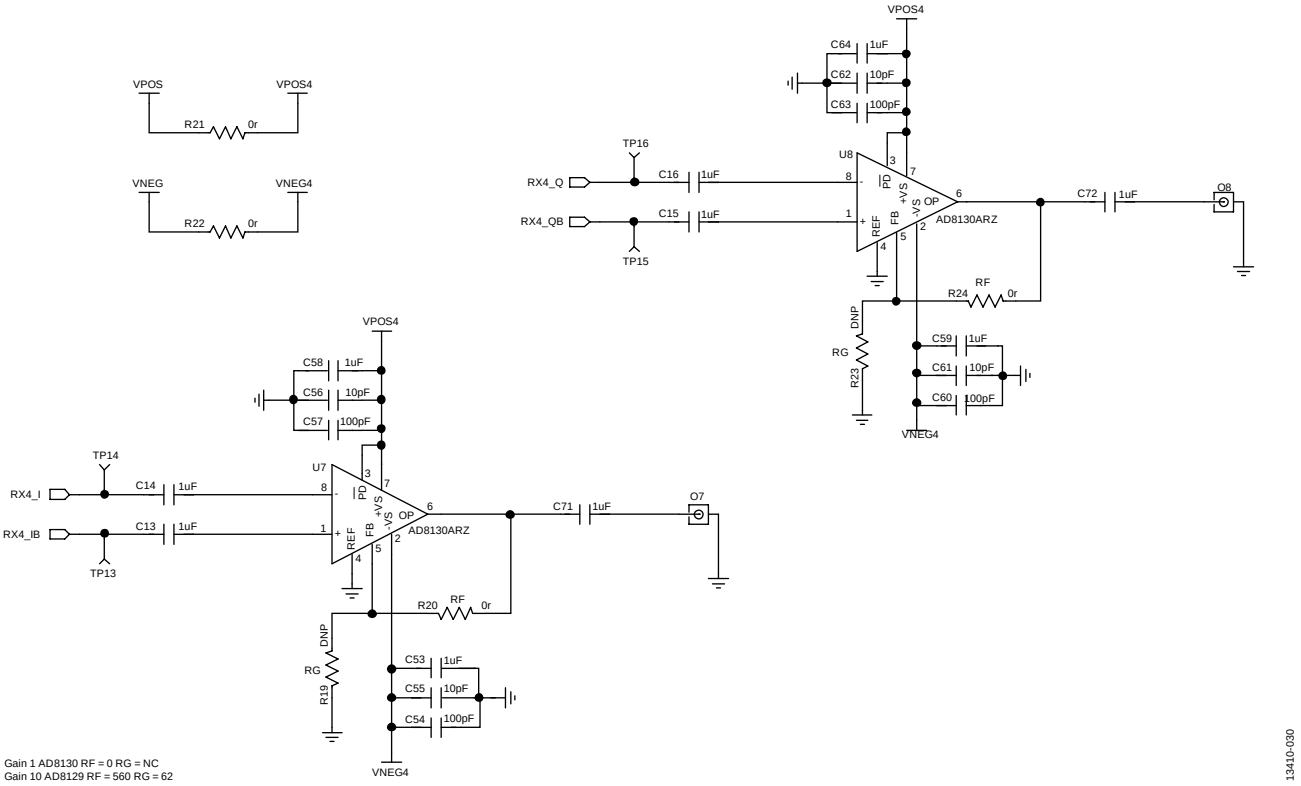

Figure 28. EV-ADAR-D2S Schematic (Page 5)

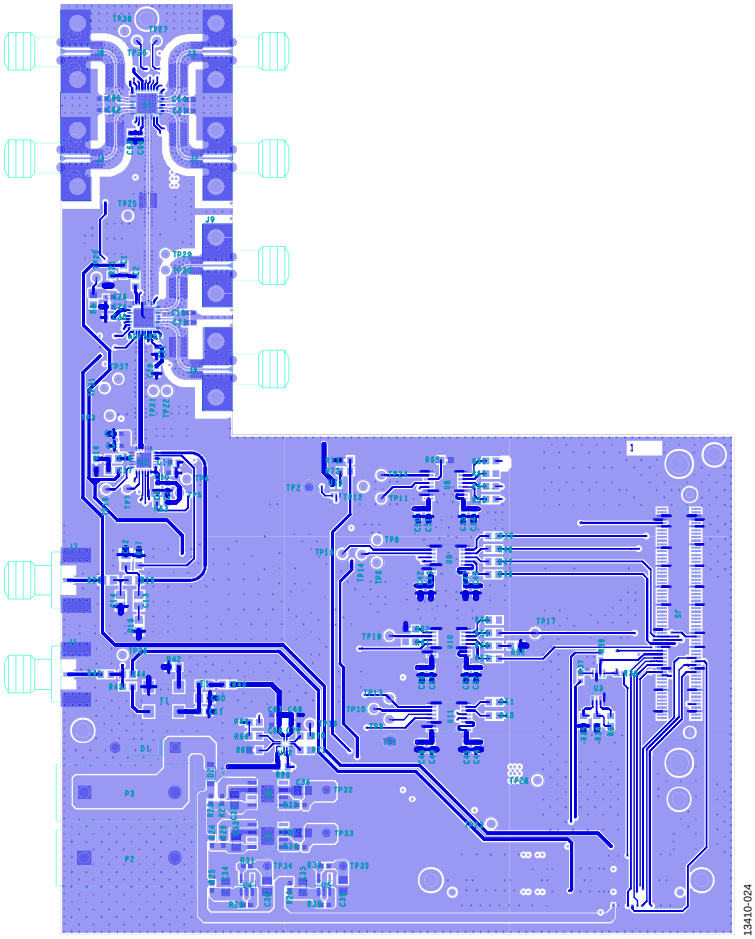

Figure 29. Layer 1 (Component Side)

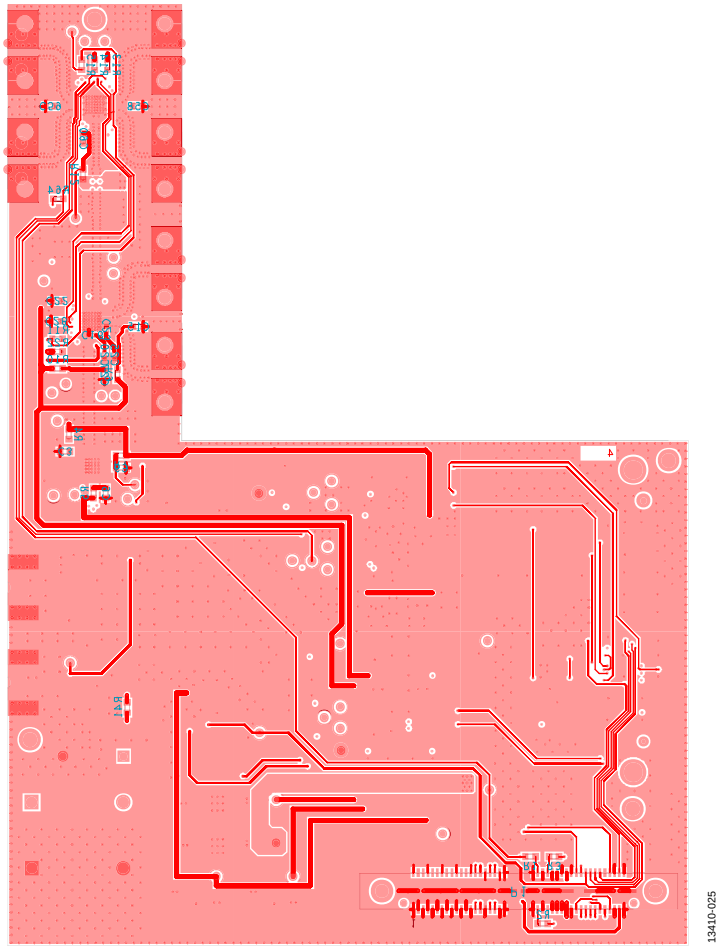

Figure 30. Layer 4 (Bottom Side)

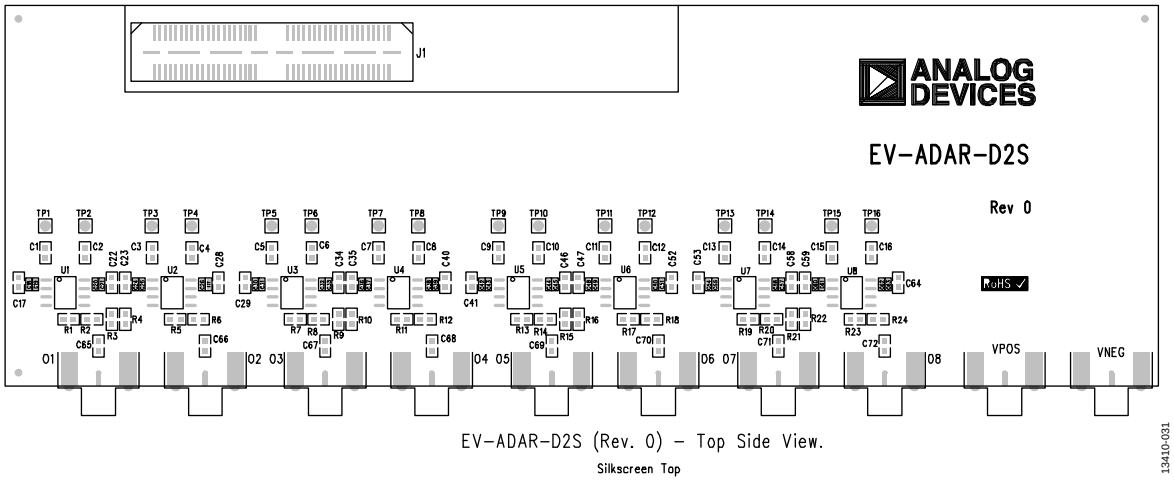

Figure 31. EV-ADAR-D2S Assembly

ORDERING INFORMATION

BILL OF MATERIALS

Table 2. EV-RADAR-MMIC2 Board

Qty	Reference Designator	Description	Manufacturer	Part Number
4	C1, C2, C17, C19	1 nF capacitors	AVX	06035A102JAT2A
9	C4, C7, C10, C18, C24, C29, C61 to C63	1 nF capacitors	AVX	04023C102KAT2A
19	C5, C8, C11, C21, C26, C31, C43, C45, C47, C49, C51, C53, C55, C57, C64 to C66, C68, C70	10 pF capacitors	AVX	04023A100JAT2A
1	C12	220 pF capacitor	Multicomp	MCCA001042
1	C13	3.3 nF capacitor	Kemet	C0805C332J5GACTU
1	C14	100 pF capacitor	Multicomp	MCCA001040
9	C3, C6, C9, C15, C22, C27, C58 to C60	0.1 µF capacitors	AVX	06033C104JAT2A
1	C16	47 nF capacitor	Kemet	C0402C473K3RACTU
3	C20, C25, C30	Do not insert	Not applicable	Not applicable
1	C23	0.22 µF capacitor	Taiyo Yuden	JMK105B7224KV-F
1	C28	0.22 µF capacitor	AVX	06033C224KAT2A
8	C32 to C39	1 µF capacitors	AVX	08053C105KAZ2A
1	C40	22 µF capacitor	Murata	GRM21BE70G226ME51L
1	C41	10 pF capacitor	AVX	06035A100JAT2A
10	C42, C44, C46, C48, C50, C52, C54, C56, C67, C69	100 nF capacitors	AVX	04023C104KAT2A
1	D1	Diode	Multicomp	1N4001
1	D2	Schottky diode	ON Semiconductor	MBR0520LT1G
1	E1	Ferrite bead	Wuerth Elektronik	7427-92642
2	J1, J7	SMA connectors	Emerson	142-0701-851
6	J2 to J4, J6, J8, J9	3.5 mm K type SMA connectors	Rosenberger	02K243-40M
1	J5	120-way connector	Hirose	FX8-120S-SV(21)
1	P1	High speed connector	Samtec	QTE-040-01-L-D-A-SD
1	P2	Black 4 mm banana socket	Deltron	571-0100
1	P3	Red 4 mm banana socket	Deltron	571-0500
34	R1 to R5, R7 to R15, R40, R45 to R51, R53 to R61, R66, R70, R72	0 Ω, resistors	Multicomp	MC 0.063W 0603 0R
10	R6, R16, R21, R42, R44, R63, R64, R69, R71, R73	Do not insert	Not applicable	Not applicable
2	R17, R22	5.1 kΩ resistors	Multicomp	MC 0.063W 0603 5k1
1	R18	510 Ω resistor	Multicomp	MC 0.1W 0805 1% 510R
1	R19	1 kΩ resistor	Multicomp	MC 0.1W 0805 1% 1K
1	R20	0 Ω resistor	Multicomp	MC 0.1W 0805 0R
15	R23 to R34, R37 to R39	0 Ω resistors	Multicomp	MC 0.0625W 0402 1% 0R
2	R35, R36	100 kΩ resistors	Multicomp	MC 0.063W 0603 5% 100K
1	R41	10 kΩ resistor	Multicomp	MC 0.063W 0603 10K
1	R43	91 Ω resistor	Multicomp	MC 0.063W 0603 1% 91R
5	R52, R62, R65, R67, R68	10 kΩ resistors	Multicomp	MC 0.063W 0603 10K
29	TP3 to TP18, TP20 to TP22, TP24 to TP27, TP29 to TP31, TP36 to TP38	Test points	Not applicable	Not applicable
2	TP1 to TP2	Black test points	Vero	20-2137
7	TP19, TP23, TP26, TP32 to TP35	Red test points	Vero	20-313137
4	U8 to U11	4-bit bus transceivers	Texas Instruments	SN74AVC4T245PW
1	U12	Dual bus transceiver	Texas Instruments	SN74AVC2T245RSWR
1	U13	IC-TTL single positive and gate	Texas Instruments	SN74LVC1G08DCKR
1	ADF5901	ADF5901, 24 GHz Tx	Analog Devices	ADF5901WCCPZ-U6
1	U1	ADF5904, 24 GHz Rx	Analog Devices	ADF5904WCCPZ-U4

Qty	Reference Designator	Description	Manufacturer	Part Number
1	U2	ADF4159, 13 GHz fractional-N PLL	Analog Devices	ADF4159CCPZ
1	U3	32 kΩ, I2C serial EEPROM	Microchip	24LC32A-I/MS
1	U4	3.0 V linear regulator	Analog Devices	ADP150AUJZ-3.0
1	U5	1.8 V linear regulator	Analog Devices	ADP150AUJZ-1.8
2	U6, U7	Ultralow noise, linear regulators, 3.3 V	Analog Devices	ADP7104ARDZ-3.3
1	Y1	Oscillator, 100 MHz	Connor-Winfield	CWX113-100.0M

Table 3. EV-ADAR-D2S Board

Reference Designator	Description	Manufacturer	Part Number
C19, C20, C25, C26, C31, C32, C37, C38, C43, C44, C49, C50, C55, C56, C61, C62	10 pF capacitors	AVX	04025A100DAT2A
O1, O2, O3, O4, O5, O6, O7, O8, VNEG, VPOS	SMA connectors	Emerson	142-0701-851
U1 to U8	270 MHz differential amplifiers	Analog Devices	AD8130ARZ
C18 , C21, C24, C27 ,C30, C33, C36, C39, C42, C45, C48, C51, C54, C57, C60, C63	100 pF capacitors	Murata	GRM1555C1H101JD01D
C1 to C17, C22, C23, C28, C29, C34, C35, C40, C41, C46, C47, C52, C53, C58, C59, C64 to C72	1 nF capacitor	Murata	GRM188R61E105KA12D
R2 to R4, R6, R8 to R10, R12, R14 to R16, R18, R20 to R22, R24	0 Ω link resistors	Multicomp	MC 0.063W 0603 0R
J1	80-pin socket connector	Samtec	QSE-040-01-F-D-A

RELATED LINKS

Resource	Description
ADF5901	24 GHz VCO and PGA with 2-channel PA Output
ADF5904	4-Channel, 24 GHz, Receiver Downconverter
ADF4159	Direct Modulation/Fast Waveform Generating, 13 GHz, Fractional-N Frequency Synthesizer
ADP7104	20 V, 500 mA, Low Noise, CMOS LDO

I²C refers to a communications protocol originally developed by Philips Semiconductors (now NXP Semiconductors).

ESD Caution

ESD (electrostatic discharge) sensitive device. Charged devices and circuit boards can discharge without detection. Although this product features patented or proprietary protection circuitry, damage may occur on devices subjected to high energy ESD. Therefore, proper ESD precautions should be taken to avoid performance degradation or loss of functionality.

Legal Terms and Conditions

By using the evaluation board discussed herein (together with any tools, components documentation or support materials, the "Evaluation Board"), you are agreeing to be bound by the terms and conditions set forth below ("Agreement") unless you have purchased the Evaluation Board, in which case the Analog Devices Standard Terms and Conditions of Sale shall govern. Do not use the Evaluation Board until you have read and agreed to the Agreement. Your use of the Evaluation Board shall signify your acceptance of the Agreement. This Agreement is made by and between you ("Customer") and Analog Devices, Inc. ("ADI"), with its principal place of business at One Technology Way, Norwood, MA 02062, USA. Subject to the terms and conditions of the Agreement, ADI hereby grants to Customer a free, limited, personal, temporary, non-exclusive, non-sublicensable, non-transferable license to use the Evaluation Board FOR EVALUATION PURPOSES ONLY. Customer understands and agrees that the Evaluation Board is provided for the sole and exclusive purpose referenced above, and agrees not to use the Evaluation Board for any other purpose. Furthermore, the license granted is expressly made subject to the following additional limitations: Customer shall not (i) rent, lease, display, sell, transfer, assign, sublicense, or distribute the Evaluation Board; and (ii) permit any Third Party to access the Evaluation Board. As used herein, the term "Third Party" includes any entity other than ADI, Customer, their employees, affiliates and in-house consultants. The Evaluation Board is NOT sold to Customer; all rights not expressly granted herein, including ownership of the Evaluation Board, are reserved by ADI. CONFIDENTIALITY. This Agreement and the Evaluation Board shall all be considered the confidential and proprietary information of ADI. Customer may not disclose or transfer any portion of the Evaluation Board to any other party for any reason. Upon discontinuation of use of the Evaluation Board or termination of this Agreement, Customer agrees to promptly return the Evaluation Board to ADI. ADDITIONAL RESTRICTIONS. Customer may not disassemble, decompile or reverse engineer chips on the Evaluation Board. Customer shall inform ADI of any occurred damages or any modifications or alterations it makes to the Evaluation Board, including but not limited to soldering or any other activity that affects the material content of the Evaluation Board. Modifications to the Evaluation Board must comply with applicable law, including but not limited to the RoHS Directive. TERMINATION. ADI may terminate this Agreement at any time upon giving written notice to Customer. Customer agrees to return to ADI the Evaluation Board at that time. LIMITATION OF LIABILITY. THE EVALUATION BOARD PROVIDED HEREUNDER IS PROVIDED "AS IS" AND ADI MAKES NO WARRANTIES OR REPRESENTATIONS OF ANY KIND WITH RESPECT TO IT. ADI SPECIFICALLY DISCLAIMS ANY REPRESENTATIONS, ENDORSEMENTS, GUARANTEES, OR WARRANTIES, EXPRESS OR IMPLIED, RELATED TO THE EVALUATION BOARD INCLUDING, BUT NOT LIMITED TO, THE IMPLIED WARRANTY OF MERCHANTABILITY, TITLE, FITNESS FOR A PARTICULAR PURPOSE OR NONINFRINGEMENT OF INTELLECTUAL PROPERTY RIGHTS. IN NO EVENT WILL ADI AND ITS LICENSORS BE LIABLE FOR ANY INCIDENTAL, SPECIAL, INDIRECT, OR CONSEQUENTIAL DAMAGES RESULTING FROM CUSTOMER'S POSSESSION OR USE OF THE EVALUATION BOARD, INCLUDING BUT NOT LIMITED TO LOST PROFITS, DELAY COSTS, LABOR COSTS OR LOSS OF GOODWILL. ADI'S TOTAL LIABILITY FROM ANY AND ALL CAUSES SHALL BE LIMITED TO THE AMOUNT OF ONE HUNDRED US DOLLARS ($100.00). EXPORT. Customer agrees that it will not directly or indirectly export the Evaluation Board to another country, and that it will comply with all applicable United States federal laws and regulations relating to exports. GOVERNING LAW. This Agreement shall be governed by and construed in accordance with the substantive laws of the Commonwealth of Massachusetts (excluding conflict of law rules). Any legal action regarding this Agreement will be heard in the state or federal courts having jurisdiction in Suffolk County, Massachusetts, and Customer hereby submits to the personal jurisdiction and venue of such courts. The United Nations Convention on Contracts for the International Sale of Goods shall not apply to this Agreement and is expressly disclaimed.

©2015–2017 Analog Devices, Inc. All rights reserved. Trademarks and registered trademarks are the property of their respective owners.
UG13410-0-4/17(B)

www.analog.com