# 1.5MHz, 1A Synchronous Step-Down Converter with Soft Start

## DESCRIPTION

The EUP3418 is a constant frequency, current mode, PWM step-down converter. The device integrates a main switch and a synchronous rectifier for high efficiency. The 2.7V to 5.5V input voltage range makes the EUP3418 ideal for powering portable equipment that runs from a single cell Lithium-Ion (Li+) battery or 3-cell NiMH/ NiCd batteries. The output voltage can be regulated as low as 0.6V. The EUP3418 supports up to 1A load current and can also run at 100% duty cycle for low dropout applications, extending battery life in portable systems.

Switching frequency is internally set at 1.5MHz, allowing the use of small surface mount inductors and capacitors. The internal synchronous switch increases efficiency while eliminates the need for an external Schottky diode.

## FEATURES

- 25μA Quiescent Current at Light Load
- High Efficiency up to 96%
- 1.5MHz Constant Switching Frequency
- 1A Available Load Current
- 2.7V to 5.5V Input Voltage Range
- Adjustable Output Voltage as Low as 0.6V
- 100% Duty Cycle Low Dropout Operation
- No Schottky Diode Required
- Short Circuit and Thermal Protection
- Excellent Line and Load Transient Response
- ＜1μA Shutdown Current
- Soft Start Function
- Available in SOT23-5, TSOT23-5 Package
- RoHS Compliant and 100% Lead(Pb)-Free Halogen-Free

## APPLICATIONS

- Cellular and Smart Phones
- Portable Media Players/ MP3 Players
- Digital Still and Video Cameras
- Portable Instruments
- WLAN PC Cards

## Typical Application Circuit

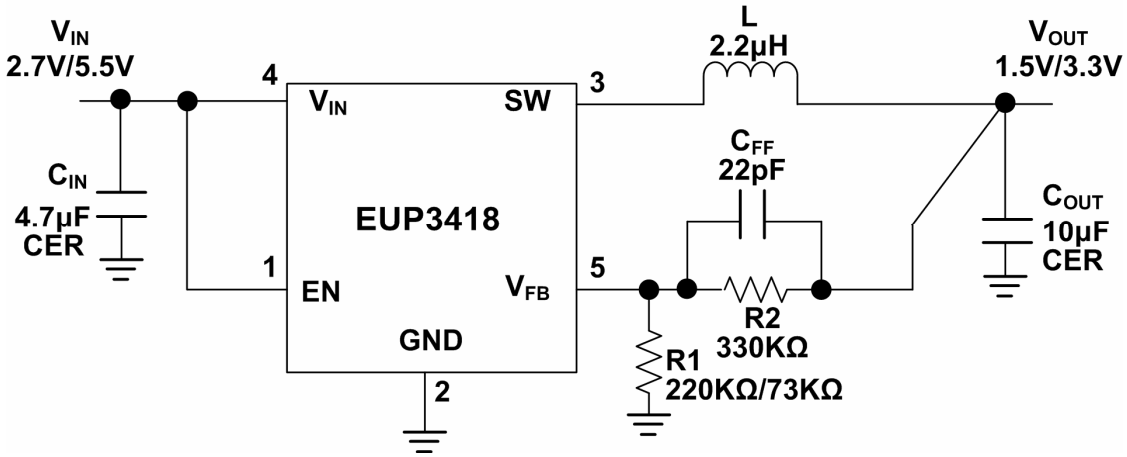


**Figure 1. Adjustable Output**