ETX-701

ETX CPU Module with AMD Geode™ LX Series Processor

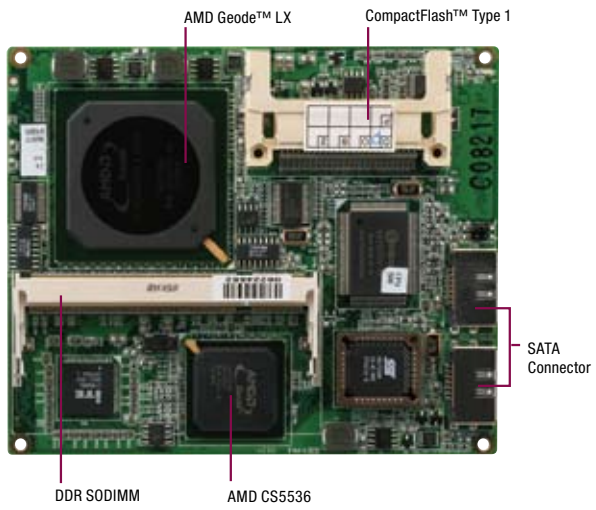

Features

- **Onboard AMD Geode™ LX Series Processor**
- **AMD CS5536**
- **SODIMM DDR 333/400 Memory, Max. 1 GB**
- **10/100Base-TX Ethernet**
- **CRT, Up to 24-bit LVDS LCD, TTL LCD**
- **AC97 2.3 Codec 2CH Audio**
- **PATA x 2, SATA 3.0Gb/s x 2 (on Module), CompactFlash™ Type 1 Slot x 1 (On Module)**
- **USB2.0 x 4, COM x 2**
- **+5V Only Operation**

Specifications

System	
Form Factor	ETX
Processor	Onboard AMD Geode™ LX Series Processor LX700: 433 MHz LX800: 500 MHz (Default) LX900: 600 MHz
System Memory	200-pin DDR SODIMM x 1, Max. 1 GB (DDR333 up to 1 GB; DDR400 up to 512 MB)
Chipset	AMD Geode™ LX + CS5536
I/O Chipset	Winbond W83627HG
Ethernet	Realtek RTL8139DL, 10/100Base-TX
BIOS	Award, PLCC type, 2 MB ROM
EEPROM	Microchip 24LCS52-I/SN, save BIOS and configuration data
Wake on LAN	Yes
Watchdog Timer	Generates a time-out system reset
H/W Status Monitoring	Supports power supply voltages, fan speed and temperature monitoring
Expansion Interface	32-bit PCI x 4 8-bit/ 16-bit ISA SM Bus x 1 I2C x 1
Power Requirement	+5V DC
Power Consumption (Typical)	LX800, DDR333 1 GB 0.25A@+12V, 2.02A@+5V w/TF-ECB-901A-A10-01
Board Size	4.5" (L) x 3.75" (W) (114mm x 95mm)
Gross Weight	0.66 lb (0.3 Kg)
Operating Temperature	32°F ~ 140°F (0°C ~ 60°C)
Storage Temperature	-40°F ~ 176°F (-40°C ~ 80°C)
Operating Humidity	0% ~ 90% relative humidity, non-condensing
MTBF	110,000
Display	Supports CRT/LCD Simultaneous Display
Chipset	AMD Geode™ LX processor integrated
Memory	Shared system memory up to 254 MB
Resolutions	Up to 1920 x 1440 @ 32bpp at 85 Hz for CRT Up to 1600 x 1200 @ 32bpp at 100 Hz for CRT Up to 1600 x 1200 @ 32bpp at 60 Hz for LCD
LCD Interface	18-bit/ 24-bit TTL (TF-ETX-701-A10) 18-bit single-channel LVDS (TF-ETX-701-A10-01) 24-bit single-channel LVDS (TF-ETX-701-A10-02)

I/O	
Storage	PATA x 2 (four devices), SATA 3.0Gb/s x 2 (on module), CompactFlash™ Type 1 slot x 1 (on module)
Serial Port	2
Parallel Port	1
USB	USB2.0 x 4
PS/2 Port	Keyboard x 1, Mouse x 1
IrDA	One IrDA Tx/Rx header
Audio	Mic-in, Line-in, Line-out

Packing List

- **M2.5 Screw x 4**
- **Product CD**
- **ETX-701**

AAEON® an ASUS assoc. co.

Note: All specifications are subject to change without notice.

ETX-701

Dimension

Unit: mm

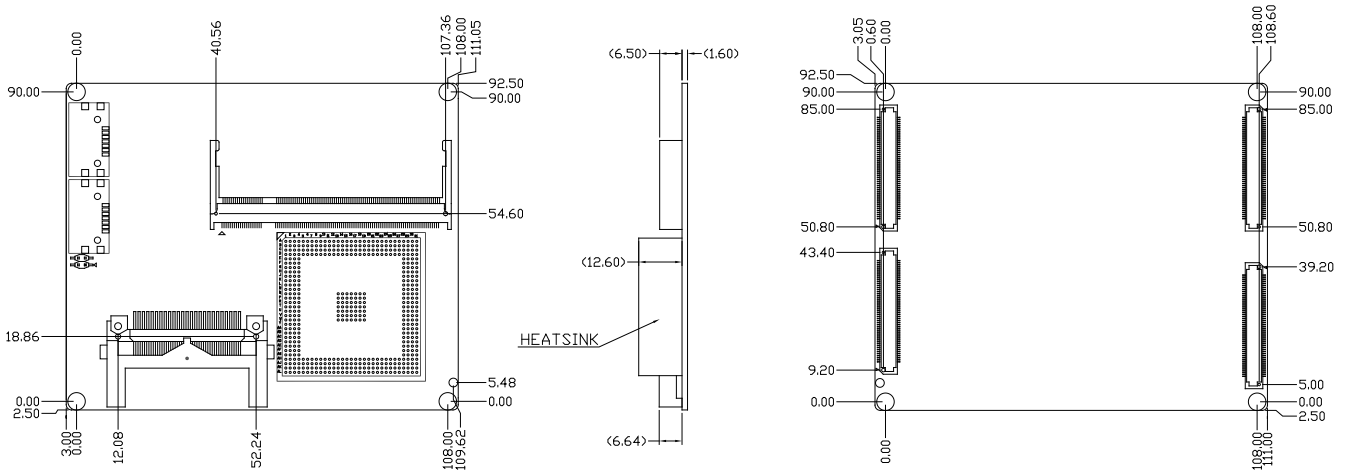

Ordering Information

Part Number	CPU	Memory	Display	LVDS	Storage	LAN	USB2.0	KB/MS	URAT	LPT	Expansion Slot	Power	Temp
TF-ETX-701-A10	AMD Geode™ LX800/500MHz	DDR SODIMM x 1 Max.1GB	CRT, TTL	24-bit TTL	SATA2 x 1 PATA x 2 CF x 1	FE x 1	4	1	2	1	8-bit/16-bit/ISA 32-bit PCI x 4	5V	0°C~60°C
TF-ETX-701-A10-01	AMD Geode™ LX800/500MHz	DDR SODIMM x 1 Max.1GB	CRT, LVDS	18-bit Single Channel	SATA2 x 1 PATA x 2 CF x 1	FE x 1	4	1	2	1	8-bit/16-bit/ISA 32-bit PCI x 4	5V	0°C~60°C
TF-ETX-701-A10-02	AMD Geode™ LX800/500MHz	DDR SODIMM x 1 Max.1GB	CRT, LVDS	24-bit Single Channel	SATA2 x 1 PATA x 2 CF x 1	FE x 1	4	1	2	1	8-bit/16-bit/ISA 32-bit PCI x 4	5V	0°C~60°C

Optional Accessories

- **TF-ECB-902M-A10**
  ETX Carrier Board, LAN, Audio, 4 COM, USB2.0, PCI, ISA, AT/ATX, Rev. A1.0 (For ETX-LN, ETX-945GSE, ETX-701, ETX-700)
- **TF-PER-A036**
  Passive Heatsink, for ETX-700/ ETX-701
- **TF-PER-A050**
  HeatSpreader, For ETX-700/ ETX-701