Panasonic

SPEC FILE

Product Number : PT-**RW930B**/**RW930W**
PT-**RW930LB**/**RW930LW**

Product Name : DLP™ Projectors

DLP™ Projector

PT-RW930B/RW930W/RW930LB/RW930LW

Specifications

Main unit

Power supply		AC100 - 240V 10.4-5.0A 50Hz/60Hz
Power consumption		1,050W
	NORMAL: 742W ECO: 617W LONG LIFE1: 410-588	
	LONG LIFE 2: 375-588W LONG LIFE 3: 349-588W SHUTTER: 82W	
	STANDBY MODE [ECO]*1: 0.2W STANDBY MODE [NORMAL]: 3W	
	STANDBY MODE (When the [QUICK STARTUP] function is enabled): Approx. 85 W	
	*Operating Temperature: 25 °C (77 °F), Altitude: 700m (2,297 ft),	
	ICE62087: 2008 Broadcast contents,	
	Picture mode: Standard, Dynamic Contrast2	
BTU value		Max 3,584 BTU
LCDpanel	Panel size	16.5 mm (0.65 in) diagonal (16:10 aspect ratio)
	Display method	DLP™ chip × 1, DLP™ system
	Pixels	1,024,000 (1280 × 800) × 1, total of 1,024,000 pixels
Lens	PT-RW930B/W	Powered zoom/focus lenses (1.7–2.4:1), F 1.7–1.9, f 25.6–35.7 mm
	PT-RW930LB/LW	Optional powered zoom/focus lenses and fixed-focus lens
Light source		Laser Diode Laser class 1(Class3R for US models)
		Luminance life for set: 20,000 hours at half luminance (normal)/
		24,000 hours at half luminance (Eco)
		* Temperature: 30°C (86°F), Altitude 700m (2,297 ft), Dust: 0.15mg/m^3
		Dynamic Contrast3
		43,800 hours at constant luminance (LONG LIFE1)
		61,320 hours at constant luminance (LONG LIFE2)
		87,600 hours at constant luminance (LONG LIFE3)
Screen size		1.27–15.24 m (50–600 inches) (16:10 aspect ratio) *1.27 – 5.08 m (50 – 200 inches) with the ET-DLE055 (16:10 aspect ratio) *2.54 – 7.62 m (100 – 350 inches) with the ET-DLE030 (16:10 aspect ratio)
Brightness*3		10,000 lumens (Center)*2/ 9,400 lumens*3
		9,400 lumens (Half luminance) (NORMAL)
		7,500 lumens (Half luminance) (ECO)
		3,700 lumens (Constant luminance) (LONG LIFE1)
		3,100 lumens (Constant luminance) (LONG LIFE2)
		2,500 lumens (Constant luminance) (LONG LIFE3)
Center-to-corner uniformity*3		90%
Contrast*3		10,000:1 (All White/All Black) (Dynamic Contrast3)
Resolution		1280 × 800 pixels (Input signals that exceed this resolution will be converted to 1280 x 800 pixels.)
Scanning frequency	HDMI/DVI-D	fH: 15- 100kHz, fV: 24 - 120Hz, dot clock: 25 - 162 MHz 525i (480i)*4, 625i (576i)*4, 525p (480p), 625p (576p), 750 (720)/60p, 750 (720)/50p, 1125 (1080)/60i, 1125 (1080)/50i, 1125 (1080)/25p, 1125 (1080)/24p, 1125 (1080)/24sF, 1125 (1080)/30p, 1125 (1080)/60p, 1125 (1080)/50p, VGA (640 x 480) - WUXGA (1920 x 1200) compatible with non-interlaced signals only
	RGB	fH: 15- 100kHz, fV: 24 - 120Hz, dot clock: 20 - 162 MHz

Scanning frequency

Y_PB_PR (Y_CB_CR)	525i (480i):	f_H 15.73 kHz; f_V 59.9 Hz,
	625i (576i):	f_H 15.63 kHz; f_V 59.9 Hz,
	525p (480p):	f_H 31.50 kHz; f_V 60 Hz,
	625p (576p):	f_H 31.25 kHz; f_V 50 Hz,
	750 (720)/60p:	f_H 45.00 kHz; f_V 60 Hz,
	750 (720)/50p:	f_H 37.50 kHz; f_V 50 Hz,
	1125 (1080)/60i:	f_H 33.75 kHz; f_V 60 Hz,
	1125 (1080)/50i:	f_H 28.13 kHz; f_V 50 Hz,
	1125 (1080)/25p:	f_H 28.13 kHz; f_V 25 Hz,
	1125 (1080)/24p:	f_H 27.00 kHz; f_V 24 Hz,
	1125 (1080)/24sF:	f_H 27.00 kHz; f_V 48 Hz,
	1125 (1080)/30p:	f_H 33.75 kHz; f_V 30 Hz,
	1125 (1080)/60p:	f_H 67.50 kHz; f_V 60 Hz,
	1125 (1080)/50p:	f_H 56.25 kHz; f_V 50 Hz
Video/S-Video	f_H: 15.73 kHz, f_V: 59.9 Hz [NTSC/NTSC4.43/PAL-M/PAL60]	
	f_H: 15.63 kHz, f_V: 50 Hz [PAL/PAL-N/SECAM]	

Geometry correction range

Projection lens Model No.	Only [KEYSTONE] used		[KEYSTONE] and [CURVED] used together				Only [CURVED] used	
	Vertical keystone correction angle α (°)	Horizontal keystone correction angle β (°)	Vertical keystone correction angle α (°)	Horizontal keystone correction angle β (°)	Min. value of R2/L2	Min. value of R3/L3	Min. value of R2/L2	Min. value of R3/L3
Supplied lens/ ET-DLE170	±40	±15	±20	±15	0.9	1.7	0.5	1
ET-DLE030*	+5/-0	0	—	—	—	—	—	—
ET-DLE055	±22	±15	±8	±8	1.7	4.3	1	2.6
ET-DLE085	±22	±15	±8	±8	1.7	4.3	1	2.6
ET-DLE150	±40	±15	±20	±15	1.1	2.6	0.6	1.5
ET-DLE250	±40	±15	±20	±15	0.7	1.3	0.4	0.7
ET-DLE350	±40	±15	±20	±15	0.4	0.8	0.3	0.5
ET-DLE450	±40	±15	±20	±15	0.3	0.6	0.2	0.3

*** Only the vertical keystone correction angle can be corrected in the direction in which the projector body moves away from the screen.**

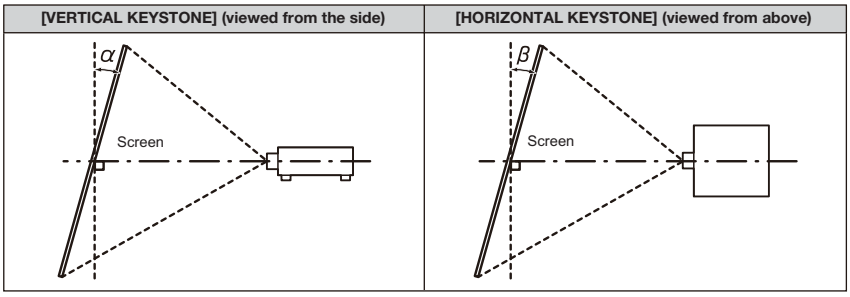

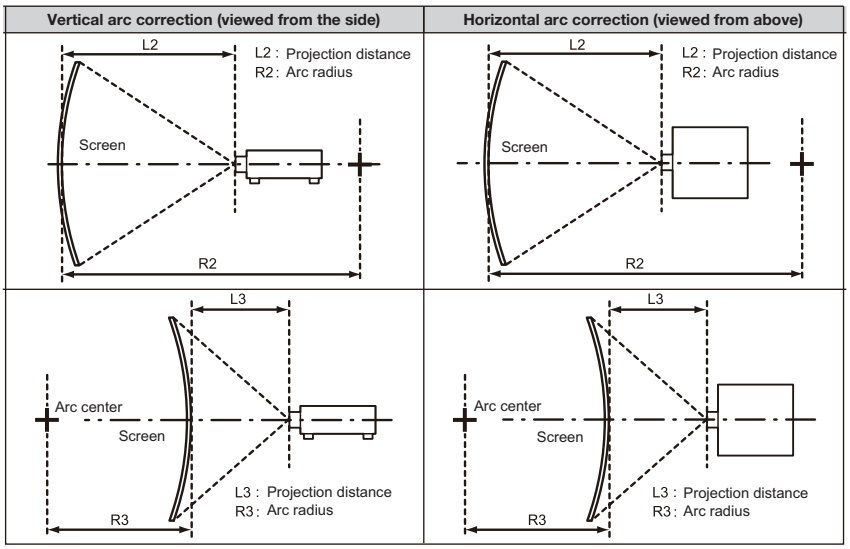

- **When [GEOMETRY] is used, the focus of the entire screen may be lost as correction increases.**
- **Make the curved screen a circular arc shape with one part of a perfect circle removed.**
- **Adjustment range of the [GEOMETRY] items may not match the listed projection range depending on the projection lens. Use this projector within the projection range, otherwise the correction may not work.**

Optical axis shift		Vertical: +60%, -16%(powered), Horizontal: +30%, -10%(When using the ET-DLE085, +28%, -10%) (powered) **NOTE: Optical axis shift function cannot be operated when used with the ET-DLE055. If using the ET-DLE030, the optical axis is fixed.**
Installation		Ceiling/floor, front/rear, 360 degree free installation
Terminals	HDMI IN	HDMI 19-pin × 1, Deep Color, compatible with HDCP,
	DVI-D IN	DVI-D 24-pin x 1, DVI 1.0 compliant, compatible with HDCP, for single link only
	RGB 1 IN	BNC × 5
	R, G, B	R: 0.7 Vp-p, 75 ohms, G: 0.7 Vp-p (G: 1.0 Vp-p for sync on G), 75 ohms, B: 0.7 Vp-p, 75 ohms HD, VD/SYNC: TTL, high impedance, positive/negative automatic
	Y, P_B, P_R (Y, C_B, C_R)	Y: 1.0 Vp-p (including sync signal), P_B/P_R (C_B/C_R): 0.7 Vp-p, 75 ohms
	Y,C	Y: 1.0 Vp-p, C: 0.286 Vp-p, 75 ohms
	Video	1.0Vp-p, 75 ohms
	RGB 2 IN	D-sub HD 15-pin (female) × 1
	R, G, B	R: 0.7 Vp-p, 75 ohms, G: 0.7 Vp-p (G: 1.0 Vp-p for sync on G), 75 ohms, B: 0.7 Vp-p, 75 ohms HD, VD/SYNC: TTL, high impedance, positive/negative automatic
	Y, P_B, P_R(Y, C_B, C_R)	Y: 1.0 Vp-p (including sync signal), P_B/P_R(C_B/C_R): 0.7 Vp-p, 75 ohms
	SERIAL/MULTI PROJECTOR SYNC IN	D-sub 9-pin (female) × 1 for external control (RS-232C compliant)
	SERIAL/MULTI PROJECTOR SYNC OUT	D-sub 9-pin (male) x 1 for link control
	REMOTE 1 IN	M3 jack x 1 for wired remote control
	REMOTE 1 OUT	M3 jack x 1 for link control (for wired remote control)
	REMOTE 2 IN	D-sub 9-pin (female) x1 for external control (parallel)
	LAN/DIGITAL LINK	RJ-45 x 1 for network and DIGITAL LINK (video/network/serial control) connection, 100Base-TX, compliant with PJLink™(Class 1) Deep Color, HDCP
Power cord length		3.0 m (9 ft 10 in)
Cabinet materials		Molded plastic
Dimensions (W × H × D)	PT-RW930B/RW930W	498 x 200*5 x 581mm (19-19/32 x 7-7/8*5 x 22-7/8in) with supplied lens
	PT-RW930LB/RW930LW	498 x 200*5 x 538 mm (19-19/32 x 7-7/8*5 x 21-3/16in) without lens
Weight	PT-RW930B/RW930W	Approx. 23.2kg (51.1lbs) with supplied lens
	PT-RW930LB/RW930LW	Approx. 22.4kg (49.4lbs) without lens
Operation noise		41 dB
Operating temperature		0–45 °C (32–113 °F)*6
Operating humidity		10%–80% (no condensation)

Remote control unit	
Power supply	3 V DC (R03/AAA type battery × 2)
Operation range	Approx. 30 m (98 ft 5 in) when operated from directly in front of the signal receptor
Dimensions (W × H × D)	48 × 145 × 27 mm (1-57/64 × 5-45/64 × 1-3/64 in)
Weight*7	Approx. 102 g (3.6 oz) including batteries

Supplied accessories

Power cord with secure lock (× 1) (× 2 for EU models)
Wireless/wired remote control unit (× 1)
Batteries for remote control (R03/AAA type × 2)
Software CD-ROM (Logo Transfer Software, Multi Monitoring & Control Software) (× 1)
Lens Mount Cover (× 1)
Lens cover (× 1) (Only models with lens)

Optional accessories	
Digital interface box	ET-YFB100G
Digital LINK Switcher	ET-YFB200G
Zoom lens (0.8–1.0:1)	ET-DLE085
Zoom lens (1.4–2.0:1)	ET-DLE150
Zoom lens (1.8–2.5:1)	ET-DLE170 (same as supplied lens)
Zoom lens (2.4–3.8:1)	ET-DLE250
Zoom lens (3.8–5.7:1)	ET-DLE350
Zoom lens (5.6–9.0:1)	ET-DLE450
Fixed-focus lens (0.38:1)	ET-DLE030
Fixed-focus lens (0.8:1)	ET-DLE055
Ceiling mount bracket	ET-PKD120H (for high ceilings) ET-PKD120S (for low ceilings)
High-ceiling mount bracket (6-axis adjustment mechanism)	ET-PKD130H
Attachment for ceiling mount bracket	ET-PKD130B
Geometry Manager Pro Upgrade kit	ET-UK20
Auto Screen Adjustment Upgrade kit	ET-CUK10
Early Warning Software	ET-SWA100*

*** The symbol at the end of the part number will vary depending on the type of license.**

***1 When the STANDBY MODE is set to Eco, network functions such as power on over the LAN will not operate.**
***2 The value of the light output at the center region of the projected image is extracted based on the light output measurement method defined by the ISO/IEC 21118:2012 international standards.**
***3 Measurement, measuring conditions, and method of notation all comply with ISO 21118 international standards.**
***4 Only compatible with dot clock frequency of 27 MHz (pixel repetition signal).**
***5 with legs at shortest position.**
***6 Limits the luminance when used in locations from 0m to 2,700m (0ft to 8,858ft) above sea level at ambient temperatures of 35°C (95°F) or higher, or from 2,700m to 4,200m (8,858ft to 13,780ft) above sea level at ambient temperatures of 25°C (77°F) or higher.**
***7 Average value. May differ depending on models.**

DLP™ Projector

PT-RW930B/RW930W/RW930LB/RW930LW

Dimensions

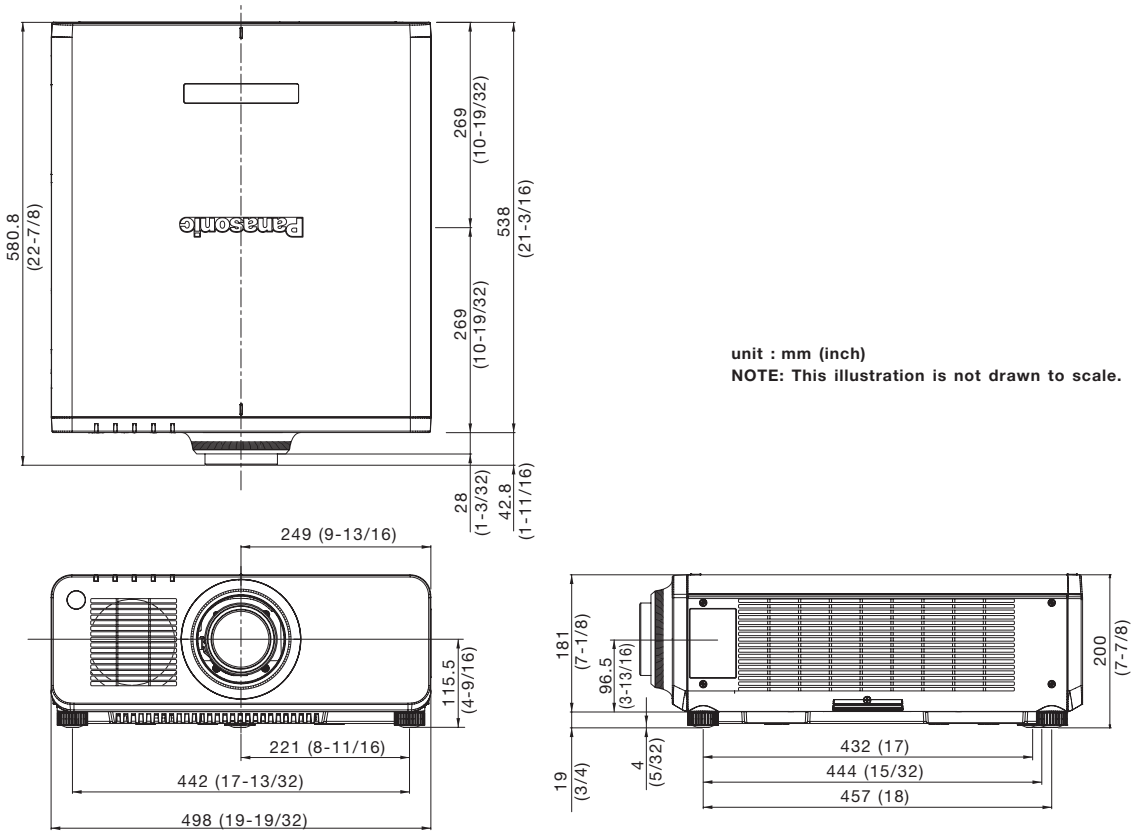

unit : mm (inch)
NOTE: This illustration is not drawn to scale.

Terminals

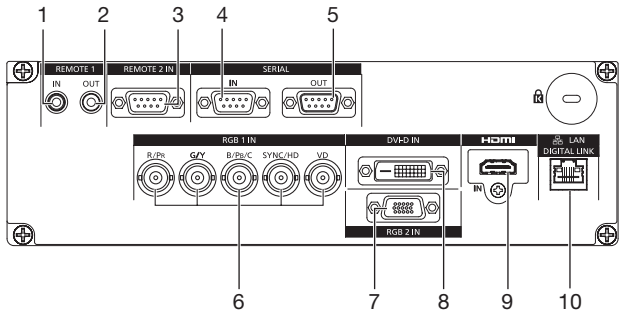

1 REMOTE 1 INPUT
2 REMOTE 1 OUTPUT
3 REMOTE 2 INPUT
4 SERIAL/MULTI PROJECTOR SYNC INPUT
5 SERIAL/MULTI PROJECTOR SYNC OUTPUT
6 RGB 1 INPUT
7 RGB 2 INPUT
8 DVI-D INPUT
9 HDMI INPUT
10 LAN/DIGITAL LINK TERMINAL

DLP™ Projector

PT-RW930B/RW930W/RW930LB/RW930LW

Standard setting-up position (If using other than the ET-DLE030)

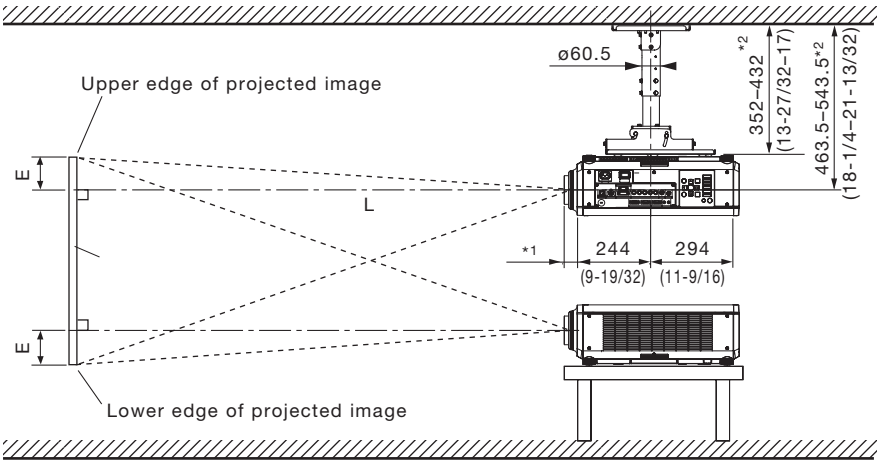

***1 When the lens protrudes to the maximum.**
84 mm (3-5/16 in) with the ET-DLE085
43 mm (1-11/16 in) with the supplied lens/ET-DLE170
44 mm (1-23/32 in) with the ET-DLE150
45 mm (1-25/32 in) with the ET-DLE250
51mm (2 in) with the ET-DLE350
95 mm (3-3/4 in) with the ET-DLE450
27 mm (1-1/16 in) with the ET-DLE055

***2 Adjustable in 40 mm (1-9/16 in) steps.**

unit : mm (inch)

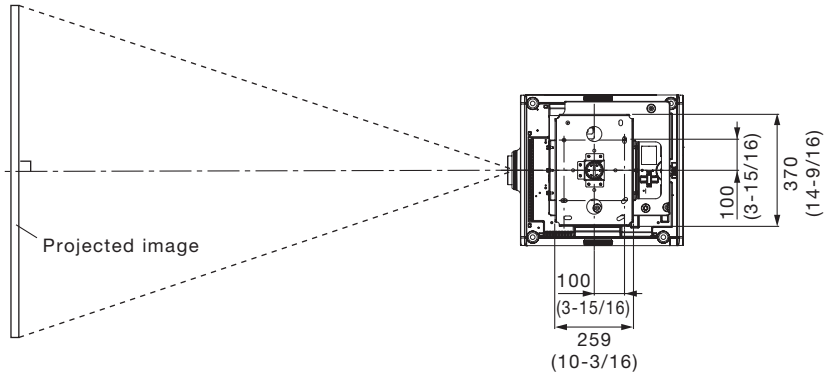

NOTE:

Illustrations show the projector installed using optional ceiling mount bracket ET-PKD120H, optional bracket assembly ET-PKD130B and an optional lens.

This illustration is not drawn to scale.

Caution:

- All construction work should be done by a qualified technician.
- When mounting to the ceiling, use the special mounting bracket. Furthermore, in order to prevent it from falling down from the ceiling, use the supplied wire on the mounting bracket.

Projection distance for 16:10 aspect ratio screen (If using other than the ET-DLE030)

Unit: meters

Screen size (diagonal)		Distance to screen (L)													Height from the edge of screen to center of lens (H)	
		Zoom												Fixed-focus		
		ET-DLE085 Zoom lens		ET-DLE150 Zoom lens		*Supplied lens/ET-DLE170 Zoom lens*		ET-DLE250 Zoom lens		ET-DLE350 Zoom lens		ET-DLE450 Zoom lens		ET-DLE055 Fixed-focus lens	Zoom lenses	Fixed-focus lens
[m]	[in]	min.	max.	min.	max.	*min.*	*max.*	min.	max.	min.	max.	min.	max.			
1.27 /	50	0.87	1.09	1.45	2.12	*1.91*	*2.70*	2.54	4.06	4.00	6.11	5.96	9.59	0.87	-0.07 – -0.44	0.34
1.52 /	60	1.05	1.32	1.75	2.55	*2.31*	*3.26*	3.07	4.89	4.83	7.36	7.21	11.57	1.06	-0.08 – -0.53	0.40
1.78 /	70	1.23	1.54	2.05	2.98	*2.71*	*3.81*	3.59	5.72	5.65	8.61	8.46	13.55	1.24	-0.09 – -0.62	0.47
2.03 /	80	1.42	1.77	2.35	3.42	*3.11*	*4.37*	4.12	6.55	6.48	9.86	9.71	15.53	1.42	-0.11 – -0.71	0.54
2.29 /	90	1.60	2.00	2.65	3.85	*3.50*	*4.92*	4.64	7.38	7.31	11.11	10.96	17.51	1.61	-0.12 – -0.80	0.61
2.54 /	100	1.78	2.22	2.95	4.28	*3.90*	*5.48*	5.16	8.20	8.13	12.36	12.21	19.49	1.79	-0.14 – -0.89	0.67
3.05 /	120	2.15	2.68	3.55	5.15	*4.70*	*6.59*	6.21	9.86	9.79	14.86	14.72	23.45	2.16	-0.16 – -1.07	0.81
3.81 /	150	2.70	3.36	4.45	6.45	*5.89*	*8.25*	7.79	12.35	12.27	18.61	18.47	29.38	2.71	-0.20 – -1.33	1.01
5.08 /	200	3.61	4.49	5.95	8.61	*7.88*	*11.03*	10.41	16.49	16.40	24.85	24.73	39.28	3.63	-0.27 – -1.78	1.35
6.35 /	250	4.53	5.62	7.45	10.78	*9.86*	*13.81*	13.03	20.63	20.53	31.10	30.99	49.17	–	-0.34 – -2.22	–
7.62 /	300	5.45	6.76	8.95	12.95	*11.85*	*16.58*	15.65	24.77	24.67	37.34	37.25	59.06	–	-0.40 – -2.65	–
10.16 /	400	7.28	9.02	11.96	17.28	*15.83*	*22.13*	20.90	33.05	32.94	49.84	49.76	78.85	–	-0.54 – -3.55	–
12.70 /	500	9.11	11.29	14.96	21.61	*19.80*	*27.68*	26.14	41.34	41.20	62.33	62.28	98.64	–	-0.67 – -4.44	–
15.24 /	600	10.94	13.55	17.96	25.94	*23.78*	*33.23*	31.39	49.62	49.47	74.82	74.80	118.42	–	-0.81 – -5.33	–

Unit: feet

Screen size (diagonal)		Distance to screen (L)													Height from the edge of screen to center of lens (H)	
		Zoom												Fixed-focus		
		ET-DLE085 Zoom lens		ET-DLE150 Zoom lens		*Supplied lens/ET-DLE170 Zoom lens*		ET-DLE250 Zoom lens		ET-DLE350 Zoom lens		ET-DLE450 Zoom lens		ET-DLE055 Fixed-focus lens	Zoom lenses	Fixed-focus lens
[m]	[in]	min.	max.	min.	max.	*min.*	*max.*	min.	max.	min.	max.	min.	max.			
1.27 /	50	2.9	3.6	4.8	7.0	*6.3*	*8.9*	8.3	13.3	13.1	20.0	19.6	31.5	2.9	-0.2 – 1.5	1.1
1.52 /	60	3.4	4.3	5.7	8.4	*7.6*	*10.7*	10.1	16.0	15.8	24.1	23.7	38.0	3.5	-0.3 – 1.7	1.3
1.78 /	70	4.0	5.1	6.7	9.8	*8.9*	*12.5*	11.8	18.8	18.5	28.2	27.8	44.5	4.1	-0.3 – 2.0	1.5
2.03 /	80	4.7	5.8	7.7	11.2	*10.2*	*14.3*	13.5	21.5	21.3	32.3	31.9	51.0	4.7	-0.4 – 2.3	1.8
2.29 /	90	5.2	6.6	8.7	12.6	*11.5*	*16.1*	15.2	24.2	24.0	36.5	36.0	57.4	5.3	-0.4 – 2.6	2.0
2.54 /	100	5.8	7.3	9.7	14.0	*12.8*	*18.0*	16.9	26.9	26.7	40.6	40.1	63.9	5.9	-0.4 – 2.9	2.2
3.05 /	120	7.1	8.8	11.6	16.9	*15.4*	*21.6*	20.4	32.3	32.1	48.8	48.3	76.9	7.1	-0.5 – 3.5	2.7
3.81 /	150	8.9	11.0	14.6	21.2	*19.3*	*27.1*	25.6	40.5	40.3	61.1	60.6	96.4	8.9	-0.7 – 4.4	3.3
5.08 /	200	11.8	14.7	19.5	28.2	*25.9*	*36.2*	34.2	54.1	53.8	81.5	81.1	128.9	11.9	-0.9 – 5.8	4.4
6.35 /	250	14.9	18.4	24.4	35.4	*32.3*	*45.3*	42.7	67.7	67.4	102.0	101.7	161.3	–	-1.1 – 7.3	–
7.62 /	300	17.9	22.2	29.4	42.5	*38.9*	*54.4*	51.3	81.3	80.9	122.5	122.2	193.8	–	-1.3 – 8.7	–
10.16 /	400	23.9	29.6	39.2	56.7	*51.9*	*72.6*	68.6	108.4	108.1	163.5	163.3	258.7	–	-1.8 – 11.7	–
12.70 /	500	29.9	37.0	49.1	70.9	*65.0*	*90.8*	85.8	135.6	135.2	204.5	204.3	323.6	–	-2.2 – 14.6	–
15.24 /	600	35.9	44.5	58.9	85.1	*78.0*	*109.0*	103.0	162.8	162.3	245.5	245.4	388.5	–	-2.7 – 17.5	–

- **The value for L (distance to screen) varies slightly within ±5% depending on the zoom lens characteristics.**
- **The zoom lens characteristics may cause slight image distortion.**
- **When vertical keystone correction is used, the image is corrected in the direction that reduces its projected size.**
- **The brightness varies depending on the zoom setting.**

Note: When the ET-DLE055 is mounted, the optical lens shift function cannot be used.

DLP™ Projector

PT-RW930B/RW930W/RW930LB/RW930LW

Projection distance for 16:9 aspect ratio screen (If using other than the ET-DLE030)

Unit: meters

Screen size (diagonal)		Distance to screen (L)													Height from the edge of screen to center of lens (H)	
		Zoom												Fixed-focus		
		ET-DLE085 Zoom lens		ET-DLE150 Zoom lens		*Supplied lens/ET-DLE170 Zoom lens*		ET-DLE250 Zoom lens		ET-DLE350 Zoom lens		ET-DLE450 Zoom lens		ET-DLE055 Fixed-focus lens	Zoom lenses	Fixed-focus lens
[m]	[in]	min.	max.	min.	max.	*min.*	*max.*	min.	max.	min.	max.	min.	max.			
1.27	50	0.89	1.12	1.49	2.18	*1.97*	*2.78*	2.62	4.18	4.11	6.29	6.13	9.87	0.90	-0.14 – -0.46	0.31
1.52	60	1.08	1.35	1.80	2.62	*2.38*	*3.35*	3.15	5.03	4.96	7.57	7.42	11.90	1.09	-0.16 – -0.55	0.37
1.78	70	1.27	1.59	2.11	3.07	*2.79*	*3.92*	3.69	5.88	5.81	8.85	8.70	13.94	1.27	-0.19 – -0.64	0.44
2.03	80	1.46	1.82	2.42	3.51	*3.19*	*4.49*	4.23	6.73	6.66	10.14	9.99	15.97	1.46	-0.22 – -0.73	0.50
2.29	90	1.65	2.05	2.72	3.96	*3.60*	*5.06*	4.77	7.58	7.51	11.42	11.28	18.00	1.65	-0.25 – -0.82	0.56
2.54	100	1.83	2.29	3.03	4.40	*4.01*	*5.63*	5.31	8.43	8.36	12.71	12.56	20.04	1.84	-0.27 – -0.91	0.62
3.05	120	2.21	2.75	3.65	5.29	*4.83*	*6.77*	6.39	10.14	10.06	15.27	15.14	24.11	2.22	-0.33 – -1.10	0.75
3.81	150	2.78	3.45	4.58	6.63	*6.05*	*8.49*	8.01	12.69	12.61	19.13	18.99	30.21	2.79	-0.41 – -1.37	0.93
5.08	200	3.72	4.61	6.12	8.86	*8.10*	*11.34*	10.70	16.95	16.86	25.55	25.43	40.38	3.73	-0.55 – -1.83	1.25
6.35	250	4.66	5.78	7.66	11.08	*10.14*	*14.19*	13.40	21.21	21.11	31.97	31.86	50.54	–	-0.69 – -2.28	–
7.62	300	5.60	6.94	9.21	13.31	*12.18*	*17.04*	16.09	25.46	25.36	38.39	38.29	60.71	–	-0.82 – -2.74	–
10.16	400	7.48	9.27	12.29	17.76	*16.27*	*22.75*	21.48	33.98	33.86	51.23	51.16	81.05	–	-1.10 – -3.65	–
12.70	500	9.36	11.60	15.38	22.21	*20.35*	*28.45*	26.87	42.49	42.35	64.07	64.02	101.39	–	-1.37 – -4.57	–
15.24	600	11.24	13.93	18.46	26.66	*24.44*	*34.16*	32.26	51.00	50.85	76.91	76.88	121.73	–	-1.64 – -5.48	–

Unit: feet

Screen size (diagonal)		Distance to screen (L)													Height from the edge of screen to center of lens (H)	
		Zoom												Fixed-focus		
		ET-DLE085 Zoom lens		ET-DLE150 Zoom lens		*Supplied lens/ET-DLE170 Zoom lens*		ET-DLE250 Zoom lens		ET-DLE350 Zoom lens		ET-DLE450 Zoom lens		ET-DLE055 Fixed-focus lens	Zoom lenses	Fixed-focus lens
[m]	[in]	min.	max.	min.	max.	*min.*	*max.*	min.	max.	min.	max.	min.	max.			
1.27	50	2.9	3.7	4.9	7.2	*6.5*	*9.1*	8.6	13.7	13.5	20.6	20.1	32.4	3.0	-0.4 – 1.5	1.0
1.52	60	3.5	4.4	5.9	8.6	*7.8*	*11.0*	10.3	16.5	16.3	24.8	24.3	39.0	3.6	-0.5 – 1.8	1.2
1.78	70	4.2	5.2	6.9	10.1	*9.2*	*12.9*	12.1	19.3	19.1	29.0	28.5	45.7	4.2	-0.6 – 2.1	1.4
2.03	80	4.8	6.0	7.9	11.5	*10.5*	*14.7*	13.9	22.1	21.9	33.3	32.8	52.4	4.8	-0.7 – 2.4	1.6
2.29	90	5.4	6.7	8.9	13.0	*11.8*	*16.6*	15.6	24.9	24.6	37.5	37.0	59.1	5.4	-0.8 – 2.7	1.8
2.54	100	6.0	7.5	9.9	14.4	*13.2*	*18.5*	17.4	27.7	27.4	41.7	41.2	65.7	6.0	-0.9 – 3.0	2.0
3.05	120	7.3	9.0	12.0	17.4	*15.8*	*22.2*	21.0	33.3	33.0	50.1	49.7	79.1	7.3	-1.1 – 3.6	2.5
3.81	150	9.1	11.3	15.0	21.8	*19.8*	*27.9*	26.3	41.6	41.4	62.8	62.3	99.1	9.2	-1.3 – 4.5	3.1
5.08	200	12.2	15.1	20.1	29.1	*26.6*	*37.2*	35.1	55.6	55.3	83.8	83.4	132.5	12.2	-1.8 – 6.0	4.1
6.35	250	15.3	19.0	25.1	36.4	*33.3*	*46.6*	44.0	69.6	69.3	104.9	104.5	165.8	–	-2.2 – 7.5	–
7.62	300	18.4	22.8	30.2	43.7	*40.0*	*55.9*	52.8	83.5	83.2	126.0	125.6	199.2	–	-2.7 – 9.0	–
10.16	400	24.5	30.4	40.3	58.3	*53.4*	*74.6*	70.5	111.5	111.1	168.1	167.8	265.9	–	-3.6 – 12.0	–
12.70	500	30.7	38.1	50.5	72.9	*66.8*	*93.3*	88.2	139.4	138.9	210.2	210.0	332.6	–	-4.5 – 15.0	–
15.24	600	36.9	45.7	60.6	87.5	*80.2*	*112.1*	105.8	167.3	166.8	252.3	252.2	399.4	–	-5.4 – 18.0	–

- **The value for L (distance to screen) varies slightly within ±5% depending on the zoom lens characteristics.**
- **The zoom lens characteristics may cause slight image distortion.**
- **When vertical keystone correction is used, the image is corrected in the direction that reduces its projected size.**
- **The brightness varies depending on the zoom setting.**

Note: When the ET-DLE055 is mounted, the optical lens shift function cannot be used.

DLP™ Projector

PT-RW930B/RW930W/RW930LB/RW930LW

Projection distance for 4:3 aspect ratio screen (If using other than the ET-DLE030)

Unit: meters

Screen size (diagonal)		Distance to screen (L)													Height from the edge of screen to center of lens (H)	
		Zoom												Fixed-focus		
		ET-DLE085 Zoom lens		ET-DLE150 Zoom lens		*Supplied lens/ET-DLE170 Zoom lens*		ET-DLE250 Zoom lens		ET-DLE350 Zoom lens		ET-DLE450 Zoom lens		ET-DLE055 Fixed-focus lens	Zoom lenses	Fixed-focus lens
[m]	[in]	min.	max.	min.	max.	*min.*	*max.*	min.	max.	min.	max.	min.	max.			
1.27 /	50	0.99	1.24	1.65	2.40	*2.18*	*3.07*	2.89	4.61	4.54	6.94	6.78	10.90	0.99	-0.08 – 0.50	0.38
1.52 /	60	1.20	1.50	1.99	2.89	*2.63*	*3.70*	3.48	5.55	5.48	8.35	8.20	13.14	1.20	-0.09 – 0.60	0.46
1.78 /	70	1.40	1.75	2.33	3.38	*3.08*	*4.33*	4.08	6.48	6.42	9.76	9.61	15.38	1.41	-0.11 – 0.70	0.53
2.03 /	80	1.61	2.01	2.67	3.87	*3.53*	*4.95*	4.67	7.42	7.35	11.18	11.03	17.62	1.62	-0.12 – 0.81	0.61
2.29 /	90	1.82	2.26	3.00	4.36	*3.98*	*5.58*	5.26	8.36	8.29	12.59	12.45	19.86	1.82	-0.14 – 0.91	0.69
2.54 /	100	2.03	2.52	3.34	4.85	*4.42*	*6.21*	5.86	9.30	9.22	14.01	13.87	22.10	2.03	-0.15 – 1.01	0.76
3.05 /	120	2.44	3.03	4.02	5.83	*5.32*	*7.47*	7.04	11.17	11.09	16.83	16.70	26.58	2.45	-0.18 – 1.21	0.91
3.81 /	150	3.06	3.80	5.04	7.31	*6.67*	*9.35*	8.82	13.98	13.90	21.08	20.95	33.30	3.07	-0.23 – 1.51	1.14
5.08 /	200	4.10	5.09	6.74	9.76	*8.92*	*12.49*	11.79	18.67	18.58	28.15	28.03	44.49	4.11	-0.31 – 2.01	1.52
6.35 /	250	5.13	6.37	8.44	12.21	*11.17*	*15.64*	14.76	23.36	23.26	35.22	35.12	55.69	–	-0.38 – 2.52	–
7.62 /	300	6.17	7.65	10.14	14.66	*13.42*	*18.78*	17.73	28.05	27.94	42.29	42.20	66.89	–	-0.46 – 3.02	–
10.16 /	400	8.24	10.22	13.54	19.56	*17.92*	*25.06*	23.67	37.42	37.30	56.43	56.37	89.29	–	-0.61 – 4.02	–
12.70 /	500	10.31	12.78	16.94	24.47	*22.42*	*31.34*	29.60	46.80	46.65	70.57	70.53	111.68	–	-0.76 – 5.03	–
15.24 /	600	12.39	15.35	20.34	29.37	*26.92*	*37.63*	35.54	56.17	56.01	84.71	84.70	134.08	–	-0.91 – 6.04	–

Unit: feet

Screen size (diagonal)		Distance to screen (L)													Height from the edge of screen to center of lens (H)	
		Zoom												Fixed-focus		
		ET-DLE085 Zoom lens		ET-DLE150 Zoom lens		*Supplied lens/ET-DLE170 Zoom lens*		ET-DLE250 Zoom lens		ET-DLE350 Zoom lens		ET-DLE450 Zoom lens		ET-DLE055 Fixed-focus lens	Zoom lenses	Fixed-focus lens
[m]	[in]	min.	max.	min.	max.	*min.*	*max.*	min.	max.	min.	max.	min.	max.			
1.27 /	50	3.2	4.1	5.4	7.9	*7.2*	*10.1*	9.5	15.1	14.9	22.8	22.2	35.8	3.2	-0.2 – 1.7	1.2
1.52 /	60	3.9	4.9	6.5	9.5	*8.6*	*12.1*	11.4	18.2	18.0	27.4	26.9	43.1	3.9	-0.3 – 2.0	1.5
1.78 /	70	4.6	5.7	7.6	11.1	*10.1*	*14.2*	13.4	21.3	21.1	32.0	31.5	50.5	4.6	-0.4 – 2.3	1.7
2.03 /	80	5.3	6.6	8.8	12.7	*11.6*	*16.2*	15.3	24.3	24.1	36.7	36.2	57.8	5.3	-0.4 – 2.6	2.0
2.29 /	90	6.0	7.4	9.8	14.3	*13.1*	*18.3*	17.3	27.4	27.2	41.3	40.8	65.2	6.0	-0.4 – 3.0	2.3
2.54 /	100	6.7	8.3	11.0	15.9	*14.5*	*20.4*	19.2	30.5	30.2	46.0	45.5	72.5	6.7	-0.5 – 3.3	2.5
3.05 /	120	8.0	9.9	13.2	19.1	*17.5*	*24.5*	23.1	36.6	36.4	55.2	54.8	87.2	8.0	-0.6 – 4.0	3.0
3.81 /	150	10.0	12.5	16.5	24.0	*21.9*	*30.7*	28.9	45.9	45.6	69.2	68.7	109.3	10.1	-0.8 – 5.0	3.7
5.08 /	200	13.5	16.7	22.1	32.0	*29.3*	*41.0*	38.7	61.3	61.0	92.4	92.0	146.0	13.5	-1.0 – 6.6	5.0
6.35 /	250	16.8	20.9	27.7	40.1	*36.6*	*51.3*	48.4	76.6	76.3	115.6	115.2	182.7	–	-1.3 – 8.3	–
7.62 /	300	20.2	25.1	33.3	48.1	*44.0*	*61.6*	58.2	92.0	91.7	138.7	138.5	219.5	–	-1.5 – 9.9	–
10.16 /	400	27.0	33.5	44.4	64.2	*58.8*	*82.2*	77.7	122.8	122.4	185.1	184.9	292.9	–	-2.0 – 13.2	–
12.70 /	500	33.8	41.9	55.6	80.3	*73.6*	*102.8*	97.1	153.5	153.1	231.5	231.4	366.4	–	-2.5 – 16.5	–
15.24 /	600	40.6	50.4	66.7	96.4	*88.3*	*123.5*	116.6	184.3	183.8	277.9	277.9	439.9	–	-3.0 – 19.8	–

- **The value for L (distance to screen) varies slightly within ±5% depending on the zoom lens characteristics.**
- **The zoom lens characteristics may cause slight image distortion.**
- **When vertical keystone correction is used, the image is corrected in the direction that reduces its projected size.**
- **The brightness varies depending on the zoom setting.**

Note: When the ET-DLE055 is mounted, the optical lens shift function cannot be used.

DLP™ Projector

PT-RW930B/RW930W/RW930LB/RW930LW

Standard setting-up position (If using the ET-DLE030)

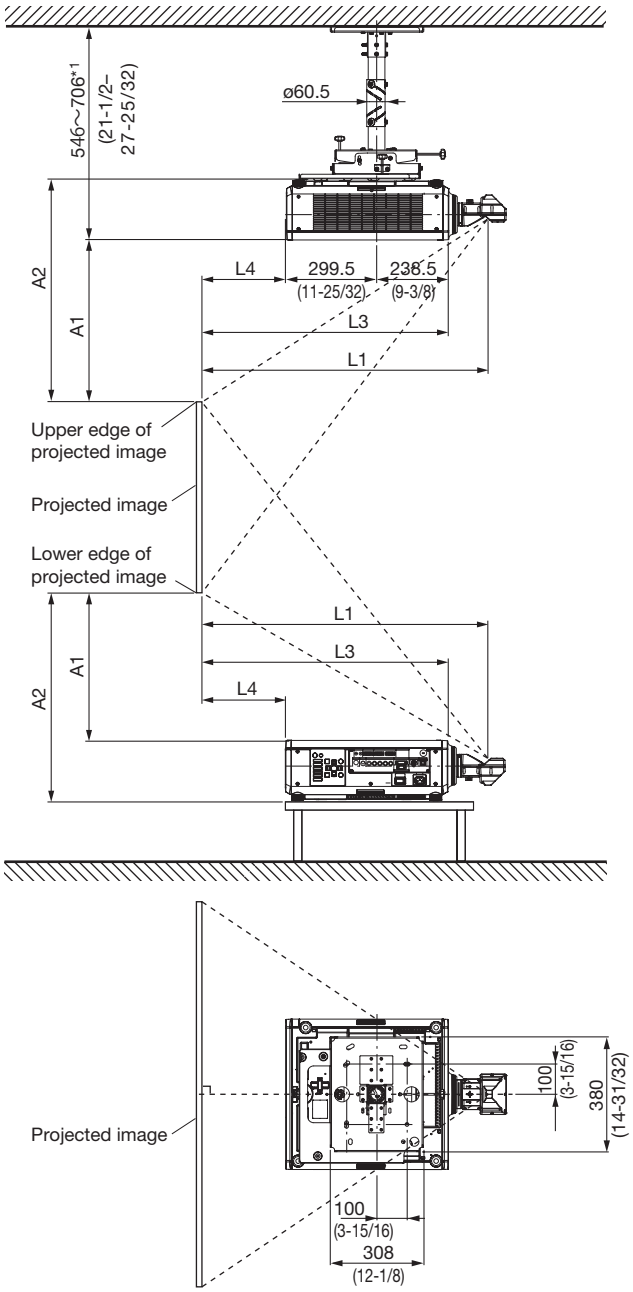

NOTE:

Illustrations show the projector installed using optional ceiling mount bracket ET-PKD130H, optional bracket assembly ET-PKD130B and an optional lens.

This illustration is not drawn to scale.

***1 Continuous height adjustment possible.**

unit : mm (inch)

NOTE:

Illustrations show the projector installed using optional ceiling mount bracket ET-PKD130H, optional bracket assembly ET-PKD130B and an optional lens.

This illustration is not drawn to scale.

Caution:

- All construction work should be done by a qualified technician.
- When mounting to the ceiling, use the special mounting bracket. Furthermore, in order to prevent it from falling down from the ceiling, use the supplied wire on the mounting bracket.

DLP™ Projector

PT-RW930B/RW930W/RW930LB/RW930LW

Projection distance for 16:10 aspect ratio screen (If using the ET-DLE030)

Unit : meters

Throw ratio				0.40:1	Ultra-short focal length lens ET-DLE030 Close-up system dimensions			
Diagonal image size (Inches)	Diagonal image size (m)	Height (SH)	Width (SW)	Projection distance (From mirror reflective surface to screen) (L1)	From front of set to screen (L3)	From rear of set to screen (L4)	From top of set to bottom edge of screen (A1)	From bottom of set to bottom edge of screen (A2)
100	2.54	1.35	2.15	0.86	0.69	0.16	0.59	0.79
120	3.05	1.62	2.59	1.03	0.86	0.33	0.72	0.92
150	3.81	2.02	3.23	1.29	1.12	0.58	0.92	1.12
200	5.08	2.69	4.31	1.71	1.55	1.01	1.25	1.45
250	6.35	3.37	5.39	2.14	1.98	1.44	1.58	1.78
300	7.62	4.04	6.46	2.57	2.40	1.86	1.91	2.11
350	8.89	4.71	7.54	3.00	2.83	2.29	2.24	2.44

Unit : feet

Throw ratio				0.40:1	Ultra-short focal length lens ET-DLE030 Close-up system dimensions			
Diagonal image size (Inches)	Diagonal image size (m)	Height (SH)	Width (SW)	Projection distance (From mirror reflective surface to screen) (L1)	From front of set to screen (L3)	From rear of set to screen (L4)	From top of set to bottom edge of screen (A1)	From bottom of set to bottom edge of screen (A2)
100	2.54	4.4	7.1	2.8	2.3	0.5	1.9	2.6
120	3.05	5.3	8.5	3.4	2.8	1.1	2.4	3.0
150	3.81	6.6	10.6	4.2	3.7	1.9	3.0	3.7
200	5.08	8.8	14.1	5.6	5.1	3.3	4.1	4.8
250	6.35	11.0	17.7	7.0	6.5	4.7	5.2	5.8
300	7.62	13.3	21.2	8.4	7.9	6.1	6.3	6.9
350	8.89	15.5	24.7	9.8	9.3	7.5	7.3	8.0

* The value for L1 may contain an error of within ±5%.
* When using vertical keystone correction, the images will be corrected so that they will tend to be smaller than the specified screen size.
* This measurement is not the distance between the rear of the projector and the wall, but is instead the distance between the rear of the projector and the screen surface. Leave at least 500 mm of space between the rear of the projector and the wall and any other objects in order to provide adequate ventilation space. If setting up the projector in a closed room, be sure to provide separate air conditioning and ventilation equipment. If there is insufficient ventilation in the room, radiated heat may build up and cause the protection circuit of the projector to operate.

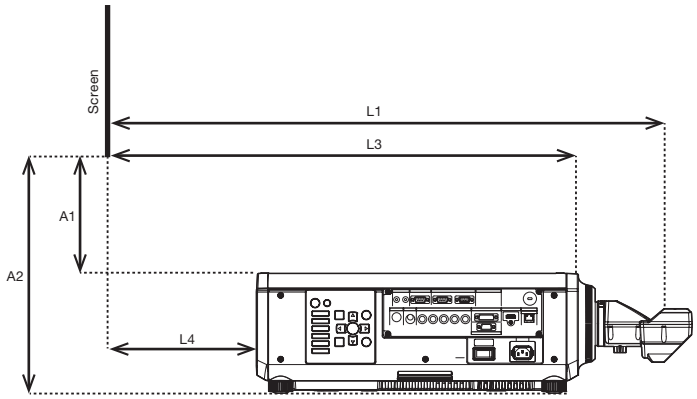

L1: Projection distance
(from screen to mirror reflective surface)
L3: From screen to front of set
L4: From screen to rear of set
A1: From bottom edge of screen to top of set
A2: From bottom edge of screen to bottom of set

Projection Distance Calculation Table

Screen aspect ratio 16:10

Projection distance calculation formula

L1 (m) = 0.3205 x Diagonal image size + 0.0047

Calculation formula for distance from top of set to bottom edge of screen

A1 (m) = 0.1977 x Diagonal image size - 0.07210

Projection distance for 16:9 aspect ratio screen (If using the ET-DLE030)

Unit : meters

Throw ratio				0.40:1	Ultra-short focal length lens ET-DLE030 Close-up system dimensions			
Diagonal image size (Inches)	Diagonal image size (m)	Height (SH)	Width (SW)	Projection distance (From mirror reflective surface to screen) (L1)	From front of set to screen (L3)	From rear of set to screen (L4)	From top of set to bottom edge of screen (A1)	From bottom of set to bottom edge of screen (A2)
100	2.54	1.25	2.21	0.88	0.72	0.18	0.67	0.87
120	3.05	1.49	2.66	1.06	0.89	0.35	0.82	1.02
150	3.81	1.87	3.32	1.32	1.16	0.62	1.05	1.25
200	5.08	2.49	4.43	1.76	1.60	1.06	1.42	1.62
250	6.35	3.11	5.54	2.20	2.03	1.50	1.79	1.99
300	7.62	3.74	6.64	2.64	2.47	1.94	2.17	2.37
350	8.89	4.36	7.75	3.08	2.91	2.38	2.54	2.74

Unit : feet

Throw ratio				0.40:1	Ultra-short focal length lens ET-DLE030 Close-up system dimensions			
Diagonal image size (Inches)	Diagonal image size (m)	Height (SH)	Width (SW)	Projection distance (From mirror reflective surface to screen) (L1)	From front of set to screen (L3)	From rear of set to screen (L4)	From top of set to bottom edge of screen (A1)	From bottom of set to bottom edge of screen (A2)
100	2.54	4.1	7.3	2.9	2.4	0.6	2.2	2.9
120	3.05	4.9	8.7	3.5	2.9	1.1	2.7	3.3
150	3.81	6.1	10.9	4.3	3.8	2.0	3.4	4.1
200	5.08	8.2	14.5	5.8	5.2	3.5	4.7	5.3
250	6.35	10.2	18.2	7.2	6.7	4.9	5.9	6.5
300	7.62	12.3	21.8	8.7	8.1	6.4	7.1	7.8
350	8.89	14.3	25.4	10.1	9.5	7.8	8.3	9.0

* The value for L1 may contain an error of within ±5%.
* When using vertical keystone correction, the images will be corrected so that they will tend to be smaller than the specified screen size.
* This measurement is not the distance between the rear of the projector and the wall, but is instead the distance between the rear of the projector and the screen surface. Leave at least 500 mm of space between the rear of the projector and the wall and any other objects in order to provide adequate ventilation space. If setting up the projector in a closed room, be sure to provide separate air conditioning and ventilation equipment. If there is insufficient ventilation in the room, radiated heat may build up and cause the protection circuit of the projector to operate.

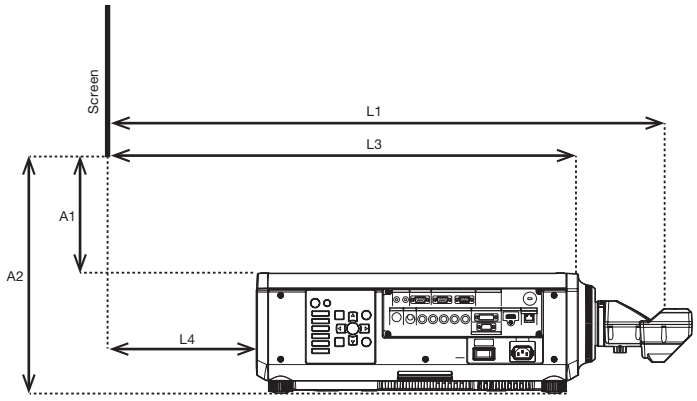

L1: Projection distance
(from screen to mirror reflective surface)
L3: From screen to front of set
L4: From screen to rear of set
A1: From bottom edge of screen to top of set
A2: From bottom edge of screen to bottom of set

Projection Distance Calculation Table

Screen aspect ratio 16:9

Projection distance calculation formula

L1 (m) = 0.3294 x Diagonal image size + 0.0047

Calculation formula for distance from top of set to bottom edge of screen

A1 (m) = 0.2304 x Diagonal image size - 0.07210

DLP™ Projector

PT-RW930B/RW930W/RW930LB/RW930LW

Projection distance for 4:3 aspect ratio screen (If using the ET-DLE030)

Unit : meters

Throw ratio				0.48:1	Ultra-short focal length lens ET-DLE030 Close-up system dimensions			
Diagonal image size (Inches)	Diagonal image size (m)	Height (SH)	Width (SW)	Projection distance (From mirror reflective surface to screen) (L1)	From front of set to screen (L3)	From rear of set to screen (L4)	From top of set to bottom edge of screen (A1)	From bottom of set to bottom edge of screen (A2)
100	2.54	1.52	2.03	0.97	0.81	0.27	0.67	0.87
120	3.05	1.83	2.44	1.17	1.00	0.46	0.82	1.02
150	3.81	2.29	3.05	1.46	1.29	0.75	1.05	1.25
200	5.08	3.05	4.06	1.94	1.77	1.24	1.42	1.62
250	6.35	3.81	5.08	2.42	2.26	1.72	1.79	1.99
300	7.62	4.57	6.10	2.91	2.74	2.20	2.17	2.37
350	8.89	5.33	7.11	3.39	3.22	2.69	2.54	2.74

Unit : feet

Throw ratio				0.48:1	Ultra-short focal length lens ET-DLE030 Close-up system dimensions			
Diagonal image size (Inches)	Diagonal image size (m)	Height (SH)	Width (SW)	Projection distance (From mirror reflective surface to screen) (L1)	From front of set to screen (L3)	From rear of set to screen (L4)	From top of set to bottom edge of screen (A1)	From bottom of set to bottom edge of screen (A2)
100	2.54	5.0	6.7	3.2	2.7	0.9	2.2	2.9
120	3.05	6.0	8.0	3.8	3.3	1.5	2.7	3.3
150	3.81	7.5	10.0	4.8	4.2	2.5	3.4	4.1
200	5.08	10.0	13.3	6.4	5.8	4.1	4.7	5.3
250	6.35	12.5	16.7	7.9	7.4	5.6	5.9	6.5
300	7.62	15.0	20.0	9.5	9.0	7.2	7.1	7.8
350	8.89	17.5	23.3	11.1	10.6	8.8	8.3	9.0

* The value for L1 may contain an error of within ±5%.
* When using vertical keystone correction, the images will be corrected so that they will tend to be smaller than the specified screen size.
* This measurement is not the distance between the rear of the projector and the wall, but is instead the distance between the rear of the projector and the screen surface. Leave at least 500 mm of space between the rear of the projector and the wall and any other objects in order to provide adequate ventilation space. If setting up the projector in a closed room, be sure to provide separate air conditioning and ventilation equipment. If there is insufficient ventilation in the room, radiated heat may build up and cause the protection circuit of the projector to operate.

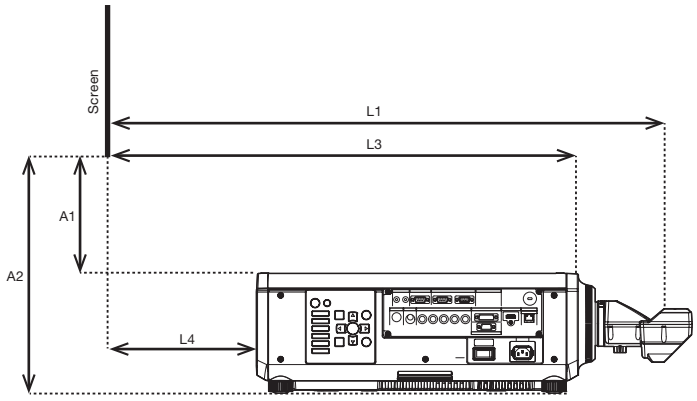

L1: Projection distance
(from screen to mirror reflective surface)
L3: From screen to front of set
L4: From screen to rear of set
A1: From bottom edge of screen to top of set
A2: From bottom edge of screen to bottom of set

Projection Distance Calculation Table

Screen aspect ratio 4:3

Projection distance calculation formula

L1 (m) = 0.3628 x Diagonal image size + 0.0047

Calculation formula for distance from top of set to bottom edge of screen

A1 (m) = 0.2238 x Diagonal image size - 0.07210

Calculation of the projection distance

For a screen size different from the above, use the equation below to calculate the projection distance.

Aspect ratio 16:10

ET-DLE085	minimum	L (m) = (diagonal screen size in inches) × 0.0183 - 0.0471
	maximum	L (m) = (diagonal screen size in inches) × 0.0227 - 0.0442
ET-DLE150	minimum	L (m) = (diagonal screen size in inches) × 0.0300 - 0.0540
	maximum	L (m) = (diagonal screen size in inches) × 0.0433 - 0.0498
Supplied lens/ ET-DLE170	*minimum*	***L (m) = (diagonal screen size in inches) × 0.0398 - 0.0746***
	maximum	***L (m) = (diagonal screen size in inches) × 0.0555 - 0.0725***
ET-DLE250	minimum	L (m) = (diagonal screen size in inches) × 0.0524 - 0.0800
	maximum	L (m) = (diagonal screen size in inches) × 0.0828 - 0.0792
ET-DLE350	minimum	L (m) = (diagonal screen size in inches) × 0.0827 - 0.1351
	maximum	L (m) = (diagonal screen size in inches) × 0.1249 - 0.1346
ET-DLE450	minimum	L (m) = (diagonal screen size in inches) × 0.1252 - 0.3017
	maximum	L (m) = (diagonal screen size in inches) × 0.1979 - 0.2991
ET-DLE030	(fixed focus)	L1 (m) = (diagonal screen size in inches) × 0.0085 - 0.0047 L3 (m) = L1-0.166 L4 (m) = L1-0.704
ET-DLE055	(fixed focus)	L (m) = (diagonal screen size in inches) × 0.0184 - 0.0476

Aspect ratio 16:9

ET-DLE085	minimum	L (m) = (diagonal screen size in inches) × 0.0188 - 0.0471
	maximum	L (m) = (diagonal screen size in inches) × 0.0233 - 0.0442
ET-DLE150	minimum	L (m) = (diagonal screen size in inches) × 0.0309 - 0.0540
	maximum	L (m) = (diagonal screen size in inches) × 0.0445 - 0.0498
Supplied lens/ ET-DLE170	*minimum*	***L (m) = (diagonal screen size in inches) × 0.0409 - 0.0746***
	maximum	***L (m) = (diagonal screen size in inches) × 0.0571 - 0.0725***
ET-DLE250	minimum	L (m) = (diagonal screen size in inches) × 0.0539 - 0.0800
	maximum	L (m) = (diagonal screen size in inches) × 0.0851 - 0.0792
ET-DLE350	minimum	L (m) = (diagonal screen size in inches) × 0.0850 - 0.1351
	maximum	L (m) = (diagonal screen size in inches) × 0.1284 - 0.1346
ET-DLE450	minimum	L (m) = (diagonal screen size in inches) × 0.1286 - 0.3017
	maximum	L (m) = (diagonal screen size in inches) × 0.2034 - 0.2991
ET-DLE030	(fixed focus)	L1 (m) = (diagonal screen size in inches) × 0.0088 - 0.0047 L3 (m) = L1-0.166 L4 (m) = L1-0.704
ET-DLE055	(fixed focus)	L (m) = (diagonal screen size in inches) × 0.0189 - 0.0476

Aspect ratio 4:3

ET-DLE085	minimum	L (m) = (diagonal screen size in inches) × 0.0207 - 0.0471
	maximum	L (m) = (diagonal screen size in inches) × 0.0257 - 0.0442
ET-DLE150	minimum	L (m) = (diagonal screen size in inches) × 0.0340 - 0.0540
	maximum	L (m) = (diagonal screen size in inches) × 0.0490 - 0.0498
Supplied lens/ ET-DLE170	*minimum*	***L (m) = (diagonal screen size in inches) × 0.0450 - 0.0746***
	maximum	***L (m) = (diagonal screen size in inches) × 0.0628 - 0.0725***
ET-DLE250	minimum	L (m) = (diagonal screen size in inches) × 0.0594 - 0.0800
	maximum	L (m) = (diagonal screen size in inches) × 0.0938 - 0.0792
ET-DLE350	minimum	L (m) = (diagonal screen size in inches) × 0.0936 - 0.1351
	maximum	L (m) = (diagonal screen size in inches) × 0.1414 - 0.1346
ET-DLE450	minimum	L (m) = (diagonal screen size in inches) × 0.1417 - 0.3017
	maximum	L (m) = (diagonal screen size in inches) × 0.2240 - 0.2991
ET-DLE030	(fixed focus)	L1 (m) = (diagonal screen size in inches) × 0.0097 - 0.0047 L3 (m) = L1-0.166 L4 (m) = L1-0.704
ET-DLE055	(fixed focus)	L (m) = (diagonal screen size in inches) × 0.0208 - 0.0476

- **Distances calculated with the above equations will include a slight error.**

Formula for calculating possible heights when using the ET-DLE030

If using a screen size which has not been previously mentioned, use the following calculation formulas to obtain the possible setting-up height.

For screen aspect ratio of 16:10
Possible setting-up height A1 (mm) = Projection screen size (inches) x 6.6-74.0
Possible setting-up height A2 (mm) = A1 + 200

For screen aspect ratio of 16:9
Possible setting-up height A1 (mm) = Projection screen size (inches) x 7.5-74.0
Possible setting-up height A2 (mm) = A1 + 200

For screen aspect ratio of 4:3
Possible setting-up height A1 (mm) = Projection screen size (inches) x 7.5-74.0
Possible setting-up height A2 (mm) = A1 + 200

* There may be a small margin of error in the values obtained from the above formulas.

Shift range

Optical axis shift function allows to shift the position of a projected image as shown below.

- **Floor mount**
  (When the lens except the ET-DLE085 is mounted.)

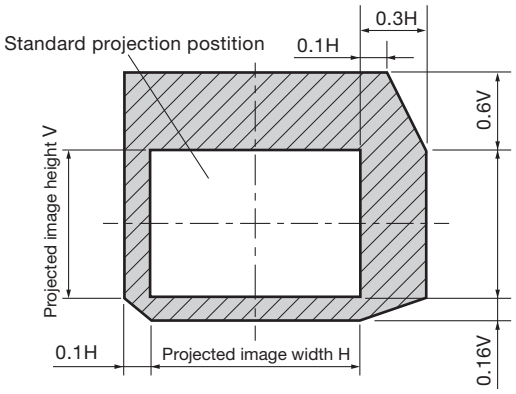

- **Ceiling mount**
  (When the lens except the ET-DLE085 is mounted.)

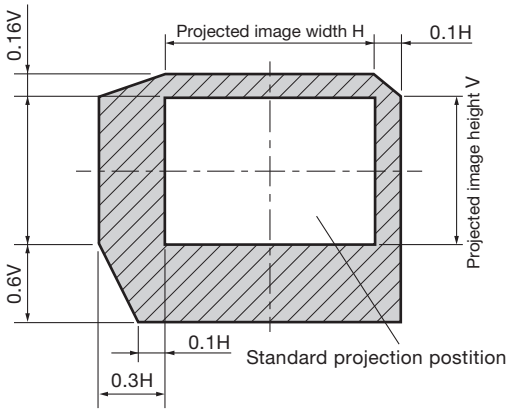

- **Floor mount**
  (When the ET-DLE085 is mounted.)

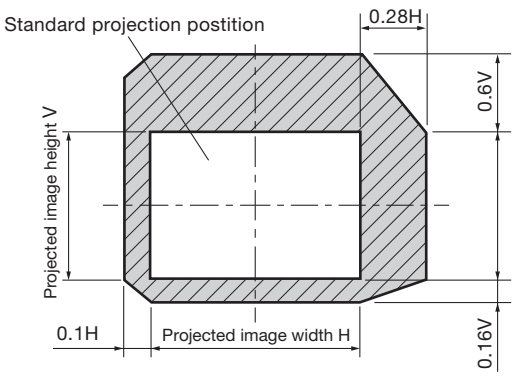

- **Ceiling mount**
  (When the ET-DLE085 is mounted.)

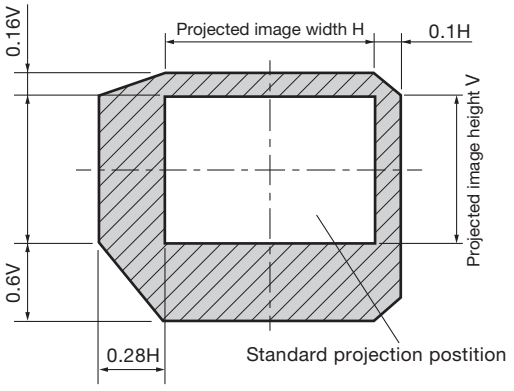

- **The ET-DLE055 has a fixed short-focus lens. Therefore, the lens shift function provided in the main unit cannot be used.**

Installable angle

Install the projector at an angle within the range shown below.

FULL 360-degree projection

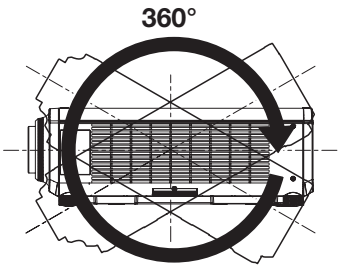

Vertical 360-deg.

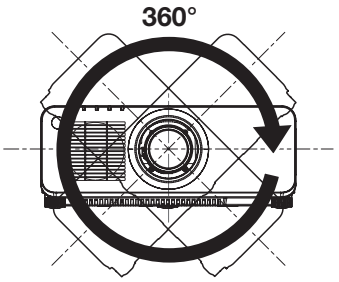

Horizontal 360-deg.

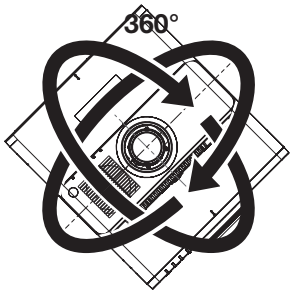

Tilting 360-deg.
(V&H combination)

DLP™ Projector

PT-RW930B/RW930W/RW930LB/RW930LW

List of compatible signals

The following table specifies the video signals compatible with the projector.

- Symbols that indicate formats are as follows.
  ––V : VIDEO, Y/C
  ––R: RGB (analog)
  ––Y: YCBCR/YPBPR (analog)
  ––D: DVI-D
  ––H: HDMI
- Input corresponding to each item in the plug and play column is as follows.
  ––RGB2: RGB2 input
  ––DVI-D: DVI-D input
  ––HDMI/DL: HDMI input, DIGITAL LINK input

Compatible signal	Resolution (Dots)	Scanning freq. H (KHz)	Scanning freq. V (Hz)	Dot clock freq. (MHz)	Format	Plug and Play*1 RGB2	DVD-D EDID1	DVD-D EDID2	DVD-D EDID3	HDMI DL
NTSC/NTSC4.43/PAL-M/PAL60	720 x 480i	15.7	59.9	—	V	—	—	—	—	—
PAL/PAL-N/SECAM	720 x 576i	15.6	50.0	—	V	—	—	—	—	—
480/60i	720 x 480i	15.7	59.9	13.5	R/Y	—	—	—	—	—
576/50i	720 x 576i	15.6	50.0	13.5	R/Y	—	—	—	—	—
480/60i	720(1440) x 480i*2	15.7	59.9	27.0	D/H	—	—	—	—	—
576/50i	720(1440) x 576i*2	15.6	50.0	27.0	D/H	—	—	—	—	—
480/60p	720 x 480	31.5	59.9	27.0	R/Y/D/H	—	✓	—	✓	✓
576/50p	720 x 576	31.3	50.0	27.0	R/Y/D/H	—	✓	—	✓	✓
720/60p	1280 x 720	45.0	60.0	74.3	R/Y/D/H	—	✓	—	✓	✓
720/50p	1280 x 720	37.5	50.0	74.3	R/Y/D/H	—	✓	—	✓	✓
1080/60i	1920 x 1080i	33.8	60.0	74.3	R/Y/D/H	—	✓	—	✓	✓
1080/50i	1920 x 1080i	28.1	50.0	74.3	R/Y/D/H	—	✓	—	✓	✓
1080/24p	1920 x 1080	27.0	24.0	74.3	R/Y/D/H	—	✓	—	✓	✓
1080/24sF	1920 x 1080i	27.0	48.0	74.3	R/Y/D/H	—	—	—	—	—
1080/25p	1920 x 1080	28.1	25.0	74.3	R/Y/D/H	—	✓	—	✓	—
1080/30p	1920 x 1080	33.8	30.0	74.3	R/Y/D/H	—	—	—	—	—
1080/60p	1920 x 1080	67.5	60.0	148.5	R/Y/D/H	—	✓	—	✓	✓
1080/50p	1920 x 1080	56.3	50.0	148.5	R/Y/D/H	—	✓	—	✓	✓
640 x 400/70	640 x 400	31.5	70.1	25.2	R/D/H	—	—	—	—	—
640 x 400/85	640 x 400	37.9	85.1	31.5	R/D/H	—	—	—	—	—
640 x 480/60	640 x 480	31.5	59.9	25.2	R/D/H	✓	✓	✓	✓	✓
640 x 480/67	640 x 480	35.0	66.7	30.2	R/D/H	—	—	—	—	—
640 x 480/73	640 x 480	37.9	72.8	31.5	R/D/H	✓	—	✓	✓	✓
640 x 480/75	640 x 480	37.5	75.0	31.5	R/D/H	✓	—	✓	✓	✓
640 x 480/85	640 x 480	43.3	85.0	36.0	R/D/H	—	—	—	—	—
800 x 600/56	800 x 600	35.2	56.3	36.0	R/D/H	✓	—	✓	✓	✓
800 x 600/60	800 x 600	37.9	60.3	40.0	R/D/H	✓	—	✓	✓	✓
800 x 600/72	800 x 600	48.1	72.2	50.0	R/D/H	✓	—	✓	✓	✓
800 x 600/75	800 x 600	46.9	75.0	49.5	R/D/H	✓	—	✓	✓	✓
800 x 600/85	800 x 600	53.7	85.1	56.3	R/D/H	—	—	—	—	—
832 x 624/75	832 x 624	49.7	74.6	57.3	R/D/H	✓	—	✓	✓	✓
1024 x 768/50	1024 x 768	39.6	50.0	51.9	R/D/H	—	—	—	—	—
1024 x 768/60	1024 x 768	48.4	60.0	65.0	R/D/H	✓	—	✓	✓	✓
1024 x 768/70	1024 x 768	56.5	70.1	75.0	R/D/H	✓	—	✓	✓	✓
1024 x 768/75	1024 x 768	60.0	75.0	78.8	R/D/H	✓	—	✓	✓	✓
1024 x 768/82	1024 x 768	65.5	81.6	86.0	R/D/H	—	—	—	—	—
1024 x 768/85	1024 x 768	68.7	85.0	94.5	R/D/H	—	—	—	—	—
1024 x 768/100	1024 x 768	81.4	100.0	113.3	R/D/H	—	—	—	—	—
1024 x 768/120	1024 x 768	98.7	120.0	139.1	R/D/H	✓	—	✓	✓	✓
1152 x 864/60	1152 x 864	53.7	60.0	81.6	R/D/H	—	—	—	—	—
1152 x 864/70	1152 x 864	64.0	70.0	94.2	R/D/H	—	—	—	—	—
1152 x 864/75	1152 x 864	67.5	75.0	108.0	R/D/H	—	—	—	—	—
1152 x 864/85	1152 x 864	77.1	85.0	119.7	R/D/H	—	—	—	—	—
1152 x 870/75	1152 x 870	68.7	75.1	100.0	R/D/H	✓	—	✓	✓	✓
1280 x 720/50	1280 x 720	37.1	49.8	60.5	R/D/H	—	—	—	—	—
1280 x 720/60	1280 x 720	44.8	59.9	74.5	R/D/H	—	—	—	—	—
1280 x 720/100	1280 x 720	76.3	100.0	131.8	R/D/H	—	—	—	—	—
1280 x 720/120	1280 x 720	92.6	120.0	161.6	R/D/H	—	—	—	—	—

DLP™ Projector

PT-RW930B/RW930W/RW930LB/RW930LW

The following table specifies the video signals compatible with the projector.

- Symbols that indicate formats are as follows.
  ––V : VIDEO, Y/C
  ––R: RGB (analog)
  ––Y: YC_BC_R/YP_BP_R (analog)
  ––D: DVI-D
  ––H: HDMI
- Input corresponding to each item in the plug and play column is as follows.
  ––RGB2: RGB2 input
  ––DVI-D: DVI-D input
  ––HDMI/DL: HDMI input, DIGITAL LINK input

Compatible signal	Resolution (Dots)	Scanning freq. H (KHz)	Scanning freq. V (Hz)	Dot clock freq. (MHz)	Format	Plug and Play*1 RGB2	DVD-D EDID1	DVD-D EDID2	DVD-D EDID3	HDMI DL
1280 x 768/50	1280 x 768	39.6	49.9	65.3	R/D/H	—	—	—	—	—
1280 x 768/60	1280 x 768	47.8	59.9	79.5	R/D/H	—	—	—	—	—
	1280 x 768*3	47.4	60.0	68.3	R/D/H	—	—	—	—	—
1280 x 768/75	1280 x 768	60.3	74.9	102.3	R/D/H	—	—	—	—	—
1280 x 768/85	1280 x 768	68.6	84.8	117.5	R/D/H	—	—	—	—	—
1280 x 800/50	1280 x 800	41.3	50.0	68.0	R/D/H	—	—	—	—	—
1280 x 800/60	1280 x 800	49.7	59.8	83.5	R/D/H	✓	✓	✓	✓	✓
	1280 x 800*3	49.3	59.9	71.0	R/D/H	—	—	—	—	—
1280 x 800/75	1280 x 800	62.8	74.9	106.5	R/D/H	—	—	—	—	—
1280 x 800/85	1280 x 800	71.6	84.9	122.5	R/D/H	—	—	—	—	—
1280 x 960/60	1280 x 960	60.0	60.0	108.0	R/D/H	—	—	—	—	—
1280 x 1024/50	1280 x 1024	52.4	50.0	88.0	R/D/H	—	—	—	—	—
1280 x 1024/60	1280 x 1024	64.0	60.0	108.0	R/D/H	—	—	—	—	—
1280 x 1024/66	1280 x 1024	72.3	66.3	125.0	R/D/H	—	—	—	—	—
1280 x 1024/72	1280 x 1024	78.2	72.0	135.1	R/D/H	—	—	—	—	—
1280 x 1024/75	1280 x 1024	80.0	75.0	135.0	R/D/H	✓	—	✓	✓	✓
1280 x 1024/85	1280 x 1024	91.1	85.0	157.5	R/D/H	—	—	—	—	—
1366 x 768/50	1366 x 768	39.6	49.9	69.0	R/D/H	—	—	—	—	—
1366 x 768/60	1366 x 768	47.7	59.8	85.5	R/D/H	—	—	—	—	—
1400 x 1050/50	1400 x 1050	54.1	50.0	99.9	R/D/H	—	—	—	—	—
1400 x 1050/60	1400 x 1050	64.0	60.0	108.0	R/D/H	—	—	—	—	—
	1400 x 1050	65.3	60.0	121.8	R/D/H	—	—	—	—	—
	1400 x 1050	65.2	60.0	122.6	R/D/H	✓	—	✓	✓	✓
1400 x 1050/72	1400 x 1050	78.8	72.0	149.3	R/D/H	—	—	—	—	—
1400 x 1050/75	1400 x 1050	82.2	75.0	155.9	R/D/H	—	—	—	—	—
1440 x 900/50	1440 x 900	46.3	49.9	86.8	R/D/H	—	—	—	—	—
1440 x 900/60	1440 x 900	55.9	59.9	106.5	R/D/H	—	—	—	—	—
1600 x 900/50	1600 x 900	46.4	49.9	96.5	R/D/H	—	—	—	—	—
1600 x 900/60	1600 x 900	55.9	60.0	119.0	R/D/H	✓	—	✓	✓	✓
1600 x 1200/50	1600 x 1200	61.8	49.9	131.5	R/D/H	—	—	—	—	—
1600 x 1200/60	1600 x 1200	75.0	60.0	162.0	R/D/H	✓	—	✓	✓	✓
1680 x 1050/50	1680 x 1050	54.1	50.0	119.5	R/D/H	—	—	—	—	—
1680 x 1050/60	1680 x 1050	65.3	60.0	146.3	R/D/H	—	—	—	—	—
1920 x 1080/50	1920 x 1080	55.6	49.9	141.5	R/D/H	—	—	—	—	—
1920 x 1080/60	1920 x 1080*3	66.6	59.9	138.5	R/D/H	—	—	—	—	—
	1920 x 1080*4	67.2	60.0	173.0	R	—	—	—	—	—
1920 x 1200/50	1920 x 1200	61.8	49.9	158.3	R/D/H	—	—	—	—	—
1920 x 1200/60	1920 x 1200*4	74.6	59.9	193.3	R	—	—	—	—	—
1920 x 1200/60RB	1920 x 1200*3	74.0	60.0	154.0	R/D/H	✓	—	✓	—	—

***1 Signals with a ✓ in the Plug and play columns are signals described in EDID (extended display identification data) of the projector. If a signal has no ✓ in the Plug and play columns but has an entry in the Format column, it can be input. For signals without a ✓ in the Plug and play columns, there are instances when resolution cannot be selected on the computer even though the projector supports them.**

***2 Only compatible with dot clock frequency of 27 MHz (pixel repetition signal)**

***3 Compliant with VESA CVT-RB (Coordinated Video Timing-Reduced Blanking).**

***4 Image resolution is reduced by the image processing circuit before projection.**

NOTE:

- **A signal with a different resolution is converted to the number of display dots. The number of display dots is as follows. 1920 x 1200**
- **The "i" at the end of the resolution indicates an interlaced signal.**
- **When interlaced signals are connected, flickering may occur on the projected image.**
- **DIGITAL LINK input compatible signal is the same as HDMI input compatible signal.**

DLP™ Projector

PT-RW930B/RW930W/RW930LB/RW930LW

Notes on projector placement and operation

- Prevent hot and cool air from the air conditioning system to blow directly to the ventilation ports (intake and exhaust) of the projector.
- Do not stack projectors on top of each other.
- Do not block the ventilation ports (intake and exhaust) of the projector.

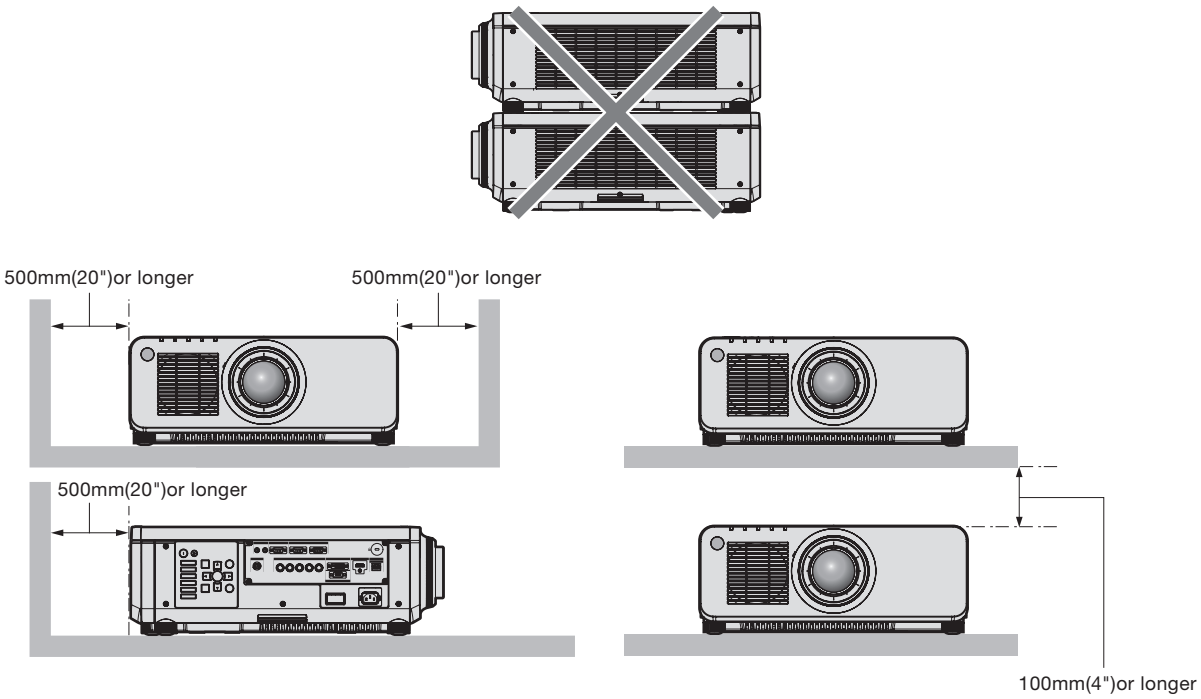

- Do not install the projector in a confined space.
  When installing the projector in a confined space, provide air conditioning or ventilation separately. Exhaust heat may accumulate when the ventilation is not enough, triggering the protection circuit of the projector.