ET-8INS EtherTRAK® Ethernet I/O Module

Sixnet Automation Series

▶▶▶ Ethernet I/O Module – Instrumentation Input

PRODUCT HIGHLIGHTS

- Advanced 16 bit A/D for extreme accuracy
- Differential inputs minimize noise and ground loops
- Software selectable ranges - mix inputs on module
- Linearizes and compensates thermocouple readings
- Upscale/downscale thermocouple burnout detection

PERFORMANCE SPECIFICATIONS

- 8 channels
- Lowest voltage range +/- 0.062 Volts
- Maximum voltage range +/- 10 Volts
- Auto-polarity current range 4-20 mA, 0-20 mA
- Thermocouple types J,K,E,R,T,B,C,N,S[1]
- A/D resolution 16 bits (0.003%)
- Full scale accuracy (@20°C) +/- 0.02%
- Input span and offset adjustability +/- 25%
- Span and offset temp. coefficient +/- 30 ppm per °C typical
- Voltage range input impedance 200K Ohms
- Current range input impedance 100 Ohms
- CMRR (@ 50/60 Hz) 140 dB
- DMRR (@ 50/60 Hz) 66 dB
- Common mode input voltage:
  Between two input terminals +/- 25VDC
  Between inputs and ground 1200 Volts
- No damage input voltage +/- 50 VDC
- Fastest scan rate (all 8 channels) 100 mS[2]
- Required supply voltage 10-30 VDC (1.6 watt typical)
- Operating temperature range -30 to 70° C
- Storage temperature range -40 to 85° C
- Humidity (non-condensing) 5 to 95%

Notes:

1. Thermocouple inputs are cold-junction compensated and reported as F,C, 0.1F or 0.1C.
2. This scan rate applies to modules built after 30-July-04. Earlier models may differ. Contact us for details.

RS485 PORT FOR I/O EXPANSION

- 32 Max. RS485 stations (up to 512 I/O)
- Baud rate: 38,400 bps
- Recommended distance of up to 0.5 mile
- Protocol: Sixnet "I/O for Windows", Modbus ASCII & RTU
- Isolation (from Ethernet port) 1200 Volts RMS 1 minute

ORDERING INFORMATION

ET-8INS-U	**Instrumentation module with base**
ET-8INS-M	**Replacement module only**

All specifications are subject to change. Consult factory for latest info.



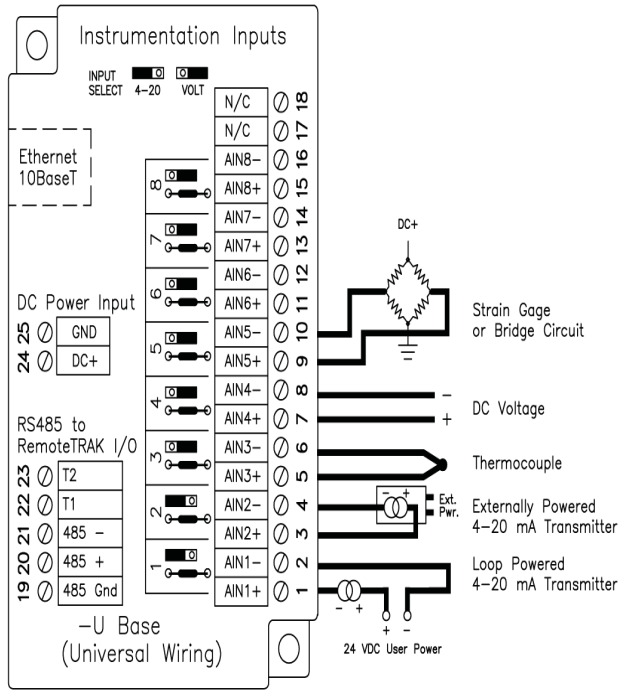

Connect Up to 8 4–20 mA, Voltage or Thermocouple Inputs

Equivalent Circuit

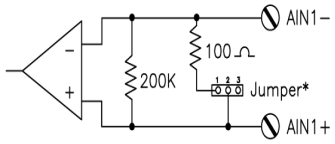

* Jumper 1 to 2 for 4–20 mA Range

www.redlion.net

Connect. Monitor. Control.

Americas
sales@redlion.net

Asia-Pacific
asia@redlion.net

Europe
Middle East
Africa
europe@redlion.net

+1 (717) 767-6511

As the global experts in communication, monitoring and control for industrial automation and networking, Red Lion has been delivering innovative solutions for over forty years. Our award-winning technology enables companies worldwide to gain real-time data visibility that drives productivity. Product brands include Red Lion, N-Tron and Sixnet. With headquarters in York, Pennsylvania, the company has offices across the Americas, Asia-Pacific and Europe. For more information, please visit www.redlion.net. Red Lion is a Spectris company.

ADLD0174 090913 ©2013 Red Lion Controls