Positive-Voltage Regulator

◆ Description

The 78Dxx series are fixed-voltage monolithic integrated circuit voltage regulators designed for wide range of applications.

◆ Features

- Three Terminal Regulators.
- Output Current up to:1.0A.
- No External Components.
- Internal Thermal Overload Protection.
- Internal Short-Circuit Limiting.
- Output Voltage Offered in 4% Tolerance.

◆ Typical Application

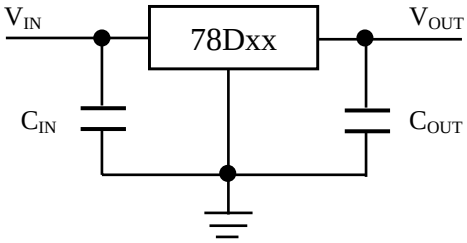

◆ Applications

- Linear Regulator
- Microprocessor Power Supply
- Graphic Card
- Mother Board
- Security Product

◆ Pin Description

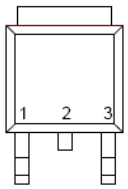

IN GND OUT

TO-252 (Top View)

Copyright @ Estek Electronics Co., Ltd

◆ Ordering Information

Part Number	Temperature Range	Package	Pin Assignment			Packing
			Input	GND	Output	
78D05UI	-40 °C ~ +125 °C	TO-252	1	2	3	Tape & Reel
78D06UI						
78D08UI						
78D09UI						
78D10UI						
78D12UI						
78D15UI						
78D18UI						
78D20UI						
78D24UI						

◆ Absolute Maximum Ratings

Symbol	Parameter	Value		Unit
		78D05~78D18	78D20~78D24	
V_{IN}	Input voltage	35	40	V
I_{OUT}	Output current	1.0		A
TA	Operating ambient temperature	-40 ~ +125		°C
T_J	Operating junction temperature	150		°C
T_{STG}	Storage temperature	-65 ~ +150		°C
T_{LEAD}	Lead temperature 1.6mm from case for 10 seconds	260		°C

◆ Thermal Characteristics

Symbol	Parameter	Package	Typical Value	Unit
θ_{JA}	Thermal Resistance From Junction to Ambient in Free Air. (Measured with the component mounted on a high effective thermal conductivity test board in free air.)	TO-252	62.5	°C/W

Copyright @ Estek Electronics Co., Ltd

◆ 78D05 Electrical Characteristics (T_A=25°C, V_{IN}=10V, I_{OUT}=500mA, unless otherwise noted .)

Symbol	Parameter	Test Conditions*		Min.	Typ.	Max.	Unit
V_{OUT}**	Output voltage			4.8	5.0	5.2	V
		I_O=5mA to 1.0A V_{IN}=7V to 20V	0 to 125°C	4.75	5.00	5.25	
Reg_{line}	Line regulation	V_{IN}=7V to 25V		-	-	100	mV
		V_{IN}=8V to 12V		-	-	50	
Reg_{load}	Load regulation	I_O=250mA to 750mA		-	-	50	mV
		I_O=5mA to 1.0A		-	-	100	
PSRR	Ripple rejection	V_{IN}=8V to 18V, f=120Hz		62	80	-	dB
V_n	Output noise voltage	F=10Hz~100Hz		-	40	-	uV
$V_{DROPOUT}$	Dropout voltage			-	2.0	-	V
I_Q	Bias current			-	-	8.0	mA
$\triangle I_Q$	Bias current change	V_{IN}=7V to 25V	0 to 125°C	-	-	1.3	mA
		I_O=5mA to 1.0A		-	-	0.5	

◆ 78D06 Electrical Characteristics (T_A=25°C, V_{IN}=11V, I_{OUT}=500mA, unless otherwise noted .)

Symbol	Parameter	Test Conditions*		Min.	Typ.	Max.	Unit
V_{OUT}**	Output voltage			5.75	6.00	6.25	V
		I_O=5mA to 1.0A V_{IN}=8V to 21V	0 to 125°C	5.7	6.0	6.3	
Reg_{line}	Line regulation	V_{IN}=8V to 25V		-	-	120	mV
		V_{IN}=9V to 13V		-	-	60	
Reg_{load}	Load regulation	I_O=250mA to 750mA		-	-	60	mV
		I_O=5mA to 1.0A		-	-	120	
PSRR	Ripple rejection	V_{IN}=9V to 19V, f=120Hz		62	80	-	dB
V_n	Output noise voltage	F=10Hz~100Hz		-	45	-	uV
$V_{DROPOUT}$	Dropout voltage			-	2.0	-	V
I_Q	Bias current			-	-	8.0	mA
$\triangle I_Q$	Bias current change	V_{IN}=8V to 25V	0 to 125°C	-	-	1.0	mA
		I_O=5mA to 1.0A		-	-	0.5	

Copyright @ Estek Electronics Co., Ltd

◆ 78D08 Electrical Characteristics (T_A=25°C, V_{IN}=14V, I_{OUT}=500mA, unless otherwise noted .)

Symbol	Parameter	Test Conditions*		Min.	Typ.	Max.	Unit
V_{OUT}**	Output voltage			7.7	8.0	8.3	V
		I_O=5mA to 1.0A V_{IN}=10.5V to 23V	0 to 125°C	7.6	8.0	8.4	
Reg_{line}	Line regulation	V_{IN}=10.5V to 25V		-	-	160	mV
		V_{IN}=11V to 17V		-	-	80	
Reg_{load}	Load regulation	I_O=250mA to 750mA		-	-	80	mV
		I_O=5mA to 1.0A		-	-	160	
PSRR	Ripple rejection	V_{IN}=11.5V to 21.5V, f=120Hz		62	80		dB
V_n	Output noise voltage	F=10Hz~100Hz		-	52		uV
$V_{DROPOUT}$	Dropout voltage			-	2.0		V
I_Q	Bias current			-	-	8.0	mA
$\triangle I_Q$	Bias current change	V_{IN}=10.5V to 25V	0 to 125°C	-	-	1.0	mA
		I_O=5mA to 1.0A		-	-	0.5	

◆ 78D09 Electrical Characteristics (T_A=25°C, V_{IN}=15V, I_{OUT}=500mA, unless otherwise noted .)

Symbol	Parameter	Test Conditions*		Min.	Typ.	Max.	Unit
V_{OUT}**	Output voltage			8.65	9.00	9.35	V
		I_O=5mA to 1.0A V_{IN}=11.5V to 24V	0 to 125°C	8.55	9.00	9.45	
Reg_{line}	Line regulation	V_{IN}=11V to 26V		-	-	180	mV
		V_{IN}=11.5V to 17V		-	-	90	
Reg_{load}	Load regulation	I_O=250mA to 750mA		-	-	90	mV
		I_O=5mA to 1.0A		-	-	180	
PSRR	Ripple rejection	V_{IN}=12V to 23.5V, f=120Hz		62	80		dB
V_n	Output noise voltage	F=10Hz~100Hz		-	58		uV
$V_{DROPOUT}$	Dropout voltage			-	2.0		V
I_Q	Bias current			-	-	8.0	mA
$\triangle I_Q$	Bias current change	V_{IN}=11.5V to 26V	0 to 125°C	-	-	1.0	mA
		I_O=5mA to 1.0A		-	-	0.5	

Copyright @ Estek Electronics Co., Ltd

◆ 78D12 Electrical Characteristics (T_A=25°C, V_{IN}=19V, I_{OUT}=500mA, unless otherwise noted .)

Symbol	Parameter	Test Conditions*		Min.	Typ.	Max.	Unit
V_{OUT}**	Output voltage			11.5	12.0	12.5	V
		I_O=5mA to 1.0A V_{IN}=14.5V to 27V	0 to 125°C	11.4	12.0	12.6	
Reg_{line}	Line regulation	V_{IN}=14.5V to 30V		-	-	240	mV
		V_{IN}=16V to 23V		-	-	120	
Reg_{load}	Load regulation	I_O=250mA to 750mA		-	-	120	mV
		I_O=5mA to 1.0A		-	-	240	
PSRR	Ripple rejection	V_{IN}=15V to 25V, f=120Hz		62	80	-	dB
V_n	Output noise voltage	F=10Hz~100Hz		-	75	-	uV
$V_{DROPOUT}$	Dropout voltage			-	2.0	-	V
I_Q	Bias current			-	-	8.0	mA
$\triangle I_Q$	Bias current change	V_{IN}=14.5V to 30V	0 to 125°C	-	-	1.0	mA
		I_O=5mA to 1.0A		-	-	0.5	

◆ 78D15 Electrical Characteristics (T_A=25°C, V_{IN}=23V, I_{OUT}=500mA, unless otherwise noted .)

Symbol	Parameter	Test Conditions*		Min.	Typ.	Max.	Unit
V_{OUT}**	Output voltage			14.4	15.0	15.6	V
		I_O=5mA to 1.0A V_{IN}=17.5V to 30V	0 to 125°C	14.25	15.0	15.75	
Reg_{line}	Line regulation	V_{IN}=17.5V to 30V		-	-	300	mV
		V_{IN}=20V to 26V		-	-	150	
Reg_{load}	Load regulation	I_O=250mA to 750mA		-	-	150	mV
		I_O=5mA to 1.0A		-	-	300	
PSRR	Ripple rejection	V_{IN}=18.5V to 28.5V, f=120Hz		60	70	-	dB
V_n	Output noise voltage	F=10Hz~100Hz		-	100	-	uV
$V_{DROPOUT}$	Dropout voltage			-	2.0	-	V
I_Q	Bias current			-	-	8.0	mA
$\triangle I_Q$	Bias current change	V_{IN}=17.5V to 30V	0 to 125°C	-	-	1.0	mA
		I_O=5mA to 1.0A		-	-	0.5	

Copyright @ Estek Electronics Co., Ltd

◆ 78D18 Electrical Characteristics (T_A=25°C, V_{IN}=27V, I_{OUT}=500mA, unless otherwise noted .)

Symbol	Parameter	Test Conditions*		Min.	Typ.	Max.	Unit
V_{OUT}**	Output voltage			17.3	18.0	18.7	V
		I_O=5mA to 1.0A V_{IN}=21V to 33V	0 to 125°C	17.1	18.0	18.9	
Reg_{line}	Line regulation	V_{IN}=21.5V to 33V		-	-	360	mV
		V_{IN}=24V to 30V		-	-	180	
Reg_{load}	Load regulation	I_O=250mA to 750mA		-	-	180	mV
		I_O=5mA to 1.0A		-	-	360	
PSRR	Ripple rejection	V_{IN}=22.5V to 32V, f=120Hz		60	70	-	dB
V_n	Output noise voltage	F=10Hz~100Hz		-	100	-	uV
$V_{DROPOUT}$	Dropout voltage			-	2.0	-	V
I_Q	Bias current			-	-	8.0	mA
$\triangle I_Q$	Bias current change	V_{IN}=21V to 33V	0 to 125°C	-	-	1.0	mA
		I_O=5mA to 1.0A		-	-	0.5	

◆ 78D20 Electrical Characteristics (T_A=25°C, V_{IN}=29V, I_{OUT}=500mA, unless otherwise noted .)

Symbol	Parameter	Test Conditions*		Min.	Typ.	Max.	Unit
V_{OUT}**	Output voltage			19.2	20.0	20.8	V
		I_O=5mA to 1.0A V_{IN}=23V to 35V	0 to 125°C	19.0	20.0	21.0	
Reg_{line}	Line regulation	V_{IN}=23V to 35V		-	-	400	mV
		V_{IN}=26V to 32V		-	-	200	
Reg_{load}	Load regulation	I_O=250mA to 750mA		-	-	200	mV
		I_O=5mA to 1.0A		-	-	400	
PSRR	Ripple rejection	V_{IN}=24.5V to 35V, f=120Hz		55	65	-	dB
V_n	Output noise voltage	F=10Hz~100Hz		-	120	-	uV
$V_{DROPOUT}$	Dropout voltage			-	2.0	-	V
I_Q	Bias current			-	-	8.0	mA
$\triangle I_Q$	Bias current change	V_{IN}=23V to 35V	0 to 125°C	-	-	1.0	mA
		I_O=5mA to 1.0A		-	-	0.5	

Copyright @ Estek Electronics Co., Ltd

◆ 78D24 Electrical Characteristics (T_A=25°C, V_{IN}=31V, I_{OUT}=500mA, unless otherwise noted .)

Symbol	Parameter	Test Conditions*		Min.	Typ.	Max.	Unit
V_{OUT}**	Output voltage			23.0	24.0	25.0	V
		I_O=5mA to 1.0A V_{IN}=27V to 38V	0 to 125°C	22.8	24.0	25.2	
Reg_{line}	Line regulation	V_{IN}=27V to 38V		-	-	480	mV
		V_{IN}=30V to 36V		-	-	240	
Reg_{load}	Load regulation	I_O=250mA to 750mA		-	-	240	mV
		I_O=5mA to 1.0A		-	-	480	
PSRR	Ripple rejection	V_{IN}=28.5V to 37V, f=120Hz		55	65	-	dB
V_n	Output noise voltage	F=10Hz~100Hz		-	140	-	uV
$V_{DROPOUT}$	Dropout voltage			-	2.0	-	V
I_Q	Bias current			-	-	8.0	mA
$\triangle I_Q$	Bias current change	V_{IN}=27V to 38V	0 to 125°C	-	-	1.0	mA
		I_O=5mA to 1.0A		-	-	0.5	

Note:

* Pulse testing techniques are used to maintain the junction temperature as close to the ambient temperature as possible. Thermal effects must be taken into account separately. All characteristics are measured with a 0.33uF capacitor across the input and a 0.1uF capacitor across the output.

** The specification applies only for DC power dissipation permitted by absolute maximum rating.

Copyright @ Estek Electronics Co., Ltd

◆ Typical Characteristics

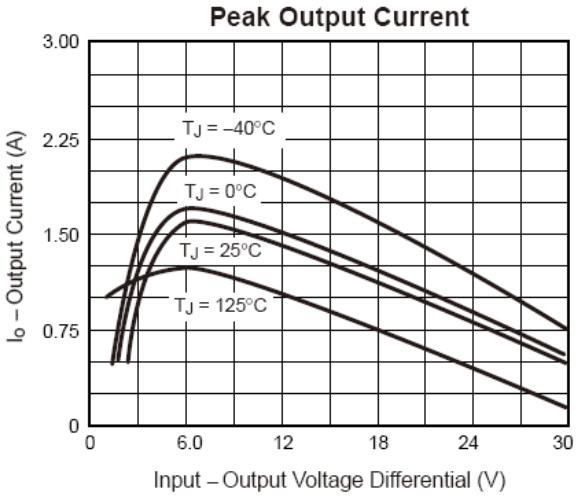

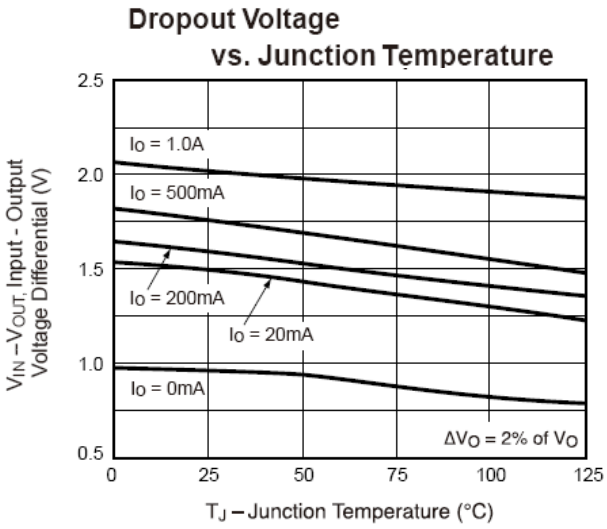

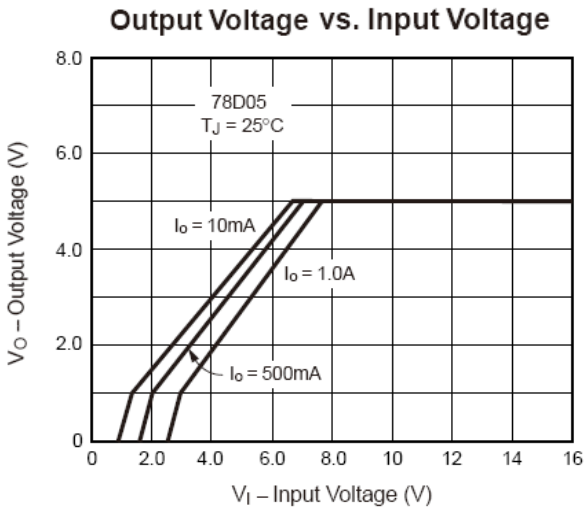

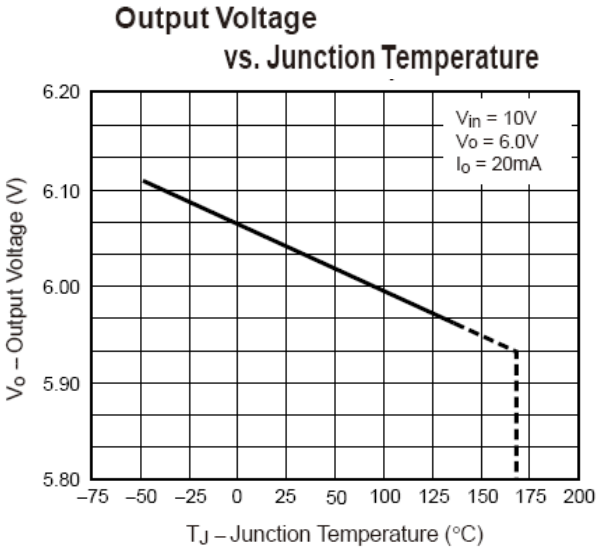

Copyright @ Estek Electronics Co., Ltd

◆ Package Information

TO-252

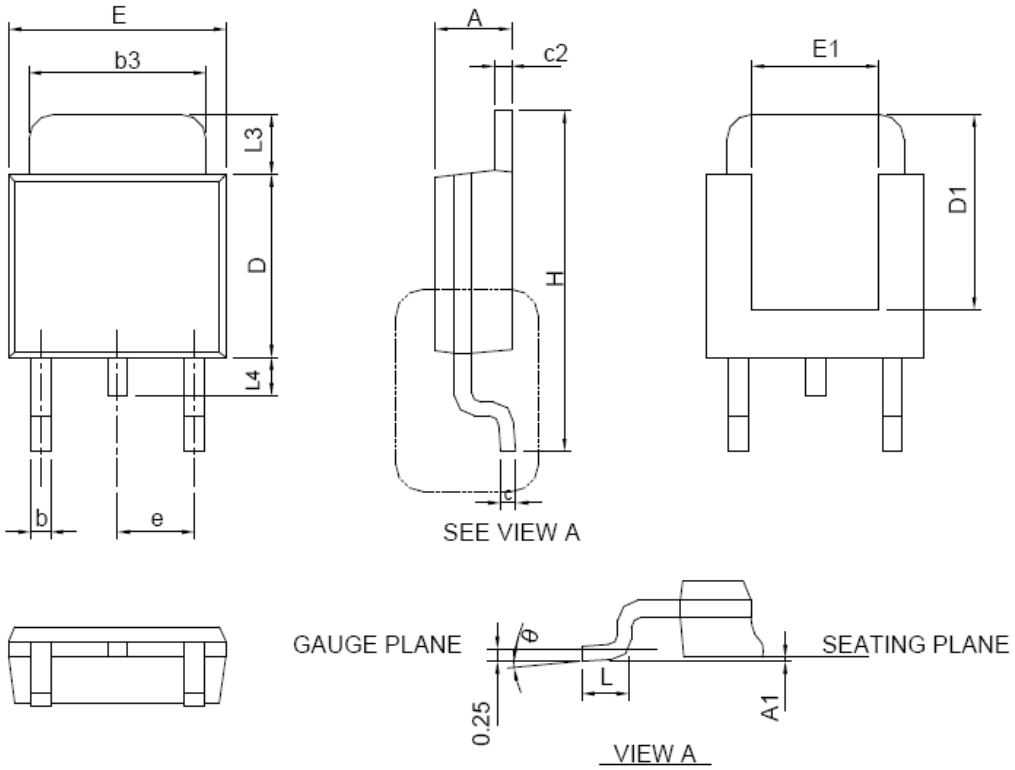

SYMBOL	TO-252			
	MILLIMETERS		INCHES	
	MIN.	MAX.	MIN.	MAX.
A	2.18	2.39	0.086	0.094
A1		0.13		0.005
b	0.50	0.89	0.020	0.035
b3	4.95	5.46	0.195	0.215
c	0.46	0.61	0.018	0.024
c2	0.46	0.89	0.018	0.035
D	5.33	6.22	0.210	0.245
D1	4.57	6.00	0.180	0.236
E	6.35	6.73	0.250	0.265
E1	3.81	6.00	0.150	0.236
e	2.29 BSC		0.090 BSC	
H	9.40	10.41	0.370	0.410
L	0.90	1.78	0.035	0.070
L3	0.89	2.03	0.035	0.080
L4		1.02		0.040
θ	0°	8°	0°	8°

Copyright @ Estek Electronics Co., Ltd