E-T-A Electronic Standard Relay - ESR10 ISO Micro

Description

The smart power relay ESR10 Micro (Electronic Standard Relay) is a solid state relay which can replace electro-mechanical relays.

The ESR10 is a plus switching (high side switch) closing relay (NO) in an ISO Micro automotive relay enclosure.

It allows bipolar control by a positive voltage. This space-saving relay is available in three power classes:
- 10 A for max. 85° C / (12 and 24) Vdc
- 17 A for max. 105° C / (12 and 24) Vdc
- 30 A for max. 85° C / 12 Vdc

Applications

The ESR10 helps to switch loads whose current demand is too high to be connected directly to the controlgear. The switching function of the ESR10 is completely noiseless. This allows installation in the vehicle's interior.

The ESR10 Micro is suitable for all applications in DC 12 V or 24 V electrical systems where valves, motors, lamps etc. have to switched:
- Road vehicles (passenger cars, bicycles, trucks, buses, working vehicles and emergency cars, special vehicles)
- Construction vehicles and agricultural vehicles
- Watercraft (ships, sailing boats, motor yachts etc.)

Benefits

- The low current consumption, particularly in the ON condition, helps to reduce gas consumption as well as CO_2 emissions.
- The solid state relay switches silently and features wear-free operation of all loads with an extremely long life span.

Order numbering code

Type No.									
ESR10	electronic standard relay								
	Protection (characteristic curve)								
	N	not protected, only short circuit protection							
		Type of enclosure							
		C2	Micro enclosure with hexagonal latching lugs						
			Terminals (pins)						
			A4	standard automotive, 4-pole (ISO)					
				Load and control					
				HB	high-side-switch (HSS), bipolar control				
					Sub type				
					00	standard			
						System voltage			
						D1	DC 12 V		
						D2	DC 24 V		
							Current rating (at 25°C)		
							10 A		
							17 A		
							30 A *		
ESR10	-	N	C2	A4	HB	- 00	- D1	- 10A	ordering example

* The 30A version of the ESR10 Micro will only be available upon request and for high volume projects (> 5000 pcs). Small quantities cannot be ordered.



ESR10 Micro

Technical data (25 °C) – ESR10 Micro 10 A

Voltage supply LINE+		
System voltage	U_B	DC 12 V / DC 24 V
Operating voltage		6...16 V / 10...32 V
Closed current[1]	OFF	8 µA
Load circuit LOAD		
Load output		MOSFET, high side switching (HSS)
Load types		resistive, inductive and capacitive
Protective function		short circuit proof, temperature disconnection (pulsing)
Current rating	I_N	10 A
Voltage drop[1]	U_{ON}	75 mV
Max. short circuit current		60 A (L/R = 3 ms)
Control input IN+		
Control voltage	ON OFF	12 V: ±6...16 V; 24 V: ±10...32 V 12 V: ±0...2 V; 24 V: ±0...4 V
Control current [1] [2]		10 mA (at 13.5 V respectively 27 V) (derating see chart)
Switching frequency	max.	see chart
Rising edge		< 5 ms
General data		
Reverse polarity protection circuit, load circuit	load	yes (reverse polarity conductive) [3]
Cycle times [1]	t_{ON} t_{OFF}	0.5 ms 0.5 ms
Temperature range		-40 °C…85 °C
Dimensions		ISO Standard Micro (with retaining lugs)
plugged in		26 x 15.5 x 26 mm
including contacts		26 x 15.5 x 37 mm
Mass[1]		15 g

[1] typically

[2] The upstream controlgear may misconstrue the situation as “wire break” due to the extremely low control current. In this case the trigger threshold should be adjusted.

[3] In the event of reverse polarity connection, the MOSFET will switch through automatically for self-protection.

5

Technical data (25 °C) – ESR10 Micro 17 A

Voltage supply LINE+		
System voltage	U_B	DC 12 V / DC 24 V
Operating voltage		6...16 V / 10...32 V
Closed current[1)]	OFF	8 µA
Load circuit LOAD		
Load output		MOSFET, high side switching (HSS)
Load types		resistive, inductive and capacitive
Protective function		short circuit proof, temperature disconnection (pulsing)
Current rating	I_N	17 A
Voltage drop[1)]	U_{ON}	75 mV
Max. short circuit current		100 A (L/R = 3 ms)
Control input IN+		
Control voltage	ON OFF	12 V: ±6...16 V; 24 V: ±10...32 V 12 V: ±0...2 V; 24 V: ±0...4 V
Control current [1) 2)]		10 mA (at 13.5 V respectively 27 V) (derating see chart)
Switching frequency	max.	see chart
Rising edge		< 5 ms
General data		
Reverse polarity protection circuit, load circuit	load	yes (reverse polarity conductive) [3)]
Cycle times [1)]	t_{ON} t_{OFF}	0.5 ms 0.5 ms
Temperature range		-40 °C…105 °C
Dimensions		ISO Standard Micro (with retaining lugs)
plugged in		26 x 15.5 x 26 mm
including contacts		26 x 15.5 x 37 mm
Mass[1)]		15 g

Approvals

Authority	Approval mark	Regulation
KBA	E1	ECE R 10

Technical data (25 °C) – ESR10 Micro 30 A

Voltage supply LINE+		
System voltage	U_B	DC 12 V
Operating voltage		6...16 V
Closed current[1)]	OFF	5 µA
Load circuit LOAD		
Load output		MOSFET, high side switching (HSS)
Load types		resistive, inductive and capacitive
Protective function		short circuit proof, temperature disconnection (pulsing)
Current rating	I_N	30 A
Voltage drop[1)]	U_{ON}	50 mV
Max. short circuit current		100 A (L/R = 3 ms)
Control input IN+		
Control voltage	ON OFF	12 V: ±6...16 V 12 V: ±0...2 V
Control current [1) 2)]		10 mA (at 13.5 V respectively 27 V) (derating see chart)
Switching frequency	max.	see chart
Rising edge		< 5 ms
General data		
Reverse polarity protection circuit, load circuit	load	yes (reverse polarity conductive) [3)]
Cycle times [1)]	t_{ON} t_{OFF}	0.5 ms 3.5 ms
Temperature range		-40 °C…85 °C
Dimensions		ISO Standard Micro (with retaining lugs)
plugged in		26 x 15.5 x 26 mm
including contacts		26 x 15.5 x 37 mm
Mass[1)]		15 g

Important: The 30A version of the ESR10 Micro will only be available upon request and for high volume projects (> 5000 pcs). Small quantities cannot be ordered.

5

Qualifications

ESR10 Micro 10 A/12 V variant, VW
VW80000:2013-06 (LV124)
TL81000:2013-02
ESR10 Micro 10 A/12 V variant, GM
GMW 15267
GMW 3097
ESR10 Micro 10 A, 17 A, 30 A / 24 V
Environmental tests to LV124 (Specification and severity to VW80000: 2013-06) Electrical tests to ISO 16750-2

Pin assignment

ESR10 Micro			
LINE +	3	(30)	U_B
IN_a	1	(86/31)	control input
IN_b	2	(31/86)	ground
LOAD	5	(88a)	load output

( ) ≙ Automotive terminal designation

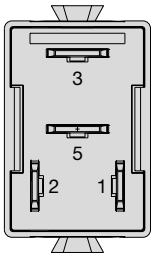

Dimensions

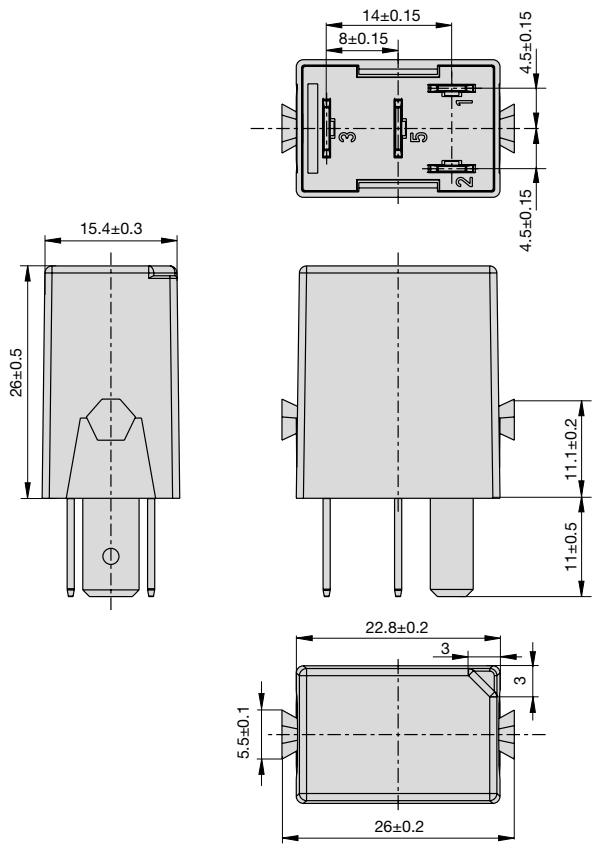

Pin assignment is in accordance with ISO 7588
3 and 5 – blade terminals 6.3 x 0.8 [mm]
1 and 2 – blade terminals 4.8 x 0.8 [mm]

Schematic diagram

Alternative control of bipolar control inputs

Control inputs	IN a	IN b
alternative 1	U_B	GND
alternative 2	GND	U_B

alternative 1

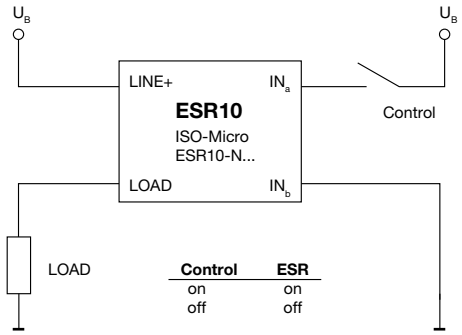

alternative 2

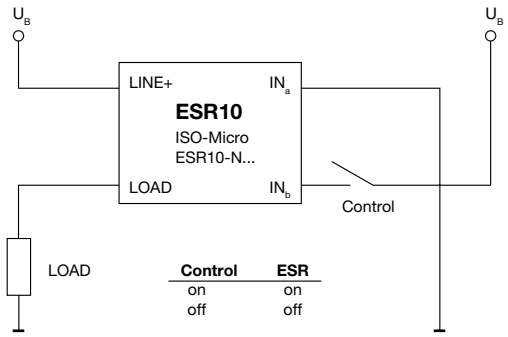

All dimensions without tolerances are for reference only. E-T-A reserves the right change specifications at any time in the interest of improved design, performance and cost effectiveness, the right to make changes in these specifications without notice is reserved. Product markings may not be exactly as the ordering codes. Errors and omissions excepted.

Derating

Control current for – 10 A variant

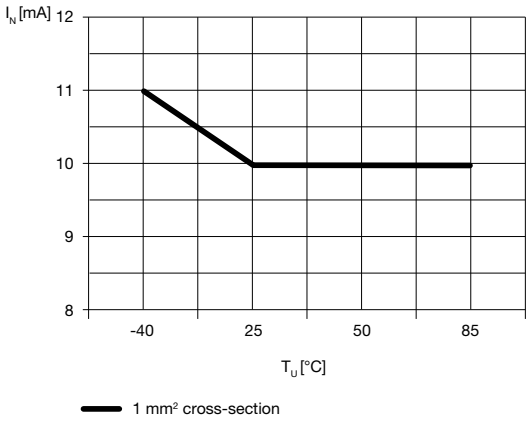

Control current for – 30 A variant

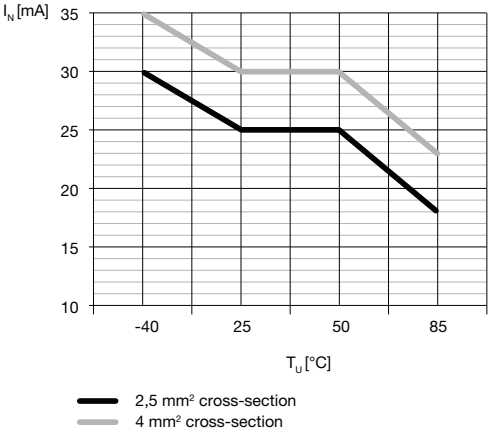

Control current for 17 A variant

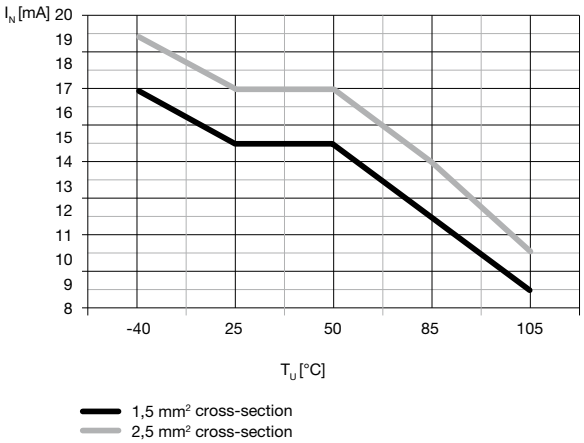

Control current for 12 V – 10 A / 17 A / 30 A variant

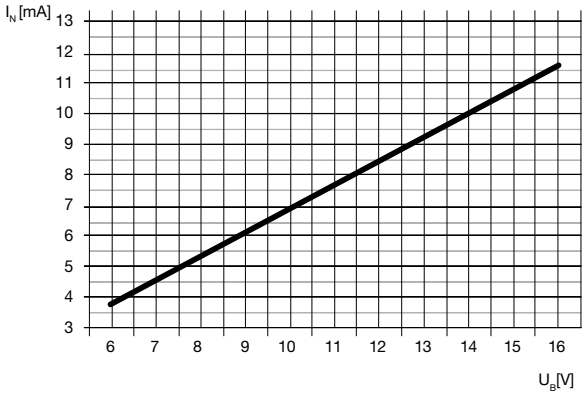

Control current for 24 V – 10 A / 17 A / 30 A variant

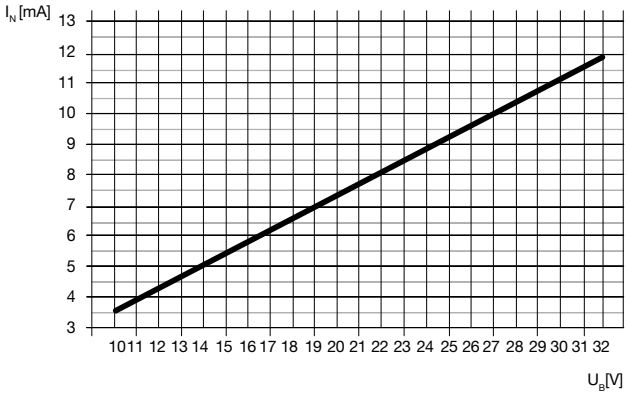

5

Frequency control 10 A

10 A / 12 V variant

Frequency measurement with 100 Hz

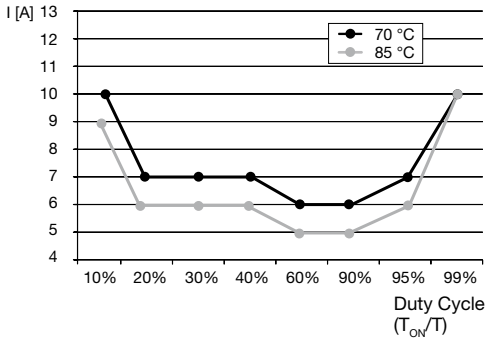

10 A / 24 V variant

Frequency measurement with 50 Hz

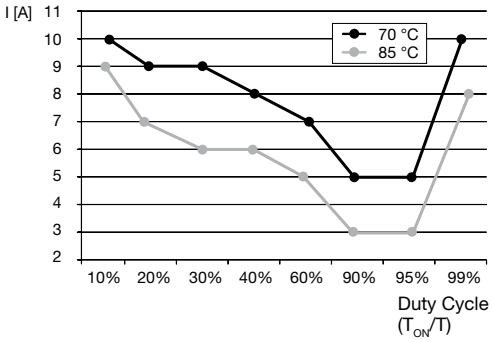

Frequency measurement with 150 Hz

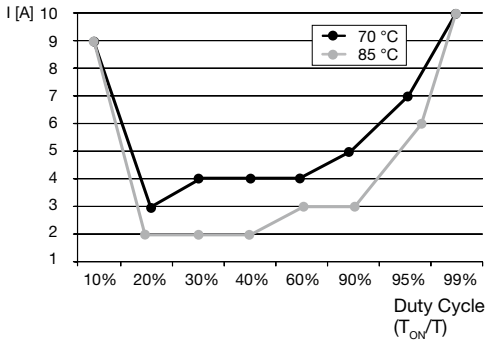

Frequency measurement with 100 Hz

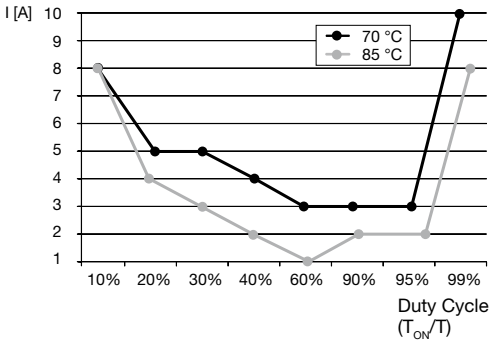

Frequency measurement with 200 Hz

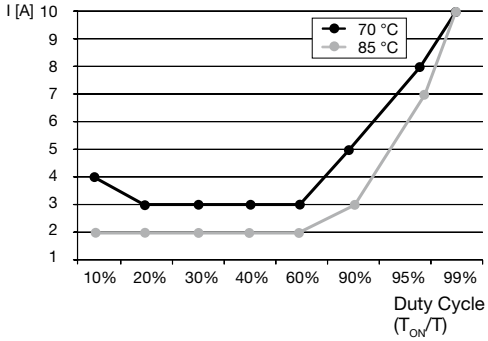

The max. load current depends on the load type. Please contact the manufacturer of the load if the limit values shown above are reached. E-T-A is able to test whether the relay works in the limit range.

Frequency control 17 A / 30 A

17 A / 12 V variant

Frequency measurement with 50 Hz

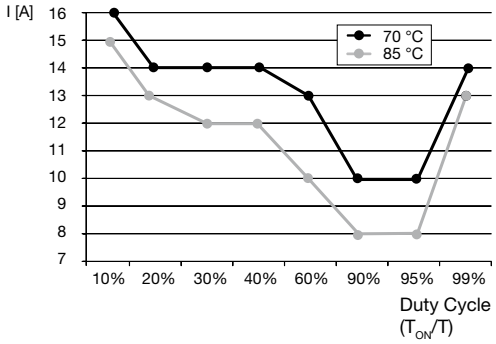

Frequency measurement with 100 Hz

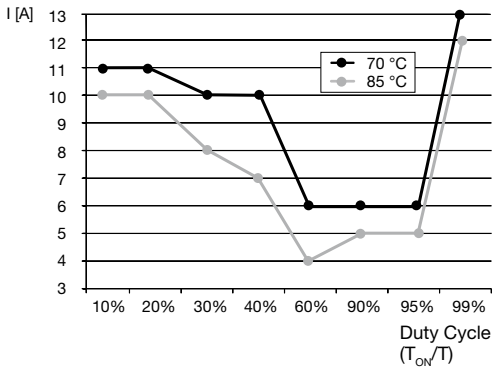

17 A / 24 V variant

Frequency measurement with 50 Hz

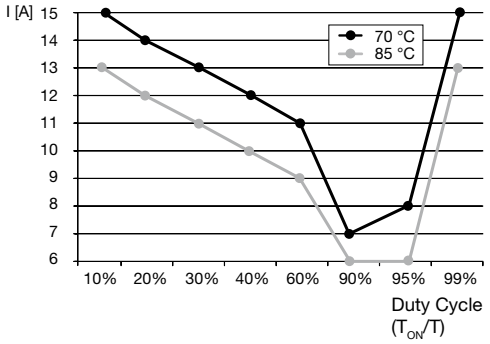

Frequency measurement with 100 Hz

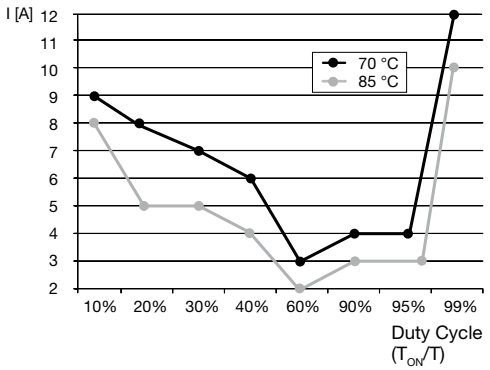

30 A / 12 V variant

Frequency measurement with 50 Hz

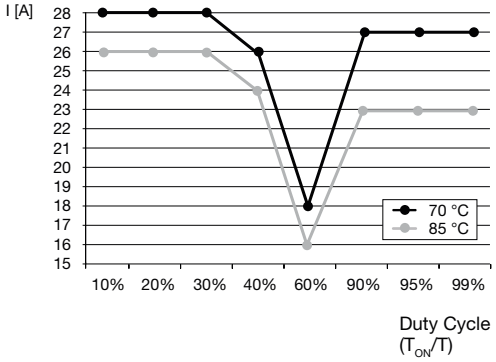

Frequency measurement with 100 Hz

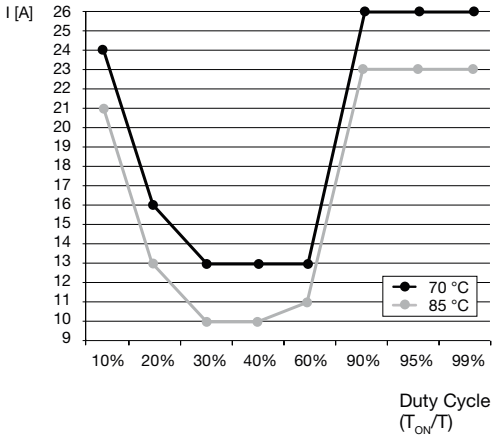

The max. load current depends on the load type. Please contact the manufacturer of the load if the limit values shown above are reached. E-T-A is able to test whether the relay works in the limit range.

5