SPECIFICATION FOR APPROVAL

REF : PAGE: 1

PROD. NAME	SMD POWER INDUCTOR	ABC'S DWG NO.	ESR0604□□□□L□-□□□
		ABC'S ITEM NO.	

Ⅰ．CONFIGURATION & DIMENSIONS：

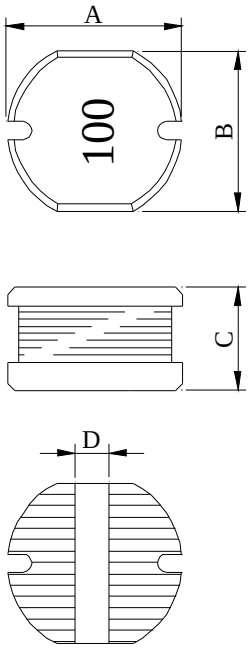

A	:	5.8±0.3	m/m
B	:	5.2±0.3	m/m
C	:	4.5±0.3	m/m
D	:	1.3 ref.	m/m
G	:	1.7 ref.	m/m
H	:	5.5 ref.	m/m
I	:	6.0 ref.	m/m

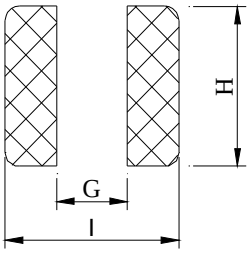

(PCB Pattern)

Ⅱ．SCHEMATIC DIAGRAM：

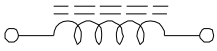

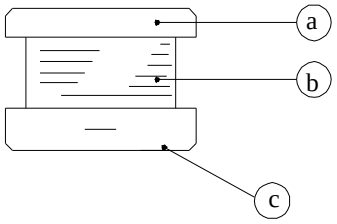

Ⅲ．MATERIALS：

a．Core：Ferrite DR core

b．Wire ：Enamelled copper wire (Class F & H)

c．Terminal： Ag/Ni/Sn

d．Remark：Products comply with RoHS' requirements

Ⅳ．GENERAL SPECIFICATION：

a．Storage temp.：-40℃ ----+125℃

b．Operating temp.：-40℃----+105℃

c．Resistance to solder heat：245±5℃.10 secs.

Peak Temp：245±5℃

Max time above 200℃ ：60sec max.

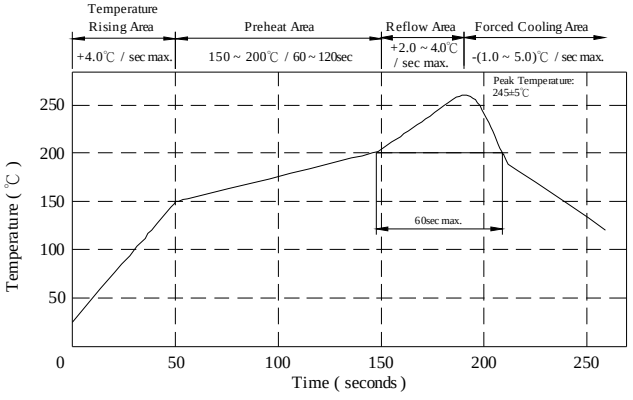

千如電子集團 ABC ELECTRONICS GROUP.

SPECIFICATION FOR APPROVAL

PROD. NAME	SMD POWER INDUCTOR	ABC'S DWG NO.	ESR0604□□□□L□-□□□
		ABC'S ITEM NO.	

Ⅴ．ELECTRICAL CHARACTERISITCS：

DWG No.	Inductance (μH)	RDC (mΩ)		Rated Current (A)	SRF (MHz) ref.
		typ.	max.		
ESR0604100ML□ -□□□	10±20%	62	100	1.69	32.0
ESR0604120ML□ -□□□	12±20%	69	120	1.53	29.0
ESR0604150ML□ -□□□	15±20%	87	140	1.44	26.0
ESR0604180ML□ -□□□	18±20%	114	150	1.42	24.0
ESR0604220ML□ -□□□	22±20%	128	180	1.26	19.0
ESR0604270ML□ -□□□	27±20%	140	200	1.17	18.0
ESR0604330ML□ -□□□	33±20%	184	230	0.99	17.0
ESR0604390ML□ -□□□	39±20%	215	320	0.90	17.0
ESR0604470ML□ -□□□	47±20%	258	370	0.81	14.0
ESR0604560KL□ -□□□	56±10%	298	420	0.77	12.0
ESR0604680KL□ -□□□	68±10%	343	460	0.65	11.0
ESR0604820KL□ -□□□	82±10%	436	600	0.63	8.0
ESR0604101KL□ -□□□	100±10%	559	700	0.61	7.5
ESR0604121KL□ -□□□	120±10%	599	900	0.59	7.5
ESR0604151KL□ -□□□	150±10%	900	1100	0.52	7.0
ESR0604181KL□ -□□□	180±10%	986	1380	0.47	6.5
ESR0604221KL□ -□□□	220±10%	1222	1570	0.38	6.5

1). □：Packaging information… A: Bulk B: Taping Reel

2)."-□□□":Reference code

3). Inductance test condition :10uH~82uH at 1MHz/1V

100uH~220uH at 1KHz/1V

4). Rated current: The DC current at which the inductance decreases to 90% of it's initial value or when Δt=40℃,whichever is lower(Ta=20℃)

SPECIFICATION FOR APPROVAL

PROD. NAME	SMD POWER INDUCTOR	ABC'S DWG NO.	ESR0604□□□□L□-□□□
		ABC'S ITEM NO.	

Ⅵ．INDUCTANCE VS. DC CURRENT CURVE：

(1) Configuration

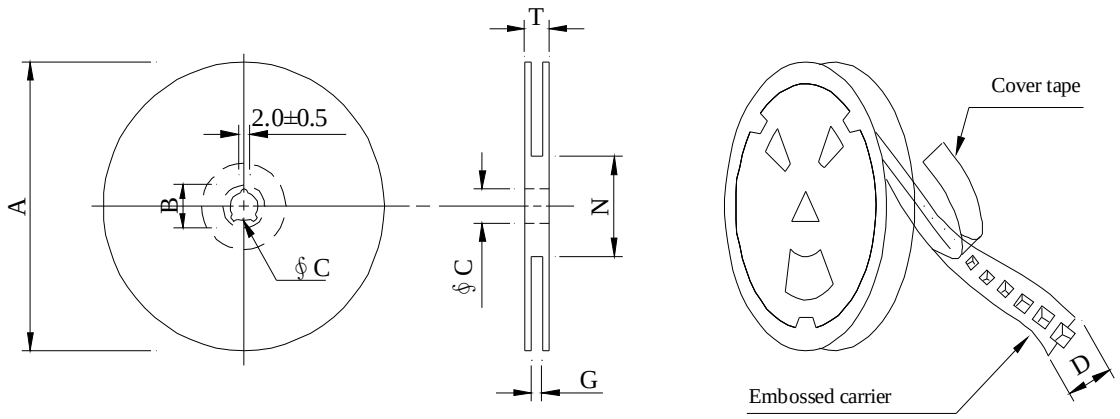

※Carrier tape width : D

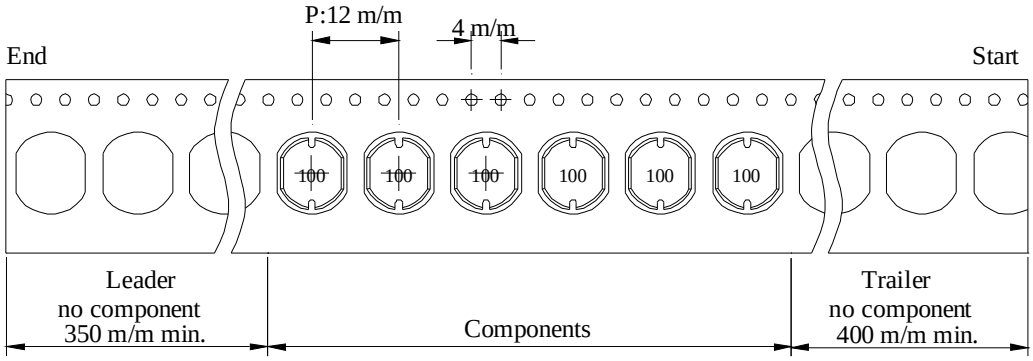

User direction of feed →

(2) Dimensions

Unit:m/m

Style	A	B	C	D	G	N	T
13 - 16	330	21±0.8	13±0.5	16	18^{+0}	50^{-0}	22.4

(3) Q'TY & G.W. Per package

Series	Inner : Reel			Outer : Carton		
	Q'TY (pcs)	G.W. (gw)	Style	Q'TY (pcs)	G.W. (Kg)	Size (cm)
ESR0604	1000	780	13 - 16	6,000	7.4	40 x 40 x 24

千如電子集團
ABC ELECTRONICS GROUP.

SPECIFICATION FOR APPROVAL

PROD. NAME	SMD POWER INDUCTOR	ABC'S DWG NO.	ESR0604□□□□L□-□□□
		ABC'S ITEM NO.	

Ⅶ．PACKAGING INFORMATION：

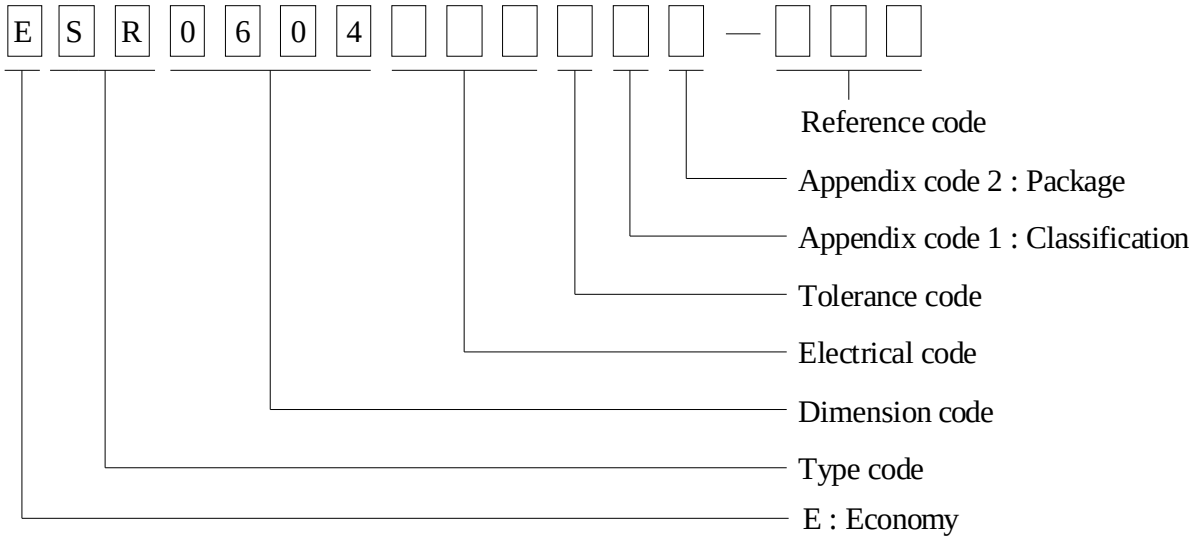

Appendix code 1：Product Classification

L：Lead Free Standard products comply with RoHS' requirements

1 ~ 9：Lead Free Special products comply with RoHS' requirements

Appendix code 2：Package Information

Code	Inner package	Inner package Q'TY	Remark
A	T.B.D.	T.B.D.	
B	T / R (Reel package)	1,000 pcs	

ABC 千如電子集團 ABC ELECTRONICS GROUP.

SPECIFICATION FOR APPROVAL

PROD. NAME	SMD POWER INDUCTOR	ABC'S DWG NO.	ESR0604□□□□L□-□□□
		ABC'S ITEM NO.	

Ⅷ．DWGING NUMBER EXPRESSION：

Test item	Specification	Test condition
Solderability	More than 95% of the terminal electrode Shall be covered With fresh solder.	Preheat : 155℃ / 4 hours. Solder : Sn96.5 / Ag3 / Cu0.5 or equivalent Solder temp. : 235±5℃ Flux : Rosin Dip time : 5±0.5 seconds
Thermal shock test (Temp. cycle)	Electrical oharacteristics shall not change more than ±20%	Room temp. / 15 minutes → -40 ℃ / 30 minutes Room temp. / 15 minutes → +105 ℃ / 30 minutes Total : 50 cycles
Humidity test		Temperature : 40±2℃ Humidity : 90±5% Time : 1000 hours
High temp. Resistance test		Temperature : 105±5℃ Applied current : Per spec. Time : 96 hours

ABC 千如電子集團 ABC ELECTRONICS GROUP.

SPECIFICATION FOR APPROVAL

PROD. NAME	SMD POWER INDUCTOR	ABC'S DWG NO.	ESR0604□□□□L□-□□□
		ABC'S ITEM NO.	

Ⅸ．RELIABILITY TEST：

OBMW2 September 8, 2000

Magnet Wire-Component

JUNG SHING WIRE CO LTD E174837
231 CHUNG CHENG RD, SEC 3 JEN-TEH HSIANG, TAINAN
HSIEN TAIWAN

Mtl Dsg	Mark Dsg	Coat Typ BC	Coat Typ OC	ANSI Type	Temp Class
AIW	——	Polyamideimide	——	MW81-C	220
CFUEWB	——	Polyurethane	——	MW75C	130
EIAIW	——	Polyesterimide	Polyamideimide	MW35C	200
EILOCKY	——	Polyesterimide	Polyamide	——	180
EILOCKW	——	Polyesterimide	Modified Epoxy	——	200
EIW	——	Polyesterimide	——	——	220
EIW-2	——	Polyesterimide	——	MW74-C	200
FL.EILOCKY	——	Modified Polyester	Polyamide	——	155
LSFFW	——	Polyurethane	——	MW79-C	155
LSUEW	——	Polyurethane	——	——	130
PEW	——	Polyester	——	——	155
PEY	——	Polyester	Nylon	MW24-C	155
SF.FLW	——	Modified Polyester	——	MW26C	155
SF.EIW	——	Polyesterimide	——	MW77C	180
SF.BY@	——	Modified Polyester	Nylon	MW27-C	155
SF.FLY@	——	Modified Polyester	Nylon	MW27-C	155
SF.BLOCKBS	——	Modified Polyester	Modified Polyamide	——	155
SF.EILOCKY#	——	Polyesterimide	Polyamide	——	180
SF.EILOCKBS	——	Polyesterimide	Modified Polyamide	——	180
SF.BW@	——	Modified Polyester	——	MW26C	155
SFFW	——	Polyurethane		MW79	155

287806002 Page 1 of 2

A not-for-profit organization dedicated to public safety and committed to quality service

Mtl Dsg	Mark Dsg	Coat Typ BC	Coat Typ OC	ANSI Type	Temp Class
SFFY	——	Polyurethane	Polyamide	MW80C	155
UEW-1	——	Polyurethane	——	MW2-C	105
UEW-2	——	Polyurethane	——	——	130
UEW-4	——	Polyurethane	——	MW75C	130
UEY	——	Polyurethane	Nylon	MW28-C	130
UEY-2	——	Polyurethane	Polyamide	MW28-C	130

@-May be suffixed by LZ; # - May be suffixed by LZ, EL or LZI.
LZ - Signifies magned wires twisted together; EL - signifies base coated magnet wire laid parallel with top coat applied overall; LZL - signifies base coated magnet wire twisted together and covered with top coat overall.

Marking: Company name or trademarks JSW or 榮星電線 , material designation or marked designation on packaed or reel, and Recognized Component Mark.

See General Information Preceding These Recognitions
For use only in equipment where the acceptability of the combination is determined by Underwriters Laboratories Inc.

287806002 Page 2 of 2 OBMW2/E174837
September 8 , 2000

SPECIFICATION FOR APPROVAL

PROD. NAME	SMD POWER INDUCTOR	ABC'S DWG NO.	ESR0604□□□□L□-□□□
		ABC'S ITEM NO.	

OBMW2 October 06, 2005

Magnet Wire-Comporent

ELEKTRISOLA (MALAYSLA) SDN BHD E143312
JALAN DAMAI SATU JANDA BAIK 28750 BENTONG, PAHANG
DARUL MAKMUR MALAYSIA

Mtl Dsg	Mark Dsg	Coating Type BC	Coating Type OC	ANSI Typ	Temp Class
Estersol 180	E180	Polyesterimide (solderable)	——	MW-77	180
Amldester 200	A200	Polyesterimide	——	MW-74	200
Polysol-N 155	PN155	Polyurechane	Nylon	MW-80, MW-28	155, 130
Polysol 155	P155, G155	Polyurechane	——	MW-79, MW-75	155, 130
Polysol 155g	Pg155	Polyurechane	——	MW-75	130
Polysol 155p	Pp155,Gp155	Polyurechane	——	MW-79	155
Polysol 160	P160	Polyurechane	——	MW-79	155
Polysol 180	P180,G180	Polyurechane	——	MW-82 MW-79	180 155
Polysol 170	P170 or G170	Polyurechane	——	MW-79	155
Polysol-N 180	PN180	Polyurechane	Nylon	MW-83	180
Polysol P155p	P155p		——	MW-79	155

Marking：Company name, material designation or marked designation and factory identification on package ok reel

See General Information preceding These Recognitions

For use only in equipment where the acceptability of the combination is determined by Underwriters Laboratories Inc.