ES5108 3 1/2 Digit ADC with serial output

Features

- Multi-function measurement system :
  - Analog to digital converter.
  - Short circuit beeper.
  - Frequency counter.
- Frequency counter, auto range from 2KHz to 20MHz
- Low battery detector.
- Display hold and Max/Min.
- Triplex LCD display.
  - Full 3 1/2-Digit Display.
  - Annunciators—Hold, Max/Min, KHz, MHz, Low-bat, Continuance.
  - 1 annunciator drive pin for unit display.
  - 3 decimal point drivers with 3 independent control pins.
  - Polarity driver.
  - Displays "OL" for input over range.
- Provides serial data output.
- Guaranteed zero reading with zero input.
- True polarity indication for precision null detection.
- Convenient 9V battery operation.
- Low noise A/D converter:
  - Differential inputs, 1pA bias current.
  - Differential reference for ratiometric ohms.
  - On-chip voltage reference, $60ppm/°C$ drift.
  - Low linearity error.

Description

The ES5108 is design for 3 1/2-Digit Digital Multimeter which combines an integrated A/D converter, MAX/MIN, hold, short circuit beeper, low battery detector, a frequency counter, and serial data output.
A 'HOLD' input allows the ES5108 to hold the current A/D readout or frequency readout. The frequency counter is auto-ranging from 2KHz to 20MHz over a five decade range with KHz and MHz annunciators.
Short circuit beeper will sound whenever the readout is less than 30 after enabling the short circuit beeper. This feature is useful in detecting short circuits without watching the LCD.
The ES5108 provides 3 independent decimal point driving pins for the manufacturer to determine which decimal point or unit is display, the 3 decimal point drivers are built-in ES5108.

Application

Digital panel meters, digital multimeters, thermometers, capacitance meters, pH meters, photometers, etc.

Block Diagram

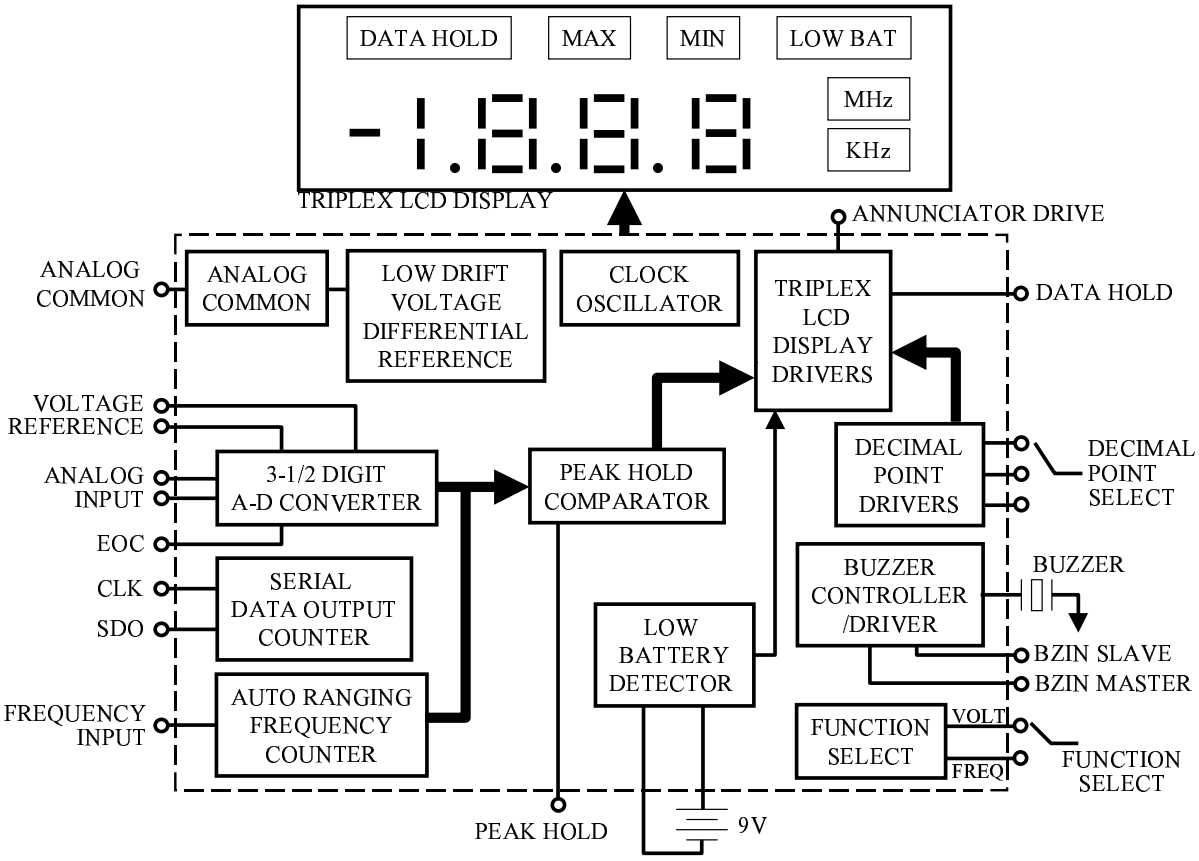

Pin Assignment

1 QFP-48pin

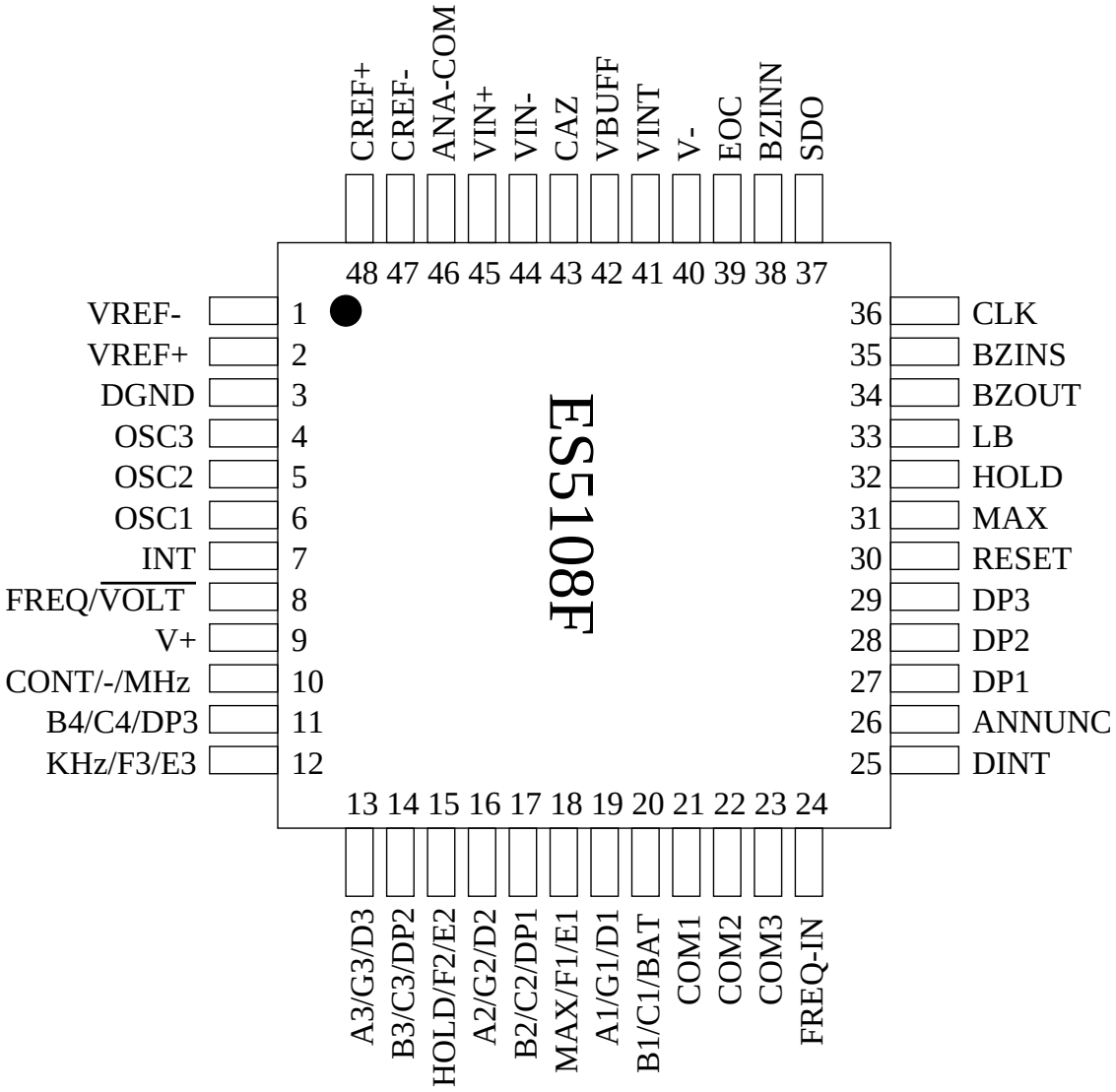

2 SSOP-48pin

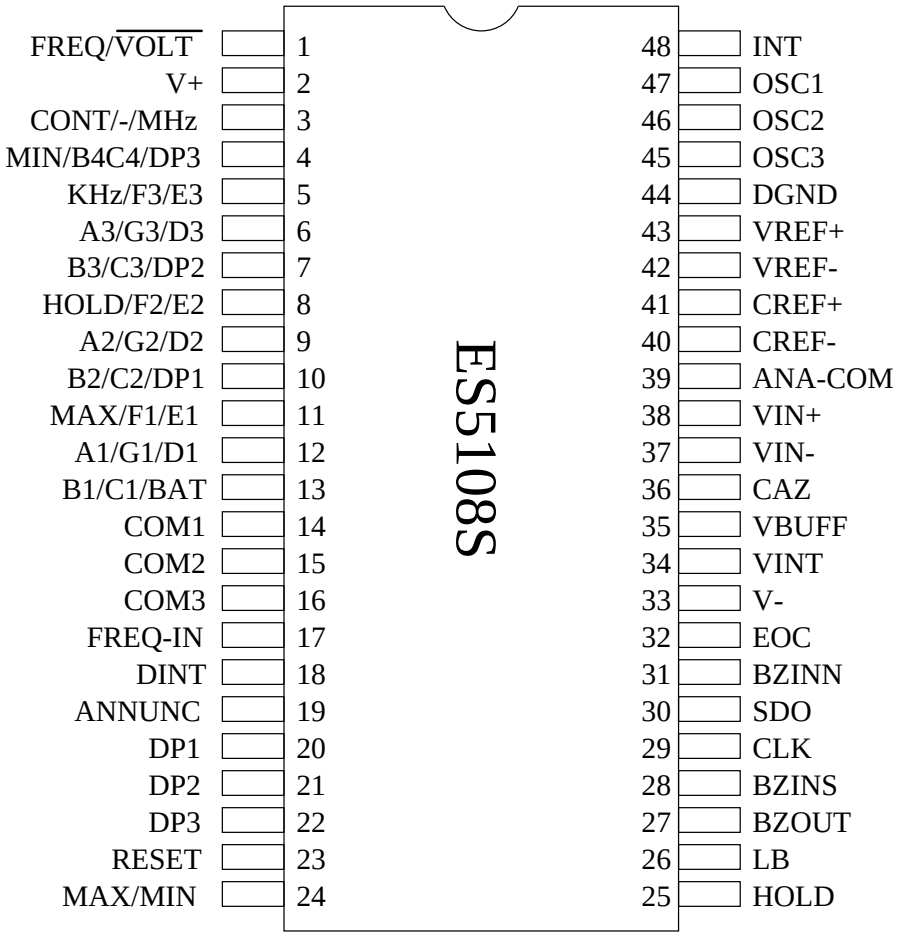
ES5108S
FREQ/$\overline{\text{VOLT}}$ 1
V+ 2
CONT/-/MHz 3
MIN/B4C4/DP3 4
KHz/F3/E3 5
A3/G3/D3 6
B3/C3/DP2 7
HOLD/F2/E2 8
A2/G2/D2 9
B2/C2/DP1 10
MAX/F1/E1 11
A1/G1/D1 12
B1/C1/BAT 13
COM1 14
COM2 15
COM3 16
FREQ-IN 17
DINT 18
ANNUNC 19
DP1 20
DP2 21
DP3 22
RESET 23
MAX/MIN 24
48 INT
47 OSC1
46 OSC2
45 OSC3
44 DGND
43 VREF+
42 VREF-
41 CREF+
40 CREF-
39 ANA-COM
38 VIN+
37 VIN-
36 CAZ
35 VBUFF
34 VINT
33 V-
32 EOC
31 BZINN
30 SDO
29 CLK
28 BZINS
27 BZOUT
26 LB
25 HOLD

Pin Description

Pin No.	Symbol	Type	Description
1	VREF-	-	Low differential reference input connection.
2	VREF+	-	High differential reference input connection.
3	DGND	-	Pull high to V+ all LCD segments will be activated.
4	OSC3	-	Crystal oscillator connection.(RC)
5	OSC2	-	Crystal oscillator connection.(input)
6	OSC1	-	Crystal oscillator connection.(output)
7	INT	O	Integration status flag.
8	FREQ/VOLT	I	Frequency counter/voltage measurement select pin. Connecting to V+ will enable the frequency counter, connecting to TEST1 or open will execute voltage measurement. This pin is internally pull down to TEST1.
9	V+	P	Positive supply voltage.
[1] 10	CONT/-/MHz	O	LCD segment drive. (Continuity., polarity, MHz)
11	B4/C4/DP3	O	LCD segment drive. (B4, C4, decimal point3)
12	KHz/F3/E3	O	LCD segment drive. (KHz, F3, E3)
13	A3/G3/D3	O	LCD segment drive. (A3, G3, D3)
14	B3/C3/DP2	O	LCD segment drive. (B3, C3, decimal point2)
15	HOLD/F2/E2	O	LCD segment drive. (Data Hold, F2, E2)
16	A2/G2/D2	O	LCD segment drive. (A2, G2, D2)
17	B2/C2/DP1	O	LCD segment drive. (B2, C2, decimal point 1)
18	MAX/F1/E1	O	LCD segment drive. (Max, F1, E1)
19	A1/G1/D1	O	LCD segment drive. (A1, G1, D1)
20	B1/C1/BAT	O	LCD segment drive. (B1, C1, low battery)
21	COM1	O	LCD common drive#1.
22	COM2	O	LCD common drive#2.
23	COM3	O	LCD common drive#3.
24	FREQ-in	I	Frequency counter input pin.
25	DINT	O	De-Integration status flag.
26	ANNUNC	O	Square wave output at the LCD backplane frequency, synchronized to COM1. Connecting an LCD segment to ANNUNC pin turns it on; connecting to backplane turns it off.
27	DP1	I	1st decimal point selection input for voltage measurement, internally pulled-down to TEST1.
28	DP2	I	2nd decimal point selection input for voltage measurement, internally pulled-down to TEST1.
29	DP3	I	3rd decimal point selection input for voltage measurement, internally pulled-down to TEST1.
30	RESET	I	Reset input pin. Connecting to V+ will cancel both MAX/MIN and Hold functions.
31	MAX	I	MAX input pin. Pulse to V+ to enable MAX function.
32	HOLD	I	Hold input pin. Connecting to V+ for hold function.
33	LB	O	Low battery flag. Pull high if low battery.
34	BZOUT	O	Piezo buzzer output. Driving a buzzer at 2.5KHz audio frequency.
35	BZINS	I	Buzzer control slave input.
36	CLK	I	External clock input pin for serial data accessing.
37	SDO	O	Serial data output pin.

continued on next page. . .

* This table is for ES5108F

. . .continued from previous page			
Pin No.	Symbol	Type	Description
38	BZINM	I	Buzzer control master pin.
39	EOC	O	End of conversion indicator.
40	V-	P	Negative supply voltage. Connecting to battery negative terminal.
41	VINT	-	Integrator output.
42	VBUFF	-	Integration register connection.
43	CAZ	-	Auto-zero capacitor connection.
44	VIN-	I	Analog low input signal.
45	VIN+	I	Analog high input signal.
46	ANA-COM	O	Set the common-mode voltage for the system.
47	CREF-	-	Negative capacitor connection for on-chip A/D converter.
48	CREF+	-	Positive capacitor connection for on-chip A/D converter.

Note:
1. -/MHz for ES5108S

Absolute Maximum Ratings

Characteristic	Rating
Supply Voltage (V+ to V-)	12V
Analog Input Voltage (either input)	V+ to V-
Reference Input Voltage (either input)	V+ to V-
Clock Input	DGND to V+
Power Dissipation(plastic package)	800mW
Operating Temperature	0°C to +70°C
Storage Temperature	−65°C to 160°C
Lead Temperature (soldering, 10sec)	270°C

Electrical Characteristics

Parameter	Symbol	Test Condition	Min.	Typ.	Max.	Units
DC Characteristics Zero Input Reading	–	$V_{IN} = 0.0V$, full-scale=200.0mV	-000.0	±000.0	+000.0	Digital Reading
Ratiometric Reading	–	V_{IN}=V_{REF}, V_{REF}=100mV	999	999/1000	1000	Digital Reading
Linearity (Max. deviation from best straight line fit)	–	full-scale=200mV or full-scale=2.000V	-1	±0.2	1	Counts
Roll-over Error	–	$-V_{IN}$=+V_{IN} ∼ 200.0mV	-1	±0.2	+1	Counts
Common Mode Rejection Ratio	–	V_{CM}=±1V,V_{IN}=0V Full-Scale=200.0mV	–	50	–	μV/V
Low battery flag	–	V+ to V-	6.6	6.9	7.2	V
Noise	–	$V_{IN} = 0V$, full-scale=200.0mV	–	15	–	μVp-p
Input Leakage Current	–	$V_{IN} = 0V$	–	1	10	pA
Zero Reading Drift	–	$V_{IN} = 0V$, 0°C≤T_A ≤+70°C	–	0.2	1	μV/°C

continued on next page. . .

. . .continued from previous page						
Parameter	Symbol	Test Condition	Min.	Typ.	Max.	Units
Analog COMMON Voltage (with respect to V^+)	–	25KΩ Between Common and Positive Supply	2.8	3.0	3.2	V
Analog COMMON Temperature Cofficient	–	25KΩ Between Common and V^+,0°C≤TA≤ 70°C	–	60	75	ppm/°C
Segment Drive Voltage	–	V^+ to V^-=9V	4	5	6	V
Back plane Drive Voltage	–	V^+ to V^-=9V	4	5	6	V
Supply Current (Does not include COMMON current)	–	V_{IN}=0V	–	1.2	1.6	mA
Frequency counter input level	–	$V_{IH(V_{FRE})}$	$V^+ - 1.5$	–	–	V
		$V_{IL(V_{FRE})}$			DGND +1.5	
Input terminals : BZINM, BZINS, MAX/MIN, HOLD, RESET, FREQ/VOLT, CLK, DP1, DP2, DP3						
Input logic high voltage	–		$V^+ - 1.5$	–	–	V
Input logic low voltage	–				DGND +1.5	
Pull down current	–	V_{IN}=V^+	–	5	–	μA

AC Characteristics

Characteristics	Symbol	Min.	Typ.	Max.	Unit
LCD display frequency	F_{lcd}	–	167	–	Hz
Operating frequency	F_{clock}	–	40	–	KHz
Buzzer drive frequency	F_{bzout}	–	2.5	–	KHz
FREQ-IN Waveform Rising Time	T_{fr}	–	–	20	ns
FREQ-IN Waveform Falling Time	T_{ff}	–	–	20	ns
FREQ-IN Waveform Pulse Width	T_{pw}	17	–	–	ns
Clock Delay Time	T_d	1	–	5000	μs
Data Set-up Time	T_{ds}	–	–	500	ns
EOC Pulse Width	T_{eoc}	–	–	10	ms
Clock Pulse Width	T_{ck}	500	–	–	ns
MAX/MIN duration	T_{ph}	0.8	–	–	sec
MAX/MIN and HOLD Keys					
Key debounce time	T_{deb}	–	32	38	ms
Key hold time	T_{dh}	50	–	–	ms

3 Timing Waveforms

1.Frequency Counter Input Waveform

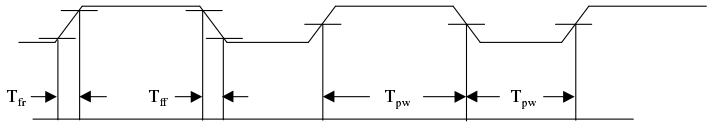

2.Serial Data Output

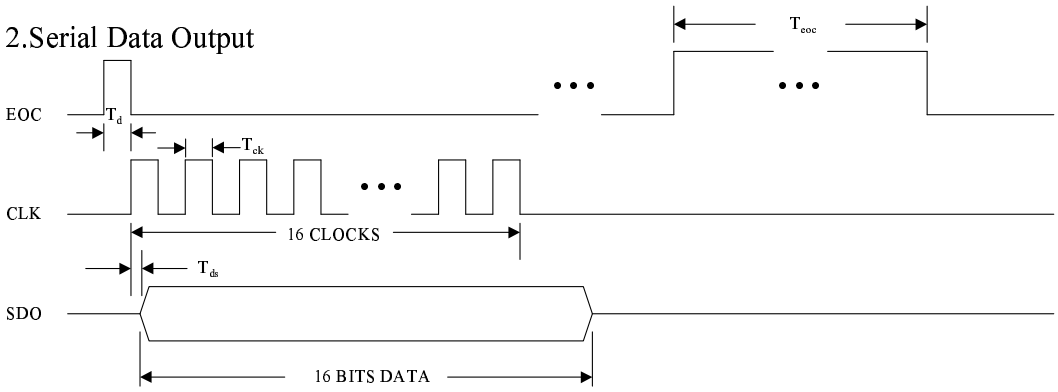

Functional Description

1 Analog Common

The Common pin is used to set the common-mod voltage for the system in which the input signals are floating with respect to the power supply of the ES5108. In most of the applications, VIN-, VREF- and COMMON pins are tied to the same point, so that the common mode voltage can be removed from the reference system and the converter. In some applictions, VIN- may not at the same point with COMMON and thus a common mode voltage exists in the system, The high CMRR(86db typical) of the ES5108 can take care of this common mode voltage. Nevertheless, it should be care to prevent the output of the integrator from saturation.

The COMMON pin is also used as a voltage reference. It sets a voltage of around 2.9 volts more negative than the positive supply. The COMMON voltage of ES5108 has a low output impedance of 15Ω typical.

The analog COMMON is tied internally to an N-channel FET capable of sinking 30mA. This FET will hold the COMMON voltage at 2.9 volts when an external load attempts to pull the COMMON voltage toward the positive supply.

The source current of COMMON is only 10μA, so it is easy to pull COMMON voltage to a more negative voltage with respect to the positive supply.

When the total supply voltage is large enough to cause the zener to regulate(>7V), the COMMON voltage will have a low temperature coefficient typically less than $60ppm/°$C. This voltage can be used to generate the ES5108 reference voltage and anexternal voltage reference will be unnecessary in most cases.

2 Reference Voltage

For a 1000 counts reading, the input signal must be equal to the reference voltage. As a result, it requires the input signal be twice the reference voltage for a 2000 counts full-scale reading. Thus, for the 200.0mV and 2.000V full-scale, the reference voltage should equal 100.0mV and 1.000V, In some applications the full-scale input voltage my be other than 200mV or 2V, but 600mV. For example, the reference voltage should be set to 300mV and the input signal can be used directly without being divided.

The differential reference can be used during the measurement of resistor by the ratiometric method and when a digital reading of zero is desired for $V_{in} \neq 0$. A compensating offset voltage can be applied between COMMON and VIN- and the voltage of being measured is connected between COMMON and VIN+.

3 System Timing

The oscillator frequency is divided by four prior to clocking the internal decade counters. The signal integrate takes a fixed 1000 counts time period which is equal to 4000 clock Pulses. The backplane drive signal is derived from dividing clock frequency by 240. To make a maximum rejection of line frequency(60Hz or 50Hz)noise pickup, the signal integrate period should be a multiple of the line frequency period. For 60Hz-noise rejection, oscillator frequencies of 120KHz, 80KHz, 60KHz, 48KHz, 40KHz, etc. should be selected. For 50Hz rejection, oscillator frequencies of 100KHz, 50KHz, 40KHz, etc. would be suitable.

For all ranges of frequency R_{osc} should be 100K Ω, C_{osc} is selected from the approximate equation f∼0.45/RC. For 48KHz clock (3reading/second), C_{osc}=100PF.

4 Integrating Resistor

The input buffer amplifier and integrator both have class A output stage with 100μA of quiescent current and can supply 20μA drive currents with negligible linearity errors. The integrating resistor should be chosen to remain in the output stage linear drive region. It should be noticed that the integrating resistor should not be so large such that the leakage currents of printed circuit board will induce errors. For a 200mV full-scale the recommended integrating resistor value is 47K Ω and for 2V full-scale is 470KΩ.

5 Integrating Capacitor

The integrating capacitor should be selected to maximize integrator output voltage swing without causing output saturation. If the analog COMMON is used as voltage reference, a±2V full-scale integrator output swing is satisfactory. For 3 readings/second (48KHz clock) a 0.22μF value of C_{INT} is suggested. When different oscillator frequencies are used, C_{INT} must be changed in inverse proportion to maintain the nominal ±2V integrator swing.

The integrating capacitor should have low dielectric absorption to minimize roll-over error. An inexpensive polypropylene capacitor will work well.

6 Auto-Zero Capacitor

The auto-zero capacitor size has some influence on system noise. A 0.47μF capacitor is recommended for 200mV full scale where noise is very important. A 0.047μF capacitor is adequate for 2V full-scale applications. A mylar type dielectric capacitor is adequate.

7 Reference Voltage Capacitor

When VIN- is tied to analog COMMON, a 0.1μF capacitor adequate to be the reference capacitor. If a large common-mod voltage exists and the application requires a 200mV full scale, a larger value is required to prevent roll-over error. A 1.0μF capacitor will hold the roll-over error to 0.5 count.

8 TEST

The TEST pin is tied to the internally generated digital supply. It's potential is 5V less than V^+. Thus TEST may be used as the negative power supply connection for externally generated segment drivers.

If TEST is pulled low to V^- all segments plus the minus sign will be activated and the display should read -1888. For such operation, the segment has a constant DC voltage and may destroy the LCD display if left in this mode for several minutes.

9 Frequency Counter

The ES5108 provides 2KHz to 2MHz five-decade auto-range frequency counter. In the counter mode, pulses at the FREQ-IN will be counted and displayed. The frequency counter derives its time base from the clock oscillator and gets one readout persecond. The frequency counter accuracy is determined by the oscillator accuracy. For accurate frequency measurement, a 40KHz quartz crystal oscillator is recommended.
The decimal points are automatically set to frequency mode.See following table :

FREQ-IN	Decimal point	Annunciator
0KHz to 1.999KHz	DP3	KHz
2.0KHz to 19.99KHz	DP2	KHz
20KHz to 199.9KHz	DP1	KHz
200KHz to 1999KHz	NONE	KHz
2.0MHz to 19.99MHz	DP2	MHz
20MHz or more	DISPLAY "OL"	

10 Hold, MAX and MAX/MIN

"Hold" function will hold the current readout and converter operation.
"MAX" function in ES5108F will display the maximum value.
"MAX/MIN" function in ES5108S has two mode : MAX and MIN. When the MAX/MIN is pressed for the first time, the meter displays the maximum value. When the MAX/MIN is pressed again, the meter displays the minimum value. The meter returns to normal mode if the MAX/MIN is pressed more then one seconds.

11 Serial data output

the ES5108 provides serial data output for use in connection with microcontrollers. During this operation, ES5108 uses CLK, SDO and EOC pins. The following is the timing diagram of this connection.
The EOC pin will be pulled HIGH at the end of conversion and the content of serial output data buffer will update simultaneously.
The waveform of EOC pin will go LOW as soon as CLK pin receives clock signal.Otherwise the EOC pin will stay HIGH and then go LOW in 10ms.
Serial data output format :

D15	D14	D13	D12	D11	D10	D9	D8	D7	D6	D5	D4	D3	D2	D1	D0
LSB															MSB

1. Voltage Mode :
   (a) D0(Polarity) : '1' for '+' and '0' for '-'
   (b) D1(MSD) : '1' for MSD = 1 and '0' for MSD = 0
   (c) D2 to D5 for 3rd LSD(from 0000 to 1001).
   (d) D6 to D9 for 2nd LSD(from 0000 to 1001).
   (e) D10 to D13 for 1st LSD(from 0000 to 1001).
   (f) D14 and D15 for decimal points bits : '00' for none, '01' for DP1, '10' for DP2, '11' for DP3.

2. Frequency Mode

(a) D0(KHz/MHz) : ’1’ for MHz and ’0’ for KHz.

Special data format

Items	D15...D6	D5	D4	D3	D2	D1	D0
Initial state(0000)	Random and don’t care	1	1	1	1	1	1
Positive Overflow(OL)	Random and don’t care	0	0	1	1	1	1
Negative Overflow(-OL)	Random and don’t care	0	0	1	1	1	0

12 LCD Segment Drivers

The ES5108 drives a triplex LCD with three commons. This LCD includes 3 1/2-digits, three decimal, points polarity sign and annunciators for peakhold, data-hold, continuity, frequency and low battery. The following figure indicates the assignments of the display segments to the commons and segment drive lines.

12.1 ES5108F

Pin No.	COM1	COM2	COM3
10	CONT	–	MHz
11	B4	C4	DP3
12	KHz	F3	E3
13	A3	G3	D3
14	B3	C3	DP2
15	HOLD	F2	E2
16	A2	G2	D2
17	B2	C2	DP1
18	MAX	F1	E1
19	A1	G1	D1
20	B1	C1	BAT
21	COM1	–	–
22	–	COM2	–
23	–	–	COM3

12.2 ES5108S

Pin No.	COM1	COM2	COM3
3	CONT	–	MHz
4	MIN	B4/C4	DP3
5	KHz	F3	E3
6	A3	G3	D3
7	B3	C3	DP2
8	HOLD	F2	E2
9	A2	G2	D2
10	B2	C2	DP1
11	MAX	F1	E1
12	A1	G1	D1
13	B1	C1	BAT
14	COM1	–	–
15	–	COM2	–
16	–	–	COM3

The LCD waveform is as follows

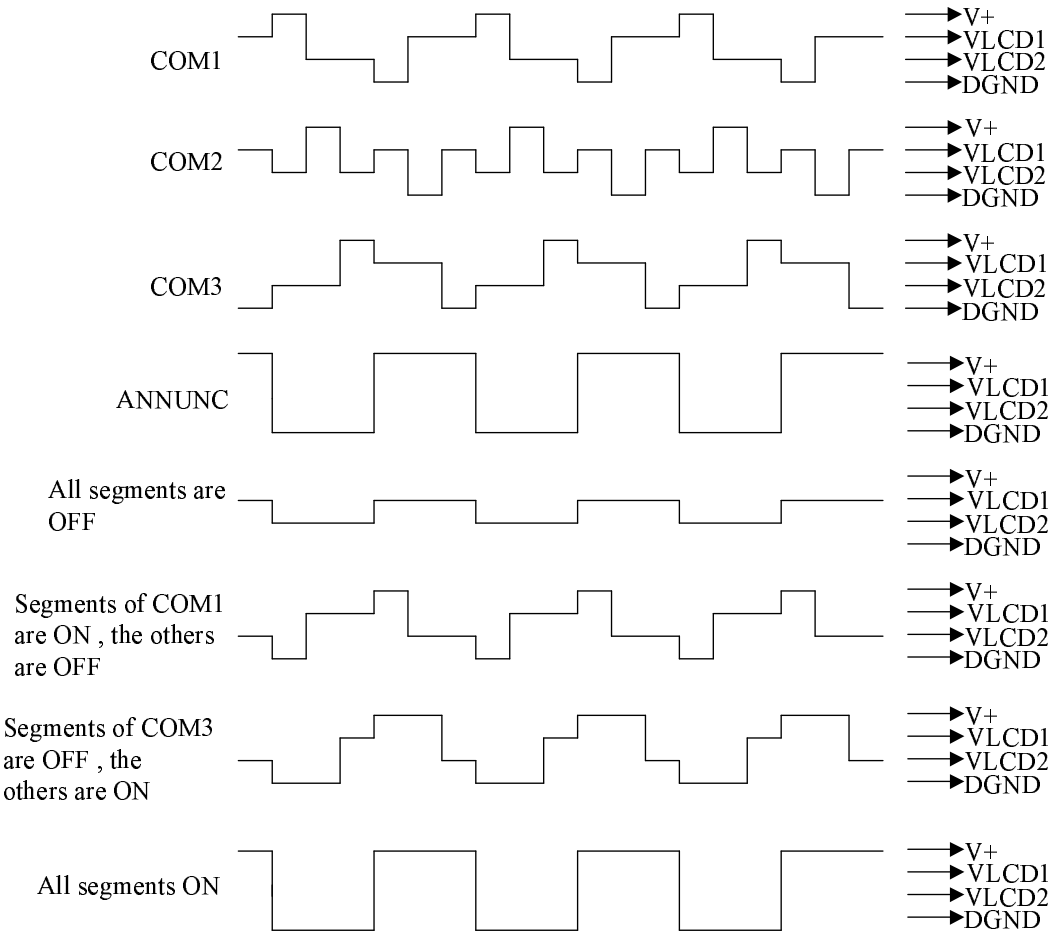

The annunciator output is a square wave running at the LCD backplane frequency (ex. 167Hz for F_{clock}=40KHz.) The pk-pk amplitude is equal to (V+ –DGND.) Connecting an annunciator of the LCD to the ANNUNC pin turns the annunciator on; connecting it to common turns it off.

Test Circuit

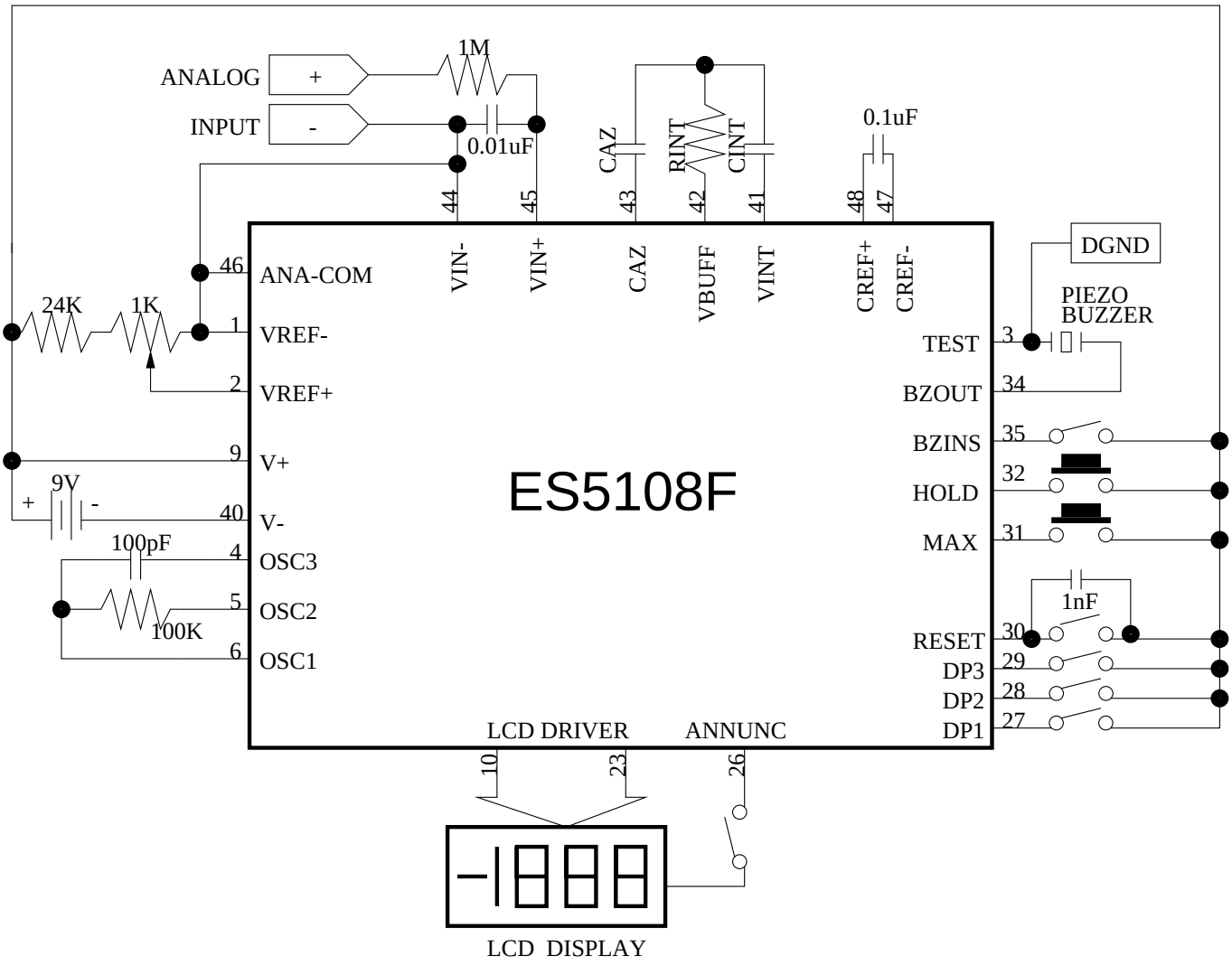

Application Circuit

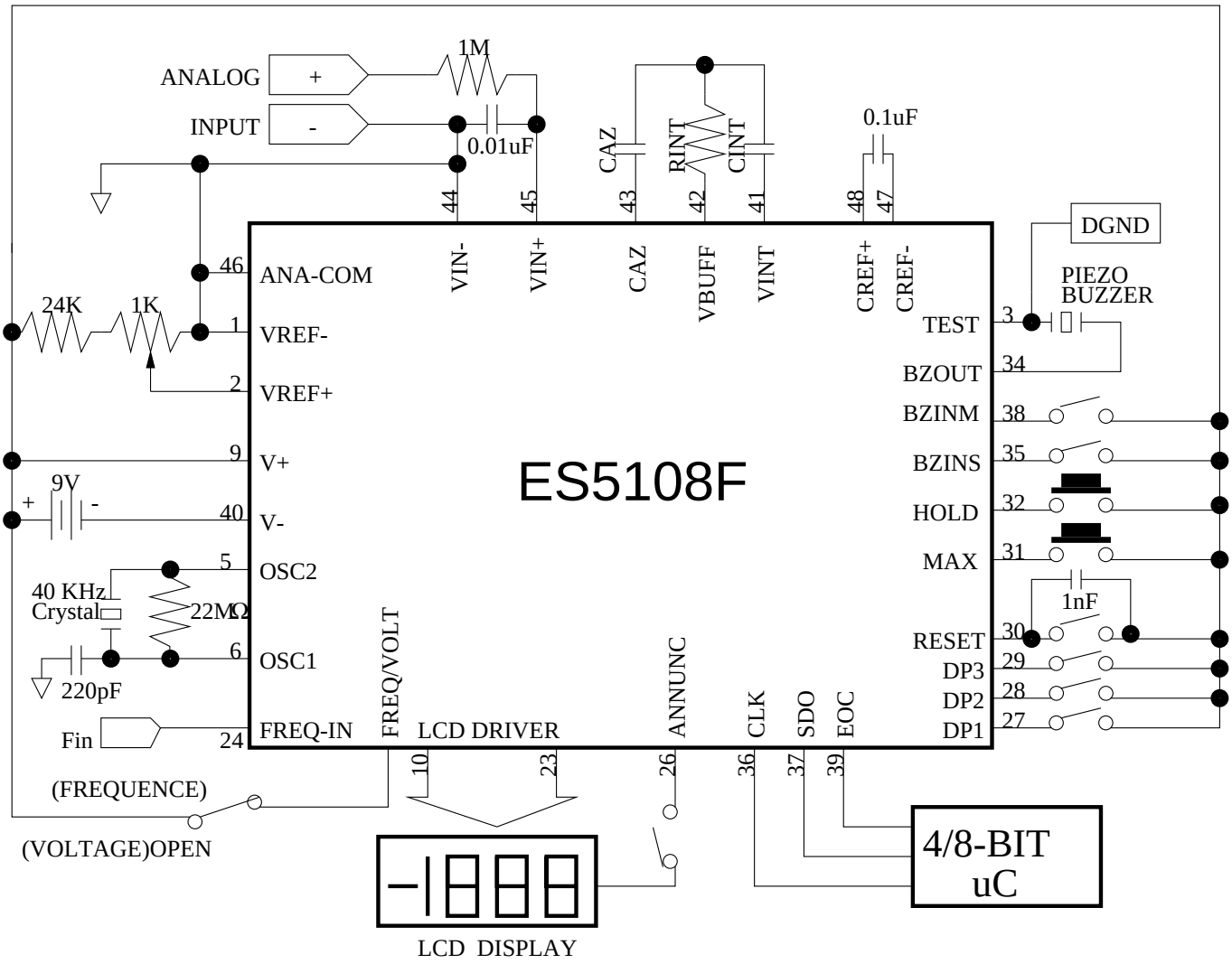

Packaging

1 QFP 48pin

unit : inches/mm

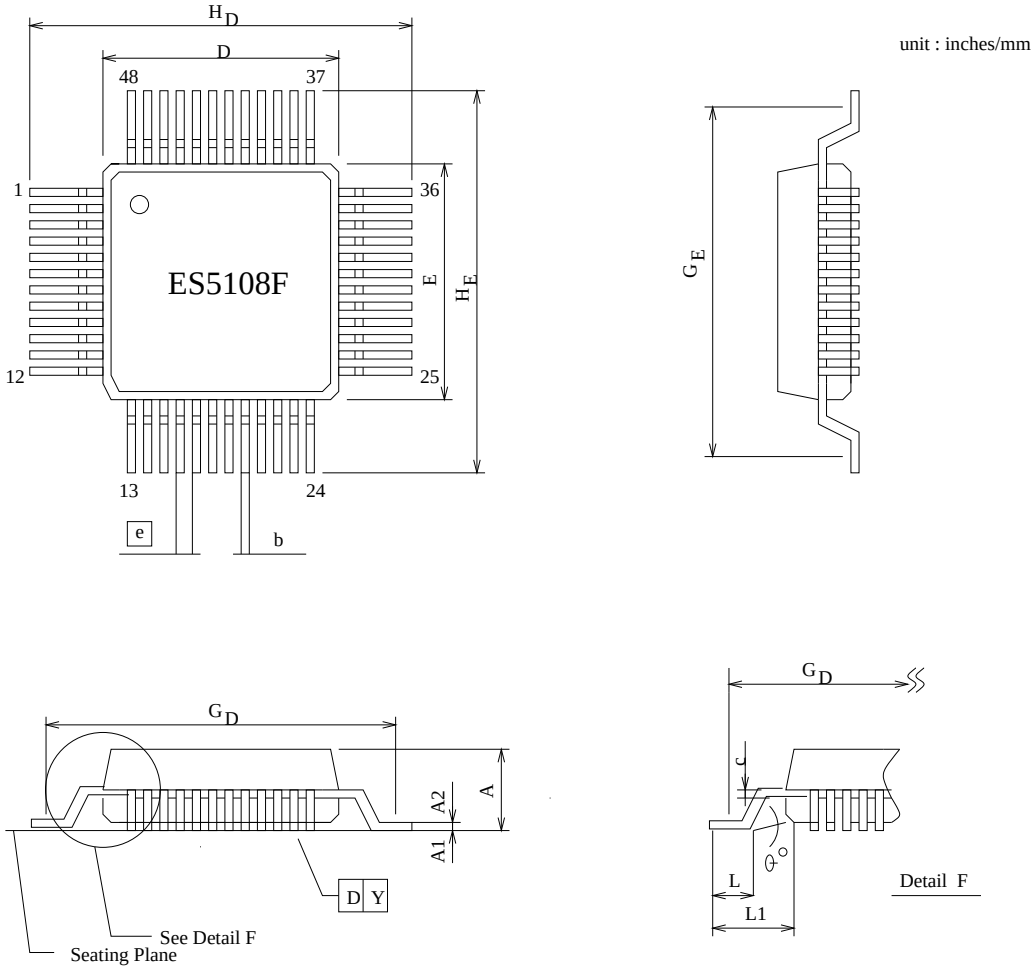

Symbol	Dimensions in inches	Dimensions in mm
A	0.089 Max	2.25 Max
A1	0.004 Min	0.10 Min
A2	0.079 ± 0.004	2 ± 0.10
b	0.013 + 0.004 - 0.002	0.33 + 0.10 − 0.05
c	0.006 + 0.004 -0.002	0.15 + 0.10 − 0.05
D	0.394 + 0.002	10.0 ± 0.05
E	0.394 ± 0.002	10.0 ± 0.05
e	0.030 ± 0.006	0.75 ± 0.15
G_D	0.524 Nom	13.3 Nom
G_E	0.524 Nom	13.3 Nom
H_D	0.590 ± 0.008	15.00 ± 0.20
H_E	0.590 ± 0.008	15.00 ± 0.20
L	0.067 ± 0.004	1.70 ± 0.10
L1	0.098 ± 0.004	2.50 ± 0.10
y	0.006 Max.	0.15 Max
θ	0° - 15°	0° - 15°

Note :
1. Dimensions D&E do not include resin lins.
2. Dimensions G_D &G_E are for PC Board surface mount pad pitch design reference only.