Features

- 6,000 counts LCD display with 31 analog bar-graph
- LQFP 128L package
- 3V DC power supply
- Slow ADC Conversion rate : 3 times/s
- Bar-graph ADC conversion rate : 30 times/s
- Full automatic measurement
  - ＊ Voltage measurement : 600.0mV, 6.000V – 1000V
  - ＊ Current measurement : μA/mA/A
  - ＊ Frequency with Voltage or Current :
  - ＊ Resistance measurement :
    60.00Ω – 60.00MΩ
  - ＊ Capacitance measurement :
    6.000nF – 60.00mF
    (Taiwan patent no.: 323347, 453443)
  - ＊ Capacitance measurement for Clampmeter mode :
    6.000nF – 60.00mF
  - ＊ Smart auto check for R / S / D / C mode
    Resistance : 0.0Ω – 6.000MΩ
    (Buz. On when R < 30Ω)
    Capacitance : 0.500nF – 600.0uF
    (Taiwan patent no.: 326361)
  - ＊ Not contact AC electric field detection
  - ＊ Frequency counter :
    600.0Hz – 60.00MHz
  - ＊ Duty cycle measurement :
    5% – 95% (< 10kHz)
- Diode measurement & continuity check
- Hazardous AC/DC voltage (HV) indication
- 4 ADP modes with external reference voltage and independent “ADP” user-defined segment on LCD
- Temperature mode with internal scale translation circuit from ^{0}C to ^{0}F
- K-type thermocouple reference table compensation (-200~1350 ^{o}C)
- Push functions :
  - ＊ Peak-hold function
  - ＊ VAHz function
  - ＊ MAX/MIN function
  - ＊ Relative function
  - ＊ Zero function: DCA clampmeter only
  - ＊ Back Light function
  - ＊ KEY function
  - ＊ Data Hold and delayed-hold function
  - ＊ Range change function
  - ＊ Semi-auto calibration operation
    (**Taiwan patent no.: 367334**)
- Low pass filter mode for ACA/ACV measurement (**Taiwan patent no.: 362409**)
- Band-gap reference voltage output
- Voltage overflow selection (DC / AC : 1010V, DC / AC : 610V)
- Serial data output (RS232 format)
- LCD segment check when power on
- Auto power off (30min / 15min)
- Sleep state indicative signal output
- Re-power on
- On-chip buzzer driver
- Low battery detection

▪ Description

ES238 is an integrated analog-to-digital converter with 6,000-count LCD with bar-graph display, automatic range selection, and 3V DC power supply. Automatic range selection is provided for ACV/DCV measurement, resistance measurement, current measurement, capacitance measurement, and frequency counter. Expensive and bulky mechanical range switches are not required. Other features include peak-hold function, relative value display, offset removing feature for DCA clamp mode, data holding, maximum and minimum value holding, duty cycle measurement, diode measurement, peak-hold function, temperature measurement, continuity checking, low battery detection, auto power off, re-power on, backlight driver, buzzer driver and RS232 data output.

Application

- Digital multimeter
- Clamp meter

Pin Assignment

- 128L LQFP package

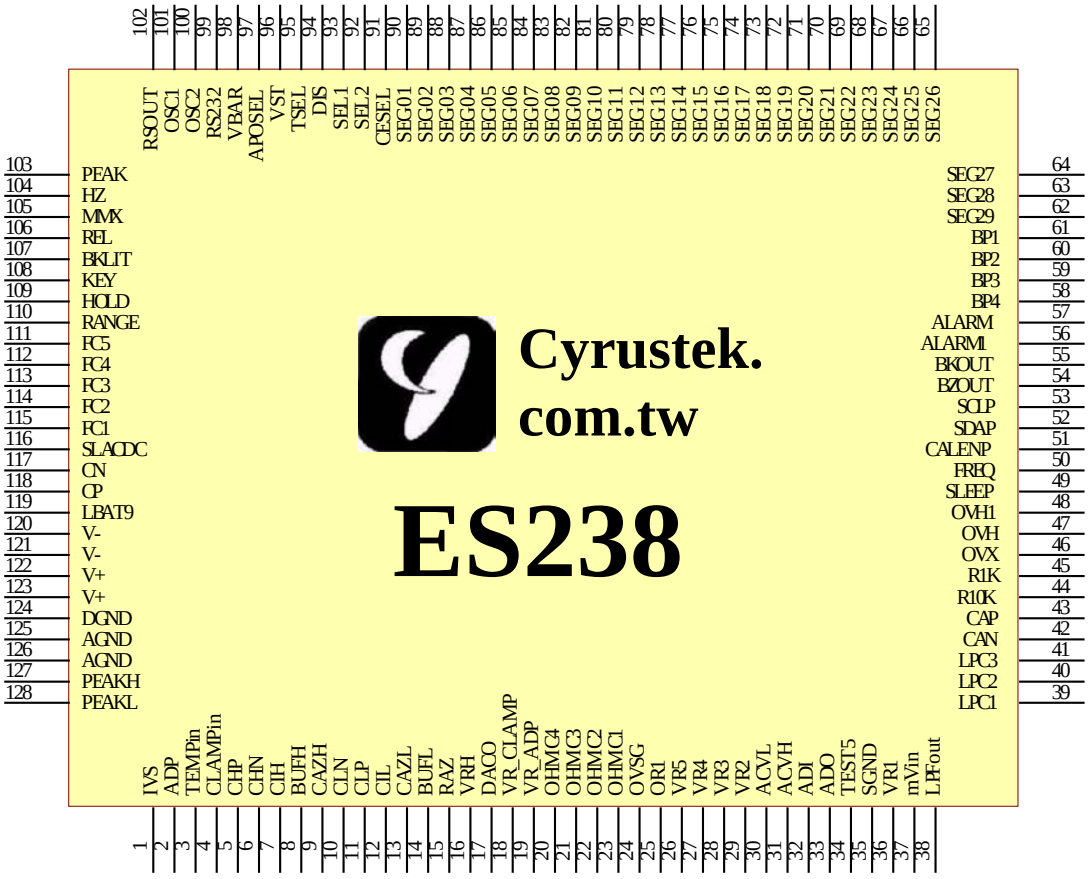

Pin Description

Pin No	Symbol	Type	Description
1	IVS	I	Measurement input in uA/mA current mode.
2	ADP	I	Measurement input in ADP mode.
3	TEMPin	I	Measurement input in Temperature mode.
4	CLAMPin	I	Current measurement input in CLAMP mode.
5	CHP	I / O	Positive connection for reference capacitor of high-speed A/D.
6	CHN	I / O	Negative connection for reference capacitor of high-speed A/D.
7	CIH	O	High-speed integrator output. Connect to integral capacitor.
8	BUFH	O	High-speed buffer output pin. Connect to integral resistor.
9	CAZH	O	High-speed auto-zero capacitor connection.
10	CLN	I / O	Negative connection for reference capacitor of high-resolution A/D.
11	CLP	I / O	Positive connection for reference capacitor of high- resolution A/D.
12	CIL	O	High-resolution integrator output. Connect to integral capacitor. (Metalized Polypropylene Film Capacitor type is recommended)
13	CAZL	O	High-resolution auto-zero capacitor connection.
14	BUFL	O	High-resolution buffer output pin. Connect to integral resistor
15	RAZ	O	Buffer output pin in AZ and ZI phase.
16	VRH	O	Output of band-gap voltage reference. Typically –1.23V.
17	DACO	O	Output of band-gap voltage reference. Typically –400 m V.
18	VR_CLAMP	I	Reference input voltage connection. Typically –400 mV.
19	VR_ADP	I	Reference input voltage connection. Typically –400mV.
20	OHMC4	O	Filter capacitor connection for resistance mode.
21	OHMC3	O	Filter capacitor connection for resistance mode.
22	OHMC2	O	Filter capacitor connection for resistance mode.
23	OHMC1	O	Filter capacitor connection for resistance mode.
24	OVSG	O	Sense low voltage for resistance/voltage measurement
25	OR1	O	Reference resistor connection for 60.00/600.0Ω range
26	VR5	O	Voltage measurement ÷10000 attenuator(1000V)
27	VR4	O	Voltage measurement ÷1000 attenuator(600.0V)
28	VR3	O	Voltage measurement ÷100 attenuator(60.00V)
29	VR2	O	Voltage measurement ÷10 attenuator(6.000V)
30	ACVL	I	Rectified signal low input in ACV/ACA mode. Connect to negative output of external AC to DC converter.
31	ACVH	I	Rectified signal high input in ACV/ACA mode. Connect to positive output of external AC to DC converter.
32	ADI	I	Negative input of internal AC to DC OP Amp.
33	ADO	O	Output of internal AC to DC OP Amp.
34	TEST5	O	Buffer output of OVSG.
35	SGND	I	Signal Ground input.
36	VR1	I	Measurement Input. Connect to a precised 10MΩ resistor.

Pin Description (Continued)

Pin No	Symbol	Type	Description
37	mVin	I	Measurement input in 600.0mV mode.
38	LPFout	O	Capacitor C1 connection for internal low-pass filter.
39	LPC1	O	Capacitor C1 connection for internal low-pass filter.
40	LPC2	O	Capacitor C2 connection for internal low-pass filter.
41	LPC3	O	Capacitor C3 connection for internal low-pass filter.
42	CAN	I / O	Negative auto-zero capacitor connection for capacitor measurement.
43	CAP	I / O	Positive auto-zero capacitor connection for capacitor measurement.
44	R10K	O	Connect to a precised 10KΩ resister for capacitor measurement.
45	R1K	O	Connect to a precised 1KΩ resister for capacitor measurement.
46	OVX	I	Sense input for resistance / capacitance measurement.
47	OVH	O	Output connection for resistance measurement.
48	OVH1	O	Output connection for resistance measurement. (Optional)
49	SLEEP	O	Sleep mode indicator, asserts low in SLEEP mode.
50	FREQ	I	Frequency counter input, offset V-/2 internally by the chip.
51	CALENP	I	Pulled to V- to enable the calibration scheme.
52	SDAP	I / O	Input / Output from to EEPROM 24LC02 data.
53	SCLP	O	Output to EEPROM 24LC02 clock.
54	BZOUT	O	Outputs a 2KHz audio frequency signal for driving piezoelectric buzzer
55	BKOUT	O	If BKLIT function is enabled, this pin will change from V- to V+ for 300 sec. Once press BKLIT pin again within 300 sec, this pin will change back to V-.
56	ALARM1	O	Short circuit indication output.
57	ALARM	O	HV signal detection in Voltage mode and EF mode indication output.
58	BP4	O	LCD backplane 4.
59	BP3	O	LCD backplane 3.
60	BP2	O	LCD backplane 2.
61	BP1	O	LCD backplane 1.
62 - 90	SEG29 - SEG01	O	LCD segment line 01 – 29.
91	CESEL*	I	Voltage OL selection feature control pin. (1010V/610V)
92	SEL2*	I	Diode OL level and HV indication selection pin.
93	SEL1*	I	Set current mode OL level selection pin. (DMM or Clamp mode)
94	DIS*	I	Control warning buzzer output at LPF and HV mode
95	TSEL*	I	Temperature mode controls the automatic mode or manual mode and enable or disable input terminal symbol displayed on the LCD panel selection pin.
96	VST*	I	Enable the auto range voltage mode to start from 600.0V or disable ADP input terminal symbol displayed on the LCD panel selection pin.
97	APOSEL	I	Idle time selection for auto power off feature.
98	VBAR	I	In μA or mA modes, it is used to control the ‘μ’ or ‘m’ sign. Set to V- to enable clamp current mode.

Pin Description (Continued)

Pin No	Symbol	Type	Description
99	RS232	I	Assert low (V-) to make serial data output function not available.
100	OSC2	O	Crystal oscillator output connection.
101	OSC1	I	Crystal oscillator input connection.
102	RSOUT	O	Serial data output.
103	PEAK	I	Pulse to V- to enable the PEAK Hold function.
104	HZ	I	Pulse to V- to enable VAHZ mode or duty cycle measurement in Freq. mode.
105	MMX	I	Pulse to V- to enable MAX/MIN function.
106	REL	I	Pulse to V- to enable/disable Relative function or Zero function. Pulse to V- larger than one second to enable RS232 output. When RS232 output is enabled, the APO will be disabled automatically.
107	BKLIT	I	Back light function. Pulse low to set BKOUT pin output.
108	KEY	I	Pulse to V- to change mode.
109	HOLD	I	Pulse to V- to enable HOLD function. Pulse to V- larger than one second to enable Delayed Hold function.
110	RANGE	I	Pulse to V- to enable manual mode and manual range selection.
111	FC5	I	Switch 5 for function selection.
112	FC4	I	Switch 4 for function selection.
113	FC3	I	Switch 3 for function selection.
114	FC2	I	Switch 2 for function selection.
115	FC1	I	Switch 1 for function selection.
116	SLACDC	I	Select initial DC/AC state.
117	CN	O	Negative capacitor connection for on-chip DC-DC converter.
118	CP	O	Positive capacitor connection for on-chip DC-DC converter.
119	LBAT9	I	Multi-level low battery configuration input. Simple external resistor divider is required.
120	V-	P	Negative supply voltage.
121	V-	P	Negative supply voltage.
122	V+	O	Output of on-chip DC-DC converter.
123	V+	O	Output of on-chip DC-DC converter.
124	DGND	P / G	Digital ground.
125	AGND	P / G	Analog ground.
126	AGND	P / G	Analog ground.
127	PEAKH	I / O	Maximum peak hold output. Connected to a polyester capacitor
128	PEAKL	I / O	Minimum peak hold output. Connected to a polyester capacitor

Note: Pin91-Pin96 are 4-level logic definition: (V+/DGND/Floating/V-), see **section Operation mode**

Absolute Maximum Ratings

Characteristic	Rating
Supply Voltage (V- to AGND)	-4V
Analog Input Voltage	V- -0.6 to V+ +0.6
V+	V+ ≥ (AGND/DGND+0.5V)
AGND/DGND	AGND/DGND ≥ (V- -0.5V)
Digital Input	V- -0.6 to DGND +0.6
Power Dissipation. Flat Package	500mW
Operating Temperature	-20℃ to 70℃
Storage Temperature	-45℃ to 125℃

Electrical Characteristics

Parameter	Symbol	Test Condition	Min.	Typ.	Max	Units
Power supply	V-		2.4	-3.0	3.3	V
Operating supply current In DCV mode	I_{DD}	Normal operation	—	1.8	2.5	mA
	I_{SS}	In sleep mode	—	5	10	µA
Voltage roll-over error	REV	10MΩ input resistor	—	—	±0.1	%F.S[1]
Voltage nonlinearity	NLV	Best case straight line CIL=MPR capacitor	—	—	±0.1	%F.S[1]
Zero input reading		10MΩ input resistor	-000	000	+000	counts
Band-gap reference voltage	V_{REF}	100KΩ resistor between VRH and AGND	-1.30	-1.23	-1.16	V
Open circuit voltage for 600Ω measurement		V-=3V	—	-3.0	—	V
Open circuit voltage for other Ω measurement			-1.19	-1.08	-0.97	V
Peak to peak backplane voltage		-3.5V≤ V ≤-2.2V	3.0	3.1	3.2	V
Internal pull-high to 0V current		Between V- pin and HOLD, RANGE, KEY, FC1-FC5, BKLIT,	—	1.2	—	µA
		Between V- pin and RS232	—	11	—	µA
AC frequency response at 6.000V range		±1%	—	40-400	—	HZ
		±5% (No compensated)	—	400-2000	—	
3dB frequency for LPF mode		F_{3dB} = 1kHz	—	1k	—	kHz
		F_{3dB} = Full	100k	—	—	kHz
Multi-level low battery detector	V_{t1}	LBAT9 vs. V-	—	2.15	—	V
	V_{t2}		—	1.82	—	
Reference voltage temperature coefficient	TC_{RF}	-20℃<T_A<70℃	—	100	—	ppm/℃
Minimum pulse width for Peak Hold feature	T_{PW}	4MHz crystal oscillator	1	—	—	ms
Capacitance measurement accuracy		6.0nF – 60mF	-2.5[2]	—	2.5[2]	%
			-3	—	3	counts

Note:

1. Full Scale.
2. When capacitance measurement (Clamp mode) is selected, the additional error 1% should be increased.

Function Description

1. Operating Modes

1.1. Semi-auto calibration scheme

ES238 includes DMM & Clamp-on meter features in single chip. DMM manufacturers need the calibration process in production. The traditional solution needs the variable resistors for calibration by manual adjustment. ES238 provide another calibration scheme and the most variable resistors could be ignored. When ES238 is at OFF-state, pull *CALENP* (pin 51) to V- to active the calibration scheme after re-power on. A digital controlled voltage output will be active from DACO. When semi-auto calibration scheme is active, use **HOLD** (or **BKLIT**) key to decrease voltage and use **RANGE (**or **MMX)** key to increase the voltage. Decrease the reference voltage means the counts on display will be increased. Increase the reference voltage means the counts on display will be decreased. The adjustment step is approximate one count. If coarse adjustment is required, push **HOLD** (or **BKLIT**) and **RANGE (**or **MMX)** larger than one second to speed up to approximate 10 counts per second. After calibration process is finished, push **HOLD** (or **BKLIT**) and **RANGE (**or **MMX)** less 1 sec. simultaneously to save the digital control code to external EEPROM (24C02).



The semi-auto calibration scheme supports the following nine measurement modes. When CALENP pin is active, set the proper function switches or push KEY to choose the target measurement mode. When mode is selected, the LCD segment of Unit at related measurement will be blinking.

Mode	Default Range For CAL	Remark
Voltage Measurement	6.000V (DC/AC separated)	Accuracy of other ranges is guaranteed by external resistor.
mV Voltage Measurement	600.0mV (DC/AC separated)	
DC Current Measurement For Multimeter (uA/mA)	600.0 μA or 6000 μA (2 modes choose one for calibration)	Auto 2 ranges choose one, proposed to use a large range to calibration.
AC Current Measurement For Multimeter (uA/mA)	600.0 μA or 6000 μA (2 modes choose one for calibration)	Auto 2 ranges separated for calibration is necessary.
DC Current Measurement For Multimeter (A)	6A or 20A	Auto 2 ranges choose one, proposed to use a large range to calibration.
AC Current Measurement For Multimeter (A)	6A or 20A	Auto 2 ranges individual for calibration is necessary.
DC Current Measurement For Clampmeter	600.0A or 6000A (6 modes choose one for calibration)	Auto 2 ranges choose one, proposed to use a large range to calibration.
AC Current Measurement For Clampmeter	600.0A or 6000A (6 modes choose one for calibration)	Auto 2 ranges separated for calibration is necessary.
Capacitor Measurement	60.00nF	
Temperature Measurement	600.0℃	Lower range in auto temperature measurement.
ADP Measurement	6000 / 600.0 / 60.00 / 6.000	4 ranges separated for calibration.

After calibration procedure is finished, set ES238 to OFF-state and set *CALENP* (pin51) to DGND or kept floating to return to normal mode operation after re-power on.

1.2. Voltage Measurement

A re-configurable voltage divider automatically provides a suitable range in voltage measurement mode. 600.0mV range is independent and manual mode. It takes input signal from *mVin* pin. The following table summarizes the Full-Scale ranges in each configuration.

Configuration	Full Scale Range	Divider Ratio	Resister Connection	Input Pin
VR1	600.0mV	1	-	*mVin V.S. SGND*
VR2	6.000V	1/10	VR2 (1.111MΩ)	*VR1 V.S. SGND*
VR3	60.00V	1/100	VR3 (101KΩ)	*VR1 V.S. SGND*
VR4	600.0V	1/1000	VR4 (10KΩ)	*VR1 V.S. SGND*
VR5	1000V	1/10000	VR5 (1KΩ)	*VR1 V.S. SGND*

The VST pin is used to control the voltage start range from 6.000V or 600.0V, refer to the table.

	VST			
	V+	**DGND**	**Floating**	**V-**
Initial state	600.0V	6.000V	600.0V	6.000V

The ES238 provide two types of the hazardous live voltage warning by different condition.

	SEL2			
	V+	**DGND**	**Floating**	**V-**
DCV	35V		70V	
ACV	16V		33V	
PEAK	22.6V		46.7V	

When the voltage measured exceeds the level defined, the buzzer generates 2KHz beep and *ALARM* (pin 57) drive high output (V+ level) periodically. It can remind the user to notice the hazardous voltage. The buzzer sound warning could be cancelled by *DIS* (pin94).

	DIS			
	V+	**DGND**	**Floating**	**V-**
Buzzer	Disable		Enable	

1.2.1. OL Selection

ES238 has a voltage OL selection feature archived by configuring the pin *CESEL*. In automatic voltage mode, ES238 will show OL when the voltage is exceed the overflow level. If *CESEL* is connected to V+, ES238 will have a 1010V overflow level in voltage mode. If *CESEL* connected to DGND, the overflow level will be set to 610V in DCV and ACV mode. The configuration of CESEL is listed below.

For ACV/DCV voltage modes:

	CESEL	
	V+	**DGND**
OL level	1010V	610V

Note: V-/Floating is not available.

1.3. Low Pass Filter (LPF) Mode For ACA/ACV Mode

ES238 provides a 3rd order low-pass filter to reduce the influence of high frequency noise. This LPF feature is available in ACV or ACA modes. Set *FC5* to low in these modes, the **KEY** button is used to activate the LPF feature. Press **KEY** button for less than 1 second to select the 3dB bandwidth of LPF sequentially (Full / 1kHz) and the relative LCD symbol on LCD panel will be active also. When peak-hold mode is active, the LPF mode will be disabled temporarily.

The *DIS* (pin94) could enable/disable the Low Pass Filter feature available.

	DIS			
	V+	**DGND**	**Floating**	**V-**
LPF	Disable	Enable	Disable	Enable

1.4. Current Measurement For Multi-meter

ES238 has 3 automatic current measurement modes for multimeter. The following table summarizes the Full-Scale range of each mode. When ES238 operates in the current measurement modes for multi-meter, it takes high input from pin *IVS*, low input from pin *SGND* and reference voltage from calibration scheme.

Mode	FC1~4	[1]VBAR	Full Scale	Input Terminal
Automatic1	1,1,0,1	1	600.0µA / 6000µA	*IVS V.S. SGND*
Automatic2	1,1,1,1	1	60.00mA / 600.0mA	*IVS V.S. SGND*
Automatic3	0,0,0,0	1	6.000A /10.00A[2]	*IVS V.S. SGND*

Note:

1. Connect *VBAR* to V- will disable the "μ_2" / "m_2" symbol on LCD panel.
2. Connect *SEL1* to V+(or Floated) or V- (or DGND) will set maximum readings of input for Automatic3 mode.

	SEL1			
	V+	**DGND**	**Floating**	**V-**
OL level	10.00A	20.00A	10.00A	20.00A

1.5. Current Measurement For Clamp-meter

ES238 has 2 automatic and 4 manual current measurement modes for Clampmeter. The following table summarizes the Full-Scale range of each mode. When ES238 operate in the automatic modes and the manual mode1~4, it takes high input from *CLAMPin* pin, low input from SGND and reference voltage from *VR_CLAMP*.

Mode	FC1~4	[1]VBAR	Full Scale	Input Terminal
Automatic1	1,1,0,1	0	600.0A / 6000A[2]	*CLAMPin V.S. SGND*
Automatic2	1,1,1,1	0	60.00A / 600.0A	*CLAMPin V.S. SGND*
Manual1	1,1,0,0	X	6.000A	*CLAMPin V.S. SGND*
Manual2	1,0,0,0	X	60.00A	*CLAMPin V.S. SGND*
Manual3	1,0,1,0	X	600.0A	*CLAMPin V.S. SGND*
Manual4	1,0,0,1	X	1000A or 2000A[2]	*CLAMPin V.S. SGND*

Note:

1. Connect *VBAR* to V- will disable the "μ_2" / "m_2" symbol on LCD panel.
2. Connect *SEL1* to DGND or V- will set maximum of input for Automatic1 & Manual4 modes.
3. In DC current modes for clamp-meter, ES238 provides **Zero Function** for offset removing.

	SEL1			
	V+	**DGND**	**Floating**	**V-**
OL level	1000A		2000A	

1.6. SCAN RSDC measurement

ES238 provide the smart auto check mode for the DUT type. It could scan the four types of device **R**esistor / **S**horted / **D**iode / **C**apacitor. Push KEY to change to individual function is available. It could increase the measurement ranges.

The following table summarizes the detective range for the smart scan RSDC mode.

Mode	FC1~4	SLACDC	Available scanning range
Scan RSDC	1,1,1,0	0	R: ~ 6MΩ (Parasitic capacitance < 100pF) S: < 30Ω buzzer ON D: forward/reverse diode direction C: ~ 600uF (Minimum 500pF)

1.7. Resistance Measurement

A re-configurable divider automatically provides a suitable Full-Scale range in resistance measurement mode.

The following table summarizes the full-scale ranges and the reference resistors in each configuration.

Configuration	Full Scale Range	Relative Resistor	Equivalent value
OR0	60.00Ω	OR1	100Ω
OR1	600.0Ω	OR1	100Ω
OR2	6.000KΩ	VR5	1KΩ
OR3	60.00KΩ	VR4 || VR1	10KΩ
OR4	600.0KΩ	VR3 || VR1	100KΩ
OR5	6.000MΩ	VR2 || VR1	1MΩ
OR6	60.00MΩ	VR1	10MΩ

1.8. Capacitance Measurement

The following table summarizes the eight ranges of capacitance measurement mode.

Configuration[1]	Full Scale Range	Relative Resistor	Measurement Period
C1[3]	6.000nF	Ratio to C2	0.36 sec
C2[2]	60.00nF	CAL	0.36 sec
C3	600.0nF	Ratio to C2	1.15 sec
C4	6.000uF	Ratio to C2	1.15 sec
C5	60.00uF	R10K	0.33 sec
C6	600.0uF	R10K	3.3 sec(max)
C7	6.000mF	R1K	1.32 sec(max)
C8	60.00mF	R1K	13.2 sec(max)

Note:

1. In order to obtain an accurate reading, a capacitor must be discharged before measurement begins. The chip has a built-in discharge mode to automatically discharge the capacitor. In discharge mode, the main-display shows **dIS.C**. Discharging through the chip is quite slow. We recommend users to discharge the capacitor with some other apparatus.
2. The C2 range is calibrated in calibration scheme.
3. The C1 range residual offset could be compensated by the small capacitors near to OVH pin.

1.9. Continuity Check

Continuity check shares the same configuration with 600.0Ω manual resistance measurement mode and has buzzer output to indicate continuity. The buzzer generates 2KHz beep and *ALARM1* (pin 56) drive high output (V+ level) whenever the reading is less than 30Ω. The ES238 built in a high speed short detection circuit and the detection could be less than 10ms.

1.10. Diode Measurement

Diode measurement mode shares the same configuration with 6.000V manual voltage measurement mode and has buzzer output to indicate continuity. The buzzer generates a 2KHz sound and *ALARM1* (pin 56) drive high output (V+ level) whenever the reading is less than 30mV. If the test circuit is open or the voltage drop between the two ports of the diode under test is larger than 2V or 2.5V (depends on *SEL2* pin level), the LCD panel will show "OL".

	SEL2			
	V+	**DGND**	**Floating**	**V-**
OL	2.500V	2.000V	2.500V	2.000V

The ES238 also support a LED forward voltage measurement mode. It is necessary to use external source to achieve the measurement. The following table & diagram summarizes the diode & LED measurement mode.

Mode	**SLACDC**	**FC1~4**	**SEL2**	**Full Scale**	**Input Terminal**
LED	1	0,0,1,0	V+ or FLOAT	3.500V	*VR1 V.S. SGND*

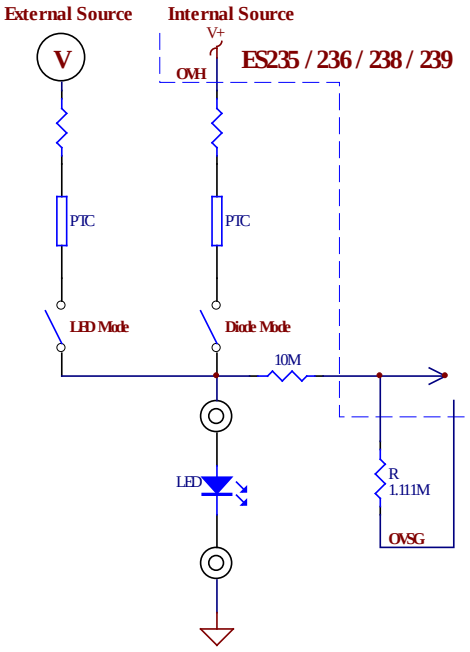

1.11. Frequency Counter

The time base of the frequency counter is derived from an external crystal oscillator by

$$T_{counter} = \frac{4{,}000{,}000}{F_{osc}}$$

Where F_{osc} is the frequency of the crystal oscillator. Thus, the counter has a 1-second time base when a 4MHz oscillator is used. The frequency counter can select the proper range automatically or manually. Auto-range operation extends over six decades, from 600.0Hz to 60.00MHz. The following table summarizes the Full-Scale range of the frequency counter.

Range	Full Scale
FR1	600.0Hz
FR2	6.000KHz
FR3	60.00KHz
FR4	600.0KHz
FR5	6.000MHz
FR6	60.00MHz

*If input frequency is less than 1.0Hz, ES238 will show **0.0Hz**

1.12. Duty Cycle Measurement

When frequency mode is selected, push **HZ** key to enter duty cycle measurement. The duty cycle mode range is within 5.0% to 95.0% (< 10kHz@3Vpp). The minimum resolution is 0.1%. If the source frequency duty cycle is smaller than 5.0%, the UL will be shown on the LCD display. If the duty cycle is larger than 95.0%, the OL will be shown on the LCD. When the frequency is zero, the duty cycle display will be 0.0% or “UL” shown.

1.13. Electrical field detection mode

ES238 supports a non-contact AC voltage measurement, which is called electric field measurement also. The ADC input is configured from *ADP* pin vs. *SGND*. When no or less electric field is detected, the LCD display shows "EF". If the electric field is detected, the strength will be showed on the LCD display by "-" not digits type. Level 1(equivalent to 12.5% full scale of ADC) is "-" and the level 4(equivalent to 100% full scale of ADC) is "----". Additional beeper (*BUZOUT* pin) and LED alarm (*ALARM* pin) will be output from ES238. The frequency of buzzer and LED alarm depends on the strength of electric field also. The Faster beeper means the stronger electric field (AC voltage) is sensed.

Mode	FC1~4	SLACDC	Full Scale	Input Terminal
EF	1,1,1,0	1	-	*ADP V.S. SGND*

EF test circuit

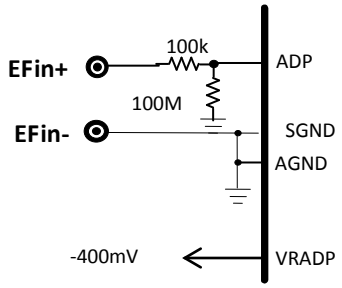

1.14. Temperature Measurement mode

Temperature measurement mode takes input signal from *TEMPin* pin. The ES238 has ºC to ºF scale translation circuit and standard K-type thermocouple reference table is built-in. External cold-junction compensation circuit is still necessary. In temperature measurement mode, there is automatic mode and manual mode. The *TSEL* pin (pin95) is used to control the automatic mode ($0.1^{O}C/1^{O}C$ resolution) or manual mode ($0.1^{O}C$ resolution) selection. It also could enable or disable display of input terminal symbol on the LCD panel (SEG28).

	Manual range	Auto Range
ºC range	-200.0 ºC ~ 600.0 ºC	-200.0 ºC ~ 600.0 ºC / -200 ºC ~ 1350 ºC
ºF range	-328.0 ºF ~ 999.9 ºF	-328.0 ºF ~ 999.9 ºF / -328 ºF ~ 2462 ºF

The following table summarizes the operation of *TSEL* pin:

	TSEL			
	V+	**DGND**	**Floating**	**V-**
Range select	Manual range	Auto range	Manual range	Auto range
LCD SEG28	Display Symbol ON	Display Symbol ON	Display Symbol OFF	Display Symbol OFF

Temperature mode circuit example:

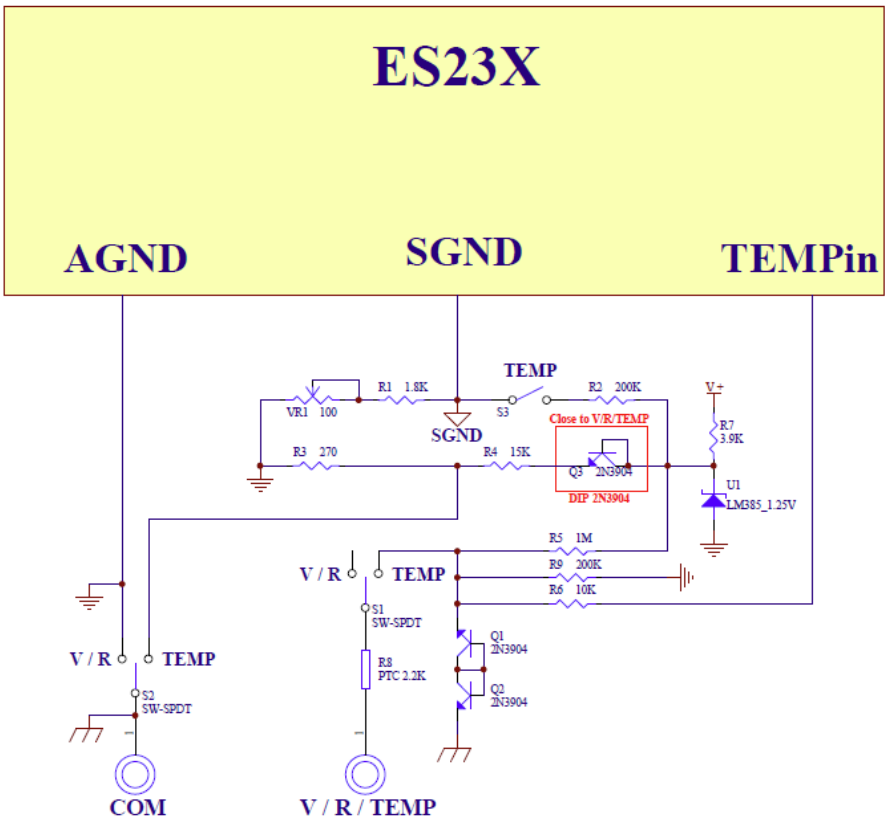

1.15. ADP

ES238 provides 4 manual range ADP measurement modes for user define. The *ADP* pin is auxiliary input terminal for ADC of ES238. The full scale for ADP mode is 600.0mV. If FC5=0, the minus sign will not be shown on LCD segment.

Mode	FC1~4	SLACDC	Full Scale	Input Terminal
ADP0	0,0,1,1	1	6000	*ADP V.S. SGND*
ADP1	0,0,0,1	1	600.0	*ADP V.S. SGND*
ADP2	0,1,1,1	1	60.00	*ADP V.S. SGND*
ADP3	0,0,1,0[1]	1	6.000	*ADP V.S. SGND*

Note:

1. **If SEL2 pin is set to V+ or kept floating, the ADP3 mode will be disabled and change to LED mode.**

The *VST* pin (pin96) could be used to enable or disable input terminal symbol displayed on LCD panel for ADP mode.

	VST			
	V+	**DGND**	**Floating**	**V-**
LCD SEG28	Display Symbol ON		Display Symbol OFF	

1.16. Auto Power Off And Idle Time Selection

ES238 has a default auto power off function. If the meter is idle for more than the given idle time duration, the chip automatically turns the power off. The idle time to trigger the auto power off function is determined by *APOSEL* pin. If *APOSEL* is connected to V-, the idle time will be set to 30 minutes. If pin *APOSEL* is floating, the Idle Time will be set to 15 minutes. When APO is occurred, the state of the meter is reserved. The APO symbol on the LCD panel indicates whether the auto power off is enabled or not. In some cases, user might want to disable Auto power off. There are two ways to disable this feature as following:

1. Power on the meter when any of the push functions, except for **HOLD,** is pressed down.
2. In addition, when RS232 output is active, the auto power off function is also disabled automatically.

Note: Powering on the meter while pressing HOLD and lasts 2 seconds turns on all LCD segments until HOLD is pressed again.

1.17. Sleep

The meter enters sleep mode after auto power off. The *SLEEP* pin asserts low (V-) in the sleep mode, and asserts high (V+, not 0V) after re-power on.

1.18. Re-Power On

After auto power-off, pushing any of the push function or changing the rotary mode can turn on the meter again. If the meter is re-powered on by changing the rotary mode, the saved state is cleared. If the meter is re-powered on by push functions, the chip restores the saved state and enters HOLD mode. The LCD displays the saved value.

1.19. Hazardous Voltage Indication

The ES238 could provide the AC/DC hazardous voltage indication for voltage/resistor/capacitor/diode modes. Of course, the indication could support LCD symbol /LED /Buzzer driving simultaneously. Especially ES238 could detect the AC voltage in DCV mode and detects the DC voltage in ACV mode. It means if not proper AC or DC voltage signal exists on the DUT when DCV or ACV measurement mode is set, the HV indication will be active.

HV indication criterion

Function / Range	DC voltage (typ.)	AC voltage (typ.)
AC mV	> ±3V	OL
AC 6V	> ±20V	OL
AC 60V – 1000V	> ±100V	Depends on *SEL2*
DC mV	OL	> 3Vrms (40-1kHz)
DC 6V	OL	> 20Vrms (40-1kHz)
DC 60V-1000V	Depends on *SEL2*	> 90Vrms (40-1kHz)
Res/Cap/Diode modes	> ±10V	> 10Vrms (40-1kHz)

Note: If AC+DC signal is applied, the voltage criterion will be changed.

.

1.20. Multi-level Low Battery Voltage Detection

ES238 provides a voltage detection input (pin 121: *LBAT9*) for multi-level low battery application. There are two internal voltage reference Vt1 & Vt2 for comparing with *LBAT9*. If *LBAT9* is larger than Vt1, the LCD segment of SLB1 – SLB3 will active always. This status implies Full battery. When *LBAT9* is less than Vt1 but larger than Vt2, the LCD segment of SLB1 will disappear and this status implies Half battery. When LBAT9 is less than Vt2, the LCD segment of SLB2 will disappear and this status implies Low battery. When the Low battery status lasts for 10 seconds, the LCD segment of SLB3 will be blinking. When the SLB3 is blinking for 20 seconds, the operation of meter will be inhibited and LCD panel will show " Lo.bt". In this case, it is suggested to replace a new battery immediately. After "Lo.bt" appears and lasts for 60 seconds, ES238 will enter to auto power off mode.

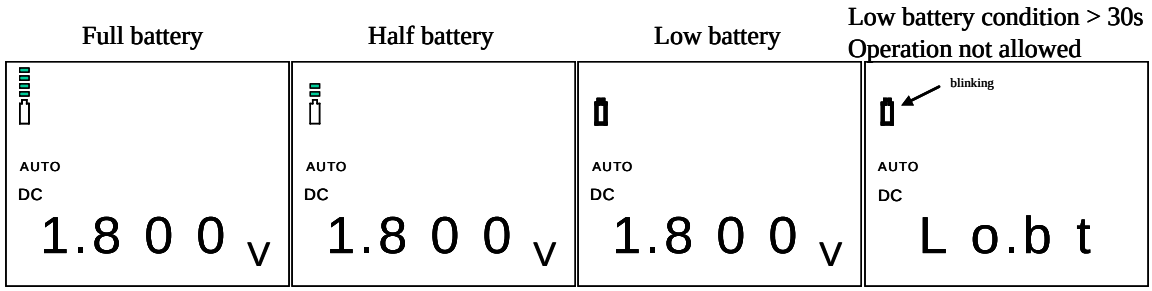

Low battery test circuit (a)

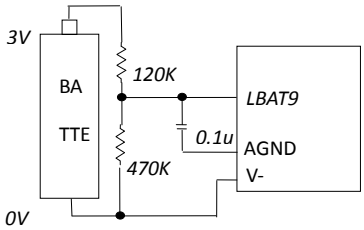

Low battery test circuit (b)

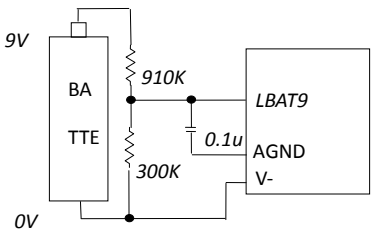

2. Measurement Mode Switching

Measurement mode depends on the logic level of *SLACDC, FC1, FC2, FC3, FC4, FC5* and **KEY** selection. When *FC5* is high, the measurement mode list is shown below:

SLACDC	*FC1*	*FC2*	*FC3*	*FC4*	Mode	**KEY** selection
0	1	0	1	1	DC Voltage Measurement	DCV ↔ ACV
0	1	1	0	1	[23]Auto DC Current Measurement(μA)	DCA ↔ ACA
0	1	1	1	1	[23]Auto DC Current Measurement(mA)	DCA ↔ ACA
0	0	0	0	0	[23]Auto DC Current Measurement(A)	DCA ↔ ACA
0	1	1	1	0	Scan RSDC	Ω → Continuity → Diode → Cap → Scan
0	1	1	0	0	[3]Manual DC 6.000A	DCA ↔ ACA
0	1	0	0	0	[3]Manual DC 60.00A	DCA ↔ ACA
0	1	0	1	0	[3]Manual DC 600.0A	DCA ↔ ACA
0	1	0	0	1	[3]Manual DC 6000A	DCA ↔ ACA
0	0	0	1	1	Resistance Measurement	Ω ↔ Continuity
0	0	0	0	1	Continuity Check	Continuity ↔ Diode
0	0	1	1	1	Resistance Measurement	Ω→ Continuity → Diode
0	0	0	1	0	Frequency Measurement	----
0	0	1	1	0	Capacitance Measurement	----
0	0	1	0	0	Auto Temperature Measurement	℃ ↔ ℉
0	0	1	0	1	DCmV	DCmV ↔ ACmV
1	1	0	1	1	AC Voltage Measurement	ACV ↔ DCV
1	1	1	0	1	[23]Auto AC Current Measurement(μA)	ACA ↔ DCA
1	1	1	1	1	[23]Auto AC Current Measurement(mA)	ACA ↔ DCA
1	0	0	0	0	[23]Auto AC Current Measurement(A)	ACA ↔ DCA
1	1	1	1	0	EF mode	----
1	1	1	0	0	[3]Manual AC 6.000A	ACA ↔ DCA
1	1	0	0	0	[3]Manual AC 60.00A	ACA ↔ DCA
1	1	0	1	0	[3]Manual AC 600.0A	ACA ↔ DCA
1	1	0	0	1	[3]Manual AC 6000A	ACA ↔ DCA
1	0	0	1	1	[1]ADP0 (6000)	----
1	0	0	0	1	[1]ADP1 (600.0)	----
1	0	1	1	1	[1]ADP2 (60.00)	----
1	0	0	1	0	[1]ADP3 (6.000)	Set to LED mode if *SEL2* is kept float
1	0	1	1	0	Capacitance Measurement (Clamp)	----
1	0	1	0	0	Auto Temperature Measurement	℉↔℃
1	0	1	0	1	ACmV	ACmV ↔ DCmV

Note:

1. When FC5 is high, the ADP0, ADP1, ADP2 and ADP3 modes can display minus sign.
2. These modes could be designed for multimeter current modes, please refer to section 1.4.
3. These modes could be designed for clampmeter current modes, please refer to section 1.5.

Measurement Mode Switching (Continued)

Measurement mode depends on the logic level of *SLACDC*, *FC1*, *FC2*, *FC3*, *FC4*, *FC5* and **KEY** selection. When *FC5* is low, the KEY function is disabled in most modes. The measurement mode list is shown below:

SLACDC	*FC1*	*FC2*	*FC3*	*FC4*	Mode	**KEY** selection & Remaks
0	1	0	1	1	DC Voltage Measurement	----
0	1	1	0	1	[23]Auto DC Current Measurement(μA)	----
0	1	1	1	1	[23]Auto DC Current Measurement(mA)	----
0	0	0	0	0	[23]Auto DC Current Measurement(A)	----
0	1	1	1	0	Scan RSDC	Ω → Continuity → Diode → Cap → Scan
0	1	1	0	0	[3]Manual DC 6.000A	----
0	1	0	0	0	[3]Manual DC 60.00A	----
0	1	0	1	0	[3]Manual DC 600.0A	----
0	1	0	0	1	[3]Manual DC 6000A	----
0	0	0	1	1	Resistance Measurement	----
0	0	0	0	1	Continuity Check	----
0	0	1	1	1	Diode Measurement	----
0	0	0	1	0	Frequency Measurement	----
0	0	1	1	0	Capacitance Measurement	----
0	0	1	0	0	Auto Temperature Measurement	℃
0	0	1	0	1	DCmV	----
1	1	0	1	1	AC Voltage Measurement	LPF Full←→1K
1	1	1	0	1	[23]Auto AC Current Measurement(μA)	LPF Full←→1K
1	1	1	1	1	[23]Auto AC Current Measurement(mA)	LPF Full←→1K
1	0	0	0	0	[23]Auto AC Current Measurement(A)	LPF Full←→1K
1	1	1	1	0	EF mode	----
1	1	1	0	0	[3]Manual AC 6.000A	LPF Full←→1K
1	1	0	0	0	[3]Manual AC 60.00A	LPF Full←→1K
1	1	0	1	0	[3]Manual AC 600.0A	LPF Full←→1K
1	1	0	0	1	[3]Manual AC 6000A	LPF Full←→1K
1	0	0	1	1	[1]ADP0 (6000)	----
1	0	0	0	1	[1]ADP1 (600.0)	----
1	0	1	1	1	[1]ADP2 (60.00)	----
1	0	0	1	0	[1]ADP3 (6.000)	Set to LED mode if *SEL2* is kept float
1	0	1	1	0	Capacitance Measurement (Clamp)	----
1	0	1	0	0	Auto Temperature Measurement	℉
1	0	1	0	1	ACmV	LPF Full←→1K

Note:

1. When FC5 is low, the ADP0, ADP1, ADP2 and ADP3 modes can't display minus sign.
2. These modes could be designed for multi-meter current modes, please refer to section 1.4.
3. These modes could be designed for clamp-meter current modes, please refer to section 1.5.

3. Push Function

All the enabled push functions will be reset when the measurement mode is changed when *FC1-FC5* modes are changed. The following table lists the available function versus every measurement mode.

	PEAK	HZ	MMX	REL/RS232[5]	BKLIT	KEY	HOLD	RANGE
Voltage mode	O	AC	O	O	O	O	O	O
mV mode	O	AC	O	O	O	O	O	X
[1]Current Mode for Multimeter	O	AC	O	O	O	O	O	O
[2]Current Mode for Clampmeter	O	AC	O	O[3]	O	O	O	X
Resistance	X	X	O	O	O	O	O	O
Continuity	X	X	O	O	O	O	O	X
Diode mode	X	X	O	O	O	O	O	X
Frequency	X	O	X	O	O	X	O	O
Capacitance	X	X	O	O	O	X	O	O
Temperature	X	X	O	O	O	O	O	O[4]
Scan RSDC	X	X	X	O	O	O	O	X
EF Mode	X	X	X	O	O	X	X	X
ADP mode	X	X	O	O	O	X	O	X

Note:

[1]Include automatic μA, automatic mA and manual A modes, please refer to **section 1.4**.

[2]Include 2 automatic modes and 4 manual modes, please refer to **section 1.5**.

[3]When clamp-meter DCA mode is selected, the REL function will be changed to ZERO function operation automatically.

[4]Only auto range temperature mode is available.

[5]When RS232 (pin99) is pulled to V-, push REL key and lasts for 2 seconds will active the UART output.

3.1. Range

Push **RANGE**[1] key to switch from automatic to manual mode, and while in manual mode, changes the full-scale range. The following figure shows the state transition.

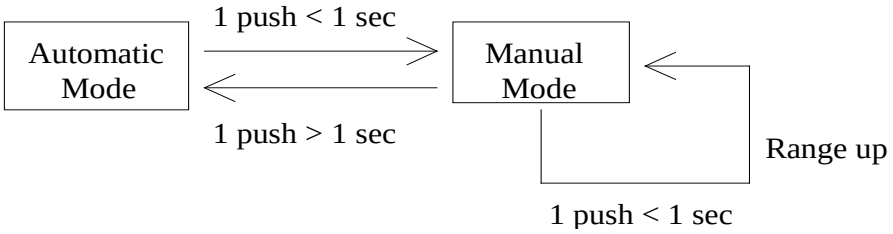

Measurement Mode	Auto	Manual	Control Range	Initial Range
V	VR2 – VR5	VRi → VRi + 1, VR5 → VR2	6.000V – 1000V	6.000V[2]
Auto µA	R1 – R2	R1 → R2, R2 → R1	600.0µA – 6000µA	600.0µA
Auto mA	R1－R2	R1 → R2 R2 → R1	60.00mA – 600.0mA	60.00mA
Auto A	R1－R2	R1 → R2 R2 → R1	6.000A – 10.00A	6.000A
Auto 60A/600A (clamp)	R1－R2	R1 → R2 R2 → R1	60.00A – 600.0A	60.00A
Auto 600A/6000A (clamp)	R1－R2	R1 → R2 R2 → R1	600.0A – 6000A	600.0A
Capacitance	C1 – C8	Ci → Ci + 1, C8 → C1	6.000nF– 60.00mF	6.000nF
Capacitance (Clamp)	C1 – C8	Ci → Ci + 1, C8 → C1	6.000nF– 60.00mF	6.000nF
Ω	OR0 – OR6	ORi → ORi + 1, OR6 → OR0	60.00Ω – 60.00MΩ	60.00Ω
Temp	T1-T2	T1→T2 T2→T1	600.0°C~1350°C	600.0°C
Frequency	FR1 – FR7	FRi → FRi + 1 FR7 → FR1	600.0Hz – 60.00MHz	600.0Hz

Note:

1. Pushing **RANGE** resets all existing special modes except for VAHZ mode.
2. Initial range of voltage mode depends on *VST* pin configuration

3.2. HOLD and Delayed Hold Feature

HOLD mode makes the meter stop updating the LCD panel. This mode can be nested in most of the special modes. Enabling HOLD function in automatic mode makes the meter switch to manual mode, but the Full-Scale range remains the same. ES238 provides a Delay HOLD feature. To activate Delay HOLD feature, press down the **HOLD** bottom and last for 2 seconds. The meter will delay for 6 seconds, than enters HOLD mode. In the 6-secnod delayed time, the HOLD symbol on LCD panel will blink. HOLD function and the delayed state can be cancelled by changing the measurement mode, pressing **RANGE**, or push **HOLD** again.

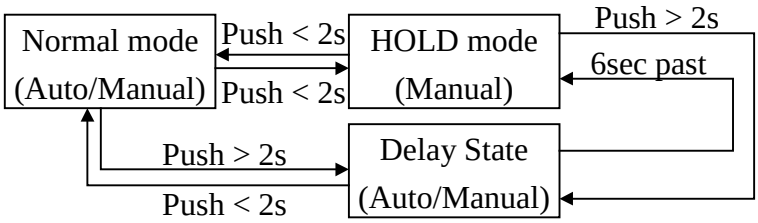

3.3. KEY

See Section “Measurement Mode Switching” for the function of this pin.

3.4. REL + HOLD

In REL mode, the LCD panel displays D_{N+K} - D_N, where N = 1, 2, 3, … , D_N is the last value before **REL** key is pushed, and D_{N+K} is the current value. The meter returns to normal operation if **REL** is pressed again. Pressing **HOLD** in REL mode makes the meter stop updating the LCD panel.

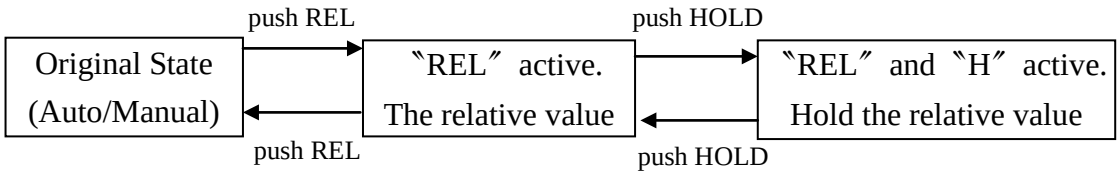

Note:

1. It’s possible that relative value (D_{N+K} - D_N) exceeds 6,000 or -6,000 counts. The LCD shows OL in REL mode only if D_N or D_{N+K} is more than 6,000 counts.

3.5. Max/Min + HOLD

The meter displays the maximum or minimum value of the input in Max/Min mode. When **MMX** key is pressed for the first time, the meter displays the maximum value. The meter displays the minimum value, when it is pressed again. When **MMX** key is pressed for the third time, the meter displays current value. The meter returns to normal operation if **MMX** is pressed and held for longer than one second. Pressing **HOLD** in Max/Min mode makes the meter stop updating the maximum or the minimum value.

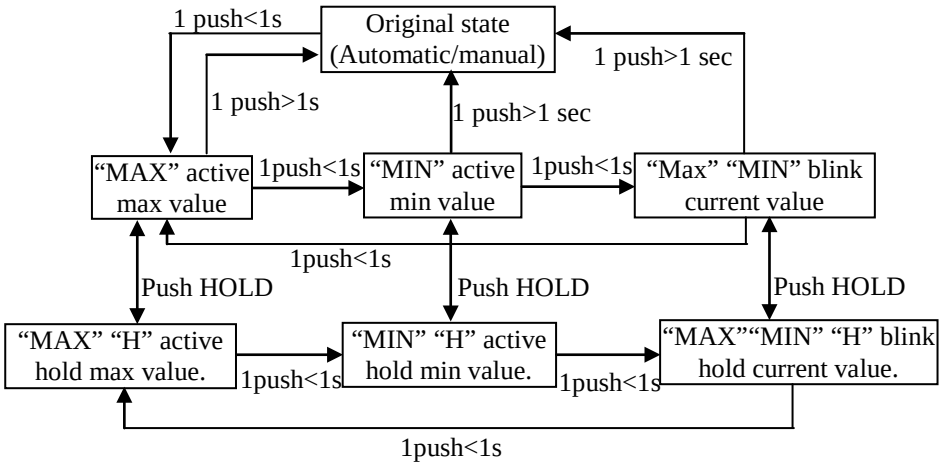

3.6. Relative + Max/Min + HOLD

Max/Min mode can be nested in REL mode. The meter displays the maximum or minimum value relative to the reference when **MMX** is pressed in REL mode. Pressing **HOLD** under REL + Max/Min makes the meter stop updating the LCD panel.

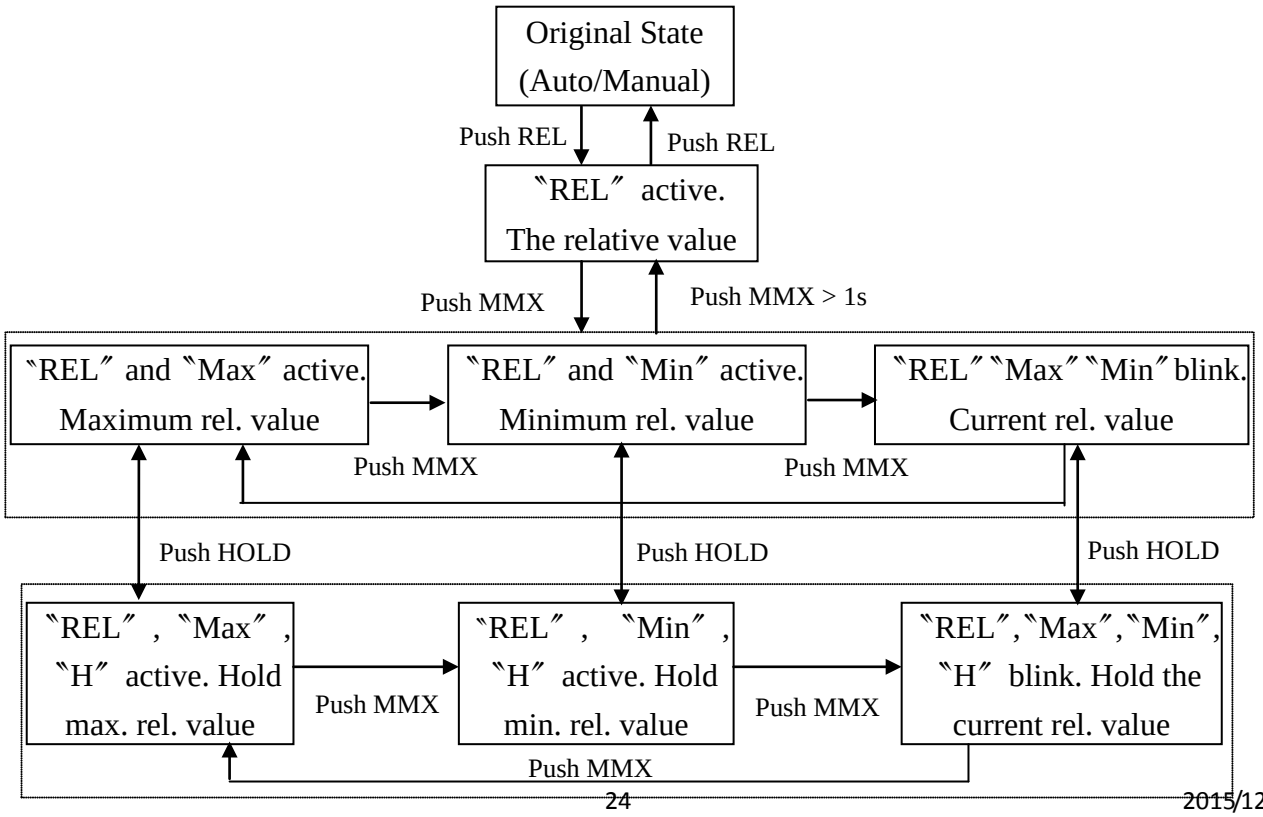

3.7. PEAK-HOLD Function

Peak mode takes input from Pmax or Pmin pin. The peak values are stored in external capacitors. Polyester Mylar capacitors are recommended. The precision of Peak mode measurement can be enhanced by calibration. Calibration for Peak mode is invoked by pressing **PEAK** key for more than 2 seconds. Entering Peak mode will automatically execute peak calibration, if peak calibration was never done before. The Calibration process measures and stores the offset voltage of internal operation amplifiers. High precision is achieved by subtracting this offset from reading. ES238 will automatically execute peak calibration, if peak mode is activated again.

The flow chart of PEAK function is shown below:

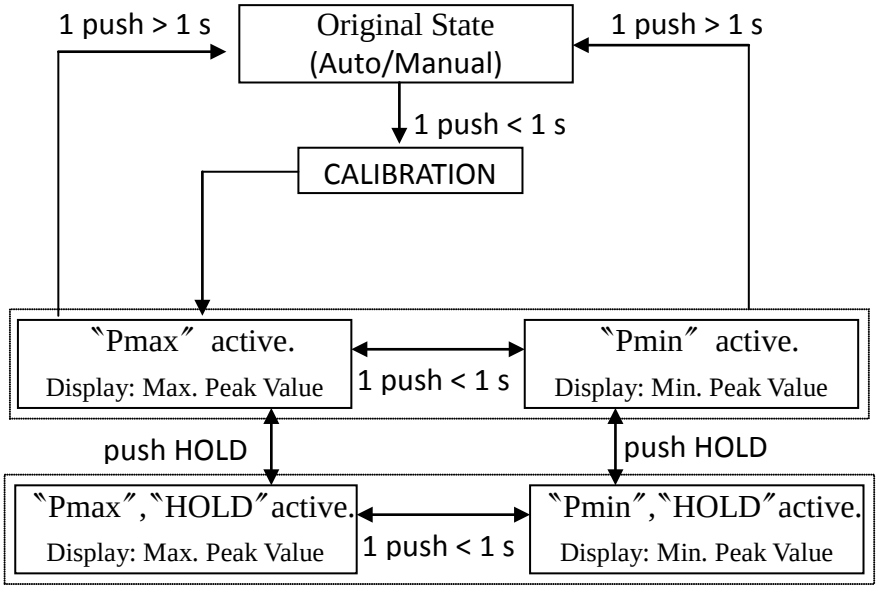

3.8. ZERO Function

In manual DC 6.000A, 60.00A, 600.0A and 6000A, auto DC 60.00A/600.0A, and auto DC 600.0A/6000A (please refer to **section 1.5**) mesurement modes, ES238 provides ZERO function to remove the residual current value. Push **REL** key less than one second to enter ZERO mode. In ZERO mode, the LCD panel displays D_{N+K} - D_N, where N = 1, 2, 3, … , D_N is the last conversion value before **REL** key is pushed, and D_{N+K} is the current conversion value. If **REL** key is pushed again in ZERO mode, the meter will refresh the D_N value and displays the D_{N+K} - D_N again. The meter returns to normal operation if **REL** key is pressed and held for longer than one second. Pressing **HOLD** in ZERO mode makes the meter stop updating the LCD panel. In 2-range auto DCA modes for clampmeter (600.0A/6000A or 60.00A/600.0A), the system will stay in automatic mode, even if the ZERO function is activated. In other words, It could achieve real automatic operation. In automatic mode, ZERO function could not be entered from higher range, but it could be still activated if current range is lower one. This is because most residual current value is so small that the range could not be higher one in automatic mode. When enter ZERO mode from lower range, the system will store the nonzero counts (residual current value). If the range goes up to higher one automatically, the nonzero counts will be divided by ten. So this function will still work well in automatic modes.

- **State diagram for ZEROmode :**

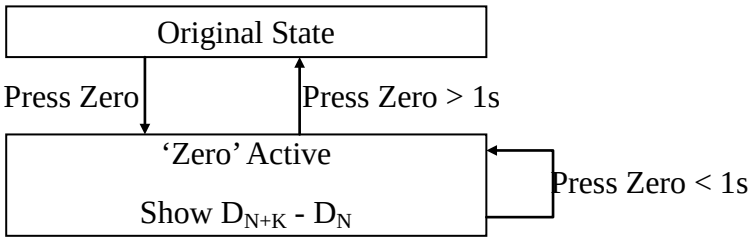

- **State diagram for ZERO + HOLD mode :**

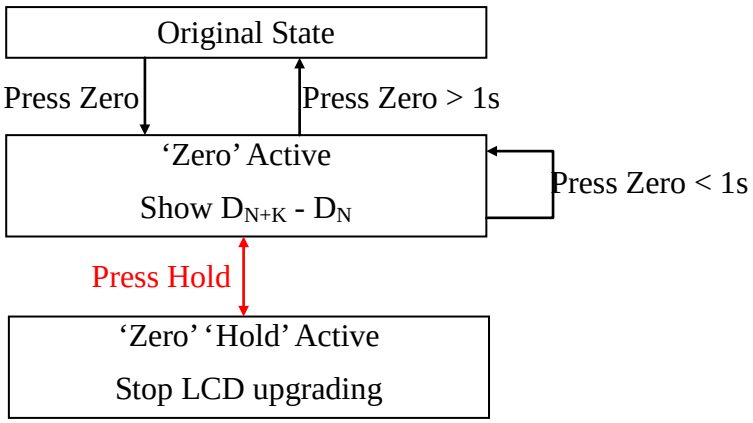

- **State diagram for ZERO + Max/Min + HOLD mode :**

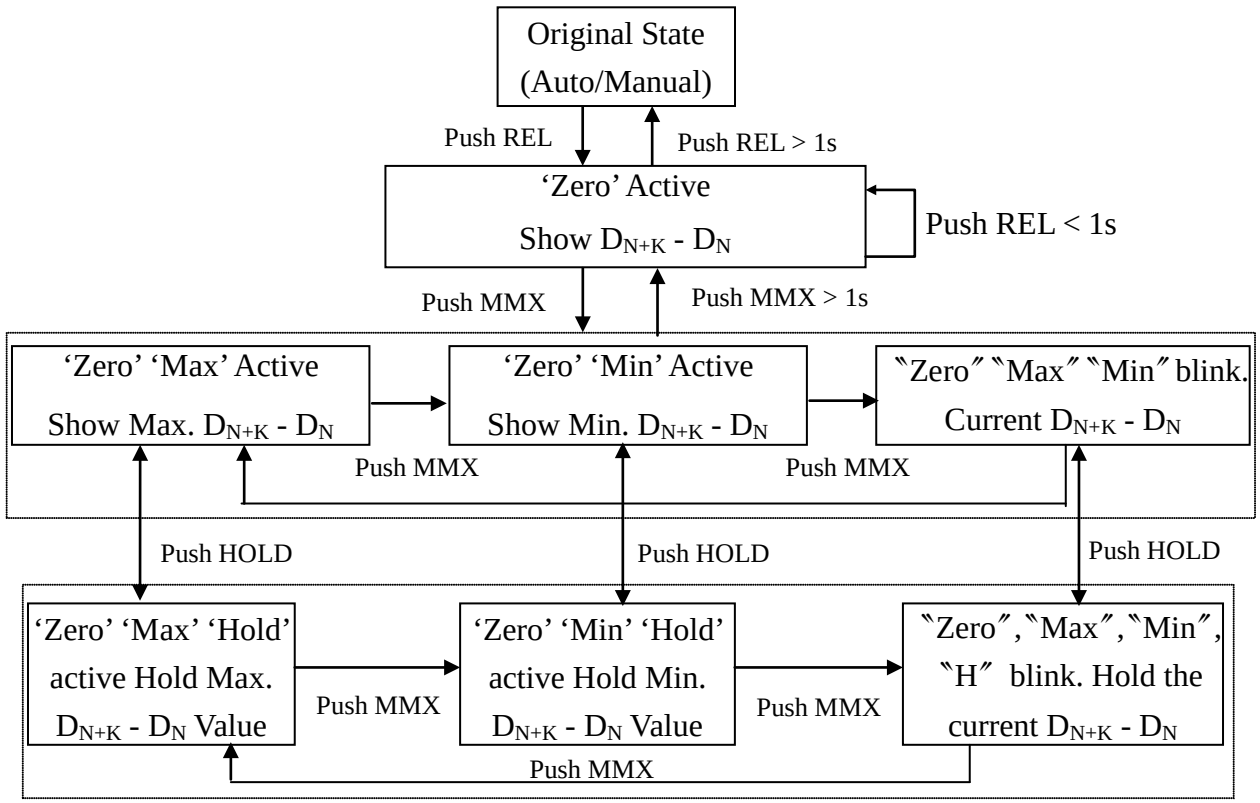

3.9. VAHZ Function

When voltage or current measurement mode is selected, the VAHz funtion is available. Push **HZ** key to select this frequency measurement mode. The frequency is measured by auto ranging. The maximum frequency range is 60KHz. The sensitivity of signal input is 5% full scale of signal in voltage or current mode typically.

Configuration	RANGE
FR1	600.0Hz
FR2	6.000KHz
FR3	60.00KHz

4. Serial Data Output

The RS232 function will be activated if press down the **REL** key and last for 2 seconds, RS232 symbol will be shown on the LCD display. The serial data sent to SDO pin periodically at every A/D conversion cycle by 15 times per second. The data format complies with 8Bits transmission code with a baud rate of 9600. The host can use RS232 interface to read the data. A single data packet includes a start bit (always 0), 8 data bits with no parity check bit, and a stop bit (always 1). The high and low voltage levels correspond to DGND and V- respectively. SDO remains at 1 (high) when it is inactive. Hence the start bit (0) could be used as the triggering signal to begin the reading process. The following figure shows the data format of a single packet.

Single packet

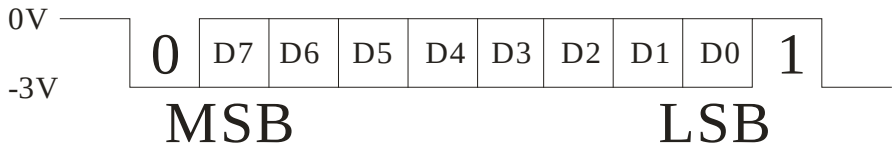

One data block consists of 17 packets. The following figure shows the format of a data block. The Header and Device code leads the whole packets. The range packet indicates the decimal point position on LCD panel of meter. Main_Digit1-3 consists of the readings on the LCD panel. The function packet indicates the measurement mode of the meter. Status1-4, Unit and Bargraph give the other status of the meter. CR and LF are delimiters used to separate the blocks.

All packets

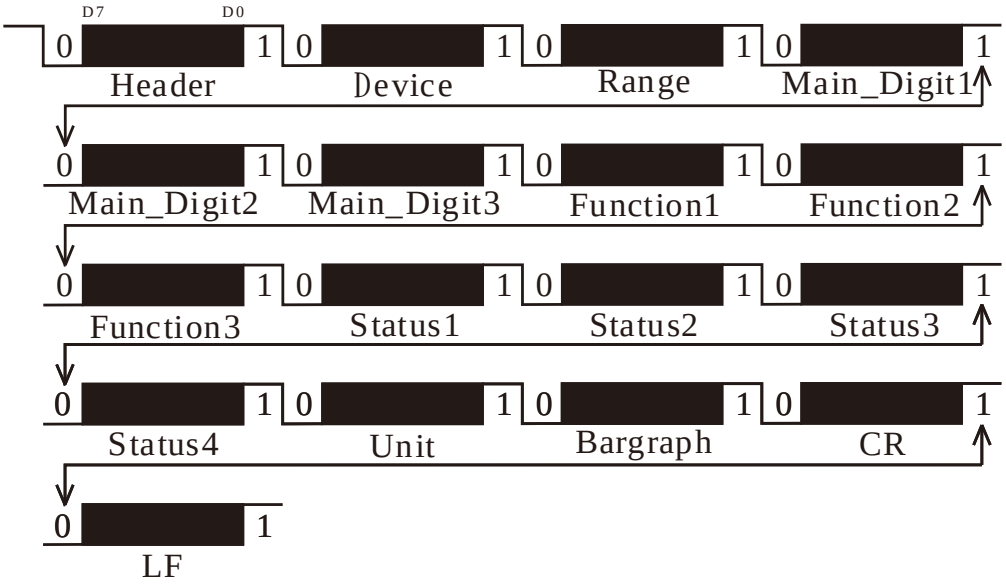

The meter always outputs the current value shown on LCD screen to the serial port. The detailed data format of each packet is listed below.

	D0	D1	D2	D3	D4	D5	D6	D7	
a01	0	0	0	0	1	1	1	1	Header
a02	1	0	0	0	0	0	0	1	Device
a03	X	X	X	X	M_DP1	M_DP2	M_DP3	X	Range
a04	M_SIGN	X	X	X	X	X	X	X	Main_Digit1
a05	$Digit3_3$	$Digit3_2$	$Digit3_1$	$Digit3_0$	$Digit2_3$	$Digit2_2$	$Digit2_1$	$Digit2_0$	Main_Digit2
a06	$Digit1_3$	$Digit1_2$	$Digit1_1$	$Digit1_0$	$Digit0_3$	$Digit0_2$	$Digit0_1$	$Digit0_0$	Main_Digit3
a07	V	A	Ohm	Continuity	Diode	Capacitance	Hz	Duty	Function1
a08	VAHZ	℃	℉	X	EFmode	SCAN	Clamp	LED	Function2
a09	ADP0	ADP1	ADP2	ADP3	X	X	X	X	Function3
a10	AUTO	MANU	AC	DC	OL	UL	X	X	Status1
a11	SLB3	SLB2	SLB1	LBAT30s	BW_full	X	BW1K	HOLD	Status2
a12	REL	ZERO	MAX	MIN	CURRENT	PHCAL	PMAX	PMIN	Status3
a13	Danger	OPEN	SHORT	DISCH	X	X	X	X	Status4
a14	Mega	Kilo	X	Mili	X	Micro	X	Nano	Unit
a15	B_SIGN	X	B<06>	B<05>	B<04>	B<03>	B<02>	B<01>	Bargraph
a16	0	0	0	0	1	1	0	1	CR
a17	0	0	0	0	1	0	1	0	LF

Note：

1. X → undefind.
2. Whole packet is shown by LSB first.

4.1. RANGE

This packet indicates range state of the meter. The M_DP1 – M_DP3 corresponding DP1 – DP3 of LCD segment (see **section 5**). In DCV 6.000V range, this **a03** packet will set **xxxx001x**. If change to 60.00V the packet will be **xxxx010x**.

	D0	D1	D2	D3	D4	D5	D6	D7
a03	X	X	X	X	M_DP1	M_DP2	M_DP3	X

4.2. Main_Digit1 –Main_Digit3

Main_Digit1 – Main_Digit3 is the readings of measurement result shown on LCD panel. $DigitN_3$ – $DigitN_0$ consist of 4-bit BCD code. The M_SIGN is the sign bit of readings.

	D0	D1	D2	D3	D4	D5	D6	D7
a04	M_SIGN	X	X	X	X	X	X	X
a05	$Digit3_3$	$Digit3_2$	$Digit3_1$	$Digit3_0$	$Digit2_3$	$Digit2_2$	$Digit2_1$	$Digit2_0$
a06	$Digit1_3$	$Digit1_2$	$Digit1_1$	$Digit1_0$	$Digit0_3$	$Digit0_2$	$Digit0_1$	$Digit0_0$

4.3. FUNCTION

The packets of **a07-a09** indicate the measurement mode of the meter. The following table summarizes the transmitted bit for each mode. Note that the encoding of this packet is different from the encoding of FC1-FC5 switch.

For example, if the meter operates in Voltage mode, this **a07** packet is **10000000**. If **VAHZ** key is pushed to VAHZ mode, the **a08** will be **10000000** also.

	D0	D1	D2	D3	D4	D5	D6	D7
a07	V	A	Ohm	Continuity	Diode	Capacitance	Hz	Duty
a08	VAHZ	℃	℉	X	EFmode	SCAN	Clamp	LED
a09	ADP0	ADP1	ADP2	ADP3	X	X	X	X

4.4. STATUS

The a10-a13 packets indicate the whole status when ES238 is in normal operation. For example, if meter is operated at ACV / MANU range, then **a10** packet will set **011000xx**.

The format of the four packets are shown below.

	D0	D1	D2	D3	D4	D5	D6	D7
a10	AUTO	MANU	AC	DC	OL	UL	X	X
a11	SLB3	SLB2	SLB1	LBAT30s	BW_full	BW10K	BW1K	HOLD
a12	REL	ZERO	MAX	MIN	CURRENT	PHCAL	PMAX	PMIN
a13	Danger	OPEN	SHORT	DISCH	X	X	X	X

AUTO: When auto range is selected.

MANU: When manual mode is selected.

AC: When AC mode is selected.

DC: When DC mode is selected.

OL: When 'OL' is displayed on LCD.

UL: When'UL' is displayed on LCD.

SLB3/SLB2/SLB1: When low battery segment is shown on LCD.

LBAT30s: When 'Lobt' is shown on LCD.

BW1k/10k/full: Indication of low-pass-filter 3dB bandwidth.

HOLD: When Data HOLD mode is active.

REL: When Relative mode is active.

ZERO: When Zero mode is active.

MAX/MIN/CURRENT: When MAX/MIN mode is active. If CURRENT=1 means MAX/MIN symbol is blinking on LCD.

Clamp: When clamp current mode is selected.

PHCAL/PMAX/PMIN: When PEAK-hold mode is active. If PHCAL=1 means the internal calibration is in process.

Danger: Hazard voltage warning symbol is active on LCD.

OPEN: Open state is detected on Scan mode.

SHORT: Short circuit is detected on Continuity or diode mode.

DISC: The 'DisC' is shown on LCD. It means the DUT is necessary to be discharged on Cap mode.

4.5. Unit

This packet indicates the measurement unit of the LCD display.

	D0	D1	D2	D3	D4	D5	D6	D7
a14	Mega	Kilo	X	Mili	X	Micro	X	Nano

4.6. Bargraph

The a15 packet is the readings of bar-graph shown on LCD panel. B06 – B01 consist of 6-bit unsigned binary code. The B_SIGN is the sign bit of bar-graph. The result is necessary to be divided by 2 to match the bar-graph of LCD panel.

The format of this packet is shown below.

	D0	D1	D2	D3	D4	D5	D6	D7
a15	B_SIGN	X	B06	B05	B04	B03	B02	B01

4.7. CR

Carriage return: The transmitted code is **00001101**.

4.8. LF

Line feed: The transmitted code is **00001010**.

5. Miscellaneous

The conditions, which the meter turns on the buzzer, include:

(1) Changing measurement mode generates one beep.

(2) Pressing any of the push functions generates one beep, if the function is valid.

(3) Power on and re-power on generate one beep.

(4) Input overflow in voltage and current mode generates one beep every 0.3 seconds (or 3.33 beeps per second.)

(5) Continuity(diode) check generates a continuous 2KHz beep whenever the measurement is less then 30Ω(30mV)

(6) Auto power off generates a 2KHz beep which lasts for 1.5 seconds.

The following figures show the output waveform from the BUZOUT pin.

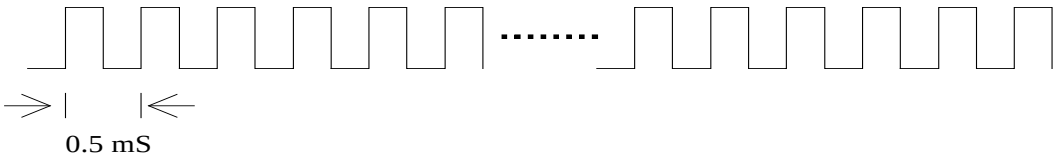

(a) Continuous 2KHz beep

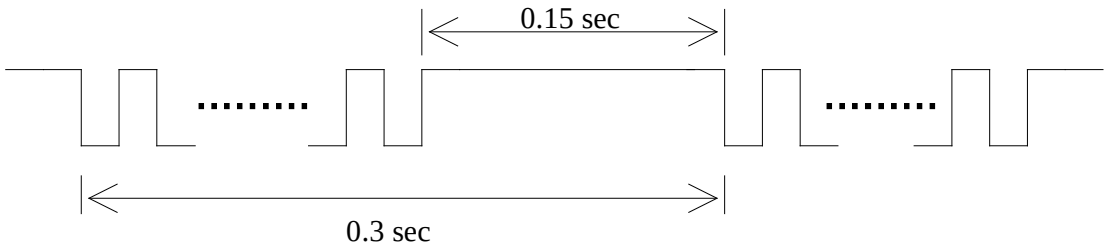

(b) 3.33 beep/sec

5.1. LCD Panel

	S01	S02	S03	S04	S05	S06	S07	S08	S09	S10	S11	S12	S13	S14	S15
BP1	SLB1	APO	SCAN	AUTO		4F	4A	4B	HOLD	3F	3A	3B	Buz	2F	2A
BP2	SLB2	RS232	MAN	AC	Minus	4E	4G	4C	DP3	3E	3G	3C	DP2	2E	2G
BP3	SLB3	Danger	bar0	DC	bar3	bar5	4D	bar8	bar10	bar12	3D	bar15	bar17	bar19	2D
BP4		bar-	bar1	bar2	bar4	bar6	bar7	bar9	bar11	bar13	bar14	bar16	bar18	bar20	bar21

	S16	S17	S18	S19	S20	S21	S22	S23	S24	S25	S26	S27	S28	S29
BP1	2B	Diode	1F	1A	1B	REL		LED		µ2	M	n	Vin	ADP0
BP2	2C	DP1	1E	1G	1C	MAX		℃	Full	m2	K	µ1	COM	ADP1
BP3	bar22	bar24	bar26	1D	bar29	MIN	Pmax	℉	10K	V	Ω	m1	mAin	ADP2
BP4	bar23	bar25	bar27	bar28	bar30		Pmin	%	1K	A	Hz	F	Ain	ADP3

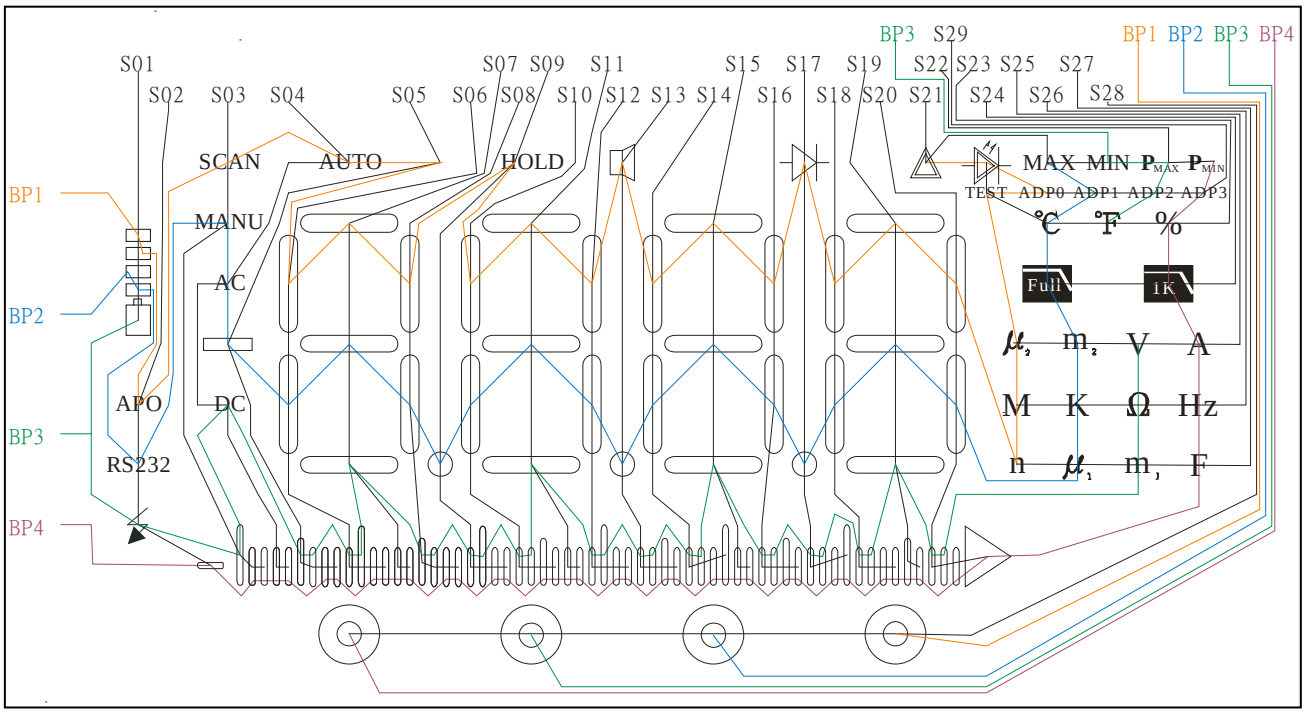

LCD Backplane Waveform

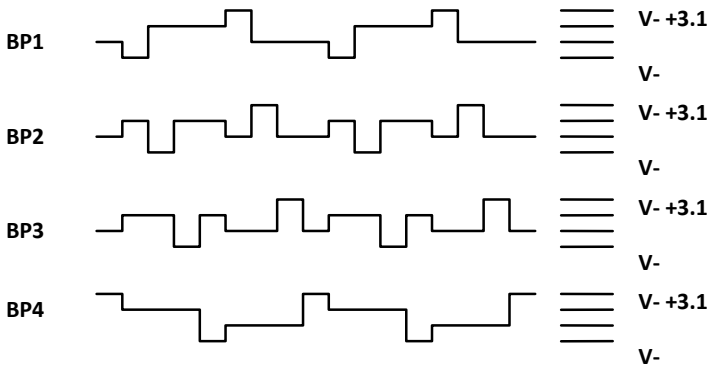

5.2. LCD Display On Condition

LCD Annunciator	Condition
V	In voltage measurement mode, and diode measurement mode.
A	In current measurement mode.
Ω	In resistance measurement mode, and continuity mode.
F	In capacitance measurement mode.
	In continuity check mode.
	In diode mode.
%	In duty cycle measurement.
Hz	In frequency mode.
ADP1	When ADP1 mode is active.
ADP2	When ADP2 mode is active.
ADP3	When ADP3 mode is active.
ADP4	When ADP4 mode is active.
DC	In DC voltage or DC current mode.
AC	In AC voltage or AC current mode.
AUTO	When automatic full scale range selection is enabled.
MANU	In manual mode.
HOLD	When HOLD function is enabled.
	When Relative function is enabled.
MAX	When MAX function is enabled.
MIN	When MIN function is enabled.
P_{MAX}	When PEAK function is enabled and show maximum value.
P_{MIN}	When PEAK function is enabled and show minimum value.
SCAN	When smart (resistance, continuity, diode, capacitance auto check mode) is active.
m_1	In capacitor measurement mode and the full scale range is in the order of mF.
μ_1	In capacitor measurement mode and the full scale range is in the order of uF.
n	In capacitor measurement mode and the full scale range is in the order of nF.
m_2	In voltage or current measurement mode and the full scale range is in the order of 10^{-3}.
μ_2	In current measurement mode and the full scale range id in the order of uA.
M	In resistance measurement mode and the full scale range is in the order of MΩ.
K	In resistance measurement mode and the full scale range is in the order of KΩ.
℃	In temperature measurement mode and when the unit is ℃.
℉	In temperature measurement mode and when the unit is ℉.
	When the reading is exceeding default hazardous live voltage or OL in DCV or ACV, the HV warning symbol will be display.
APO	When auto power off function is enabled.
SLB1	When voltage (ref. to V-) of LBAT9 pin is less than Vt1, SLB1 will disappear.
SLB2	When voltage (ref. to V-) of LBAT9 pin is less than Vt2, SLB2 will disappear.
SLB3	When SLB2 disappears for 8 seconds, SLB3 will be blinking.
RS232	When RS232 output is enabled.
	When LED measurement function is enabled.

5.3 Operating Timing

ES238 incorporates a dual slope ADC with four phases: ZI, AZ, INT and DINT. The timing of each phase are listed below.

(1) Voltage / Diode /ADP / Manual Current (for clampmeter) measurement:

Phase	High resolution	High speed
ZI	50ms	5ms
AZ	25ms	2.5ms
INT	100ms	10ms
DINT	155ms	15.5ms

(2) Current mode for multimeter/Auto Current mode for clampmeter/2-range auto voltage mode:

Phase	DC / AC	DC Lower Range
ZI	50ms	50ms
AZ	25ms	25ms
INT	100ms	1000ms
DINT	155ms	175ms

(3) Continuity / Ohm measurement:

Phase	Time
ZI	50ms
AZ	100ms
INT	25ms*
DINT	155ms

Note: INT time = 250ms for 60.00Ω range

(4) Capacitance measurement:

Range	Total Measurement Time
6.000nF	0.36sec
60.00nF	0.36sec
600.0nF	1.15sec
6.000μF	1.15sec
60.00μF	0.33sec
600.0μF	3.3sec (max)
6.000mF	1.32sec(max)
60.00mF	13.2sec(max)

(5) Frequency / Duty cycle / VAHz measurement: Every conversion takes 1.05 second.

(6) Temperature measurement: Every conversion takes 1.25 second.

Note:

1. In the frequency measurement with auto mode, if the range is changed, the internal clock rate will increase ten times and the new measurement cycle becomes 1/10 times of the original cycle until the range is stable.

- **Application Circuit**

1. Ture RMS Circuit

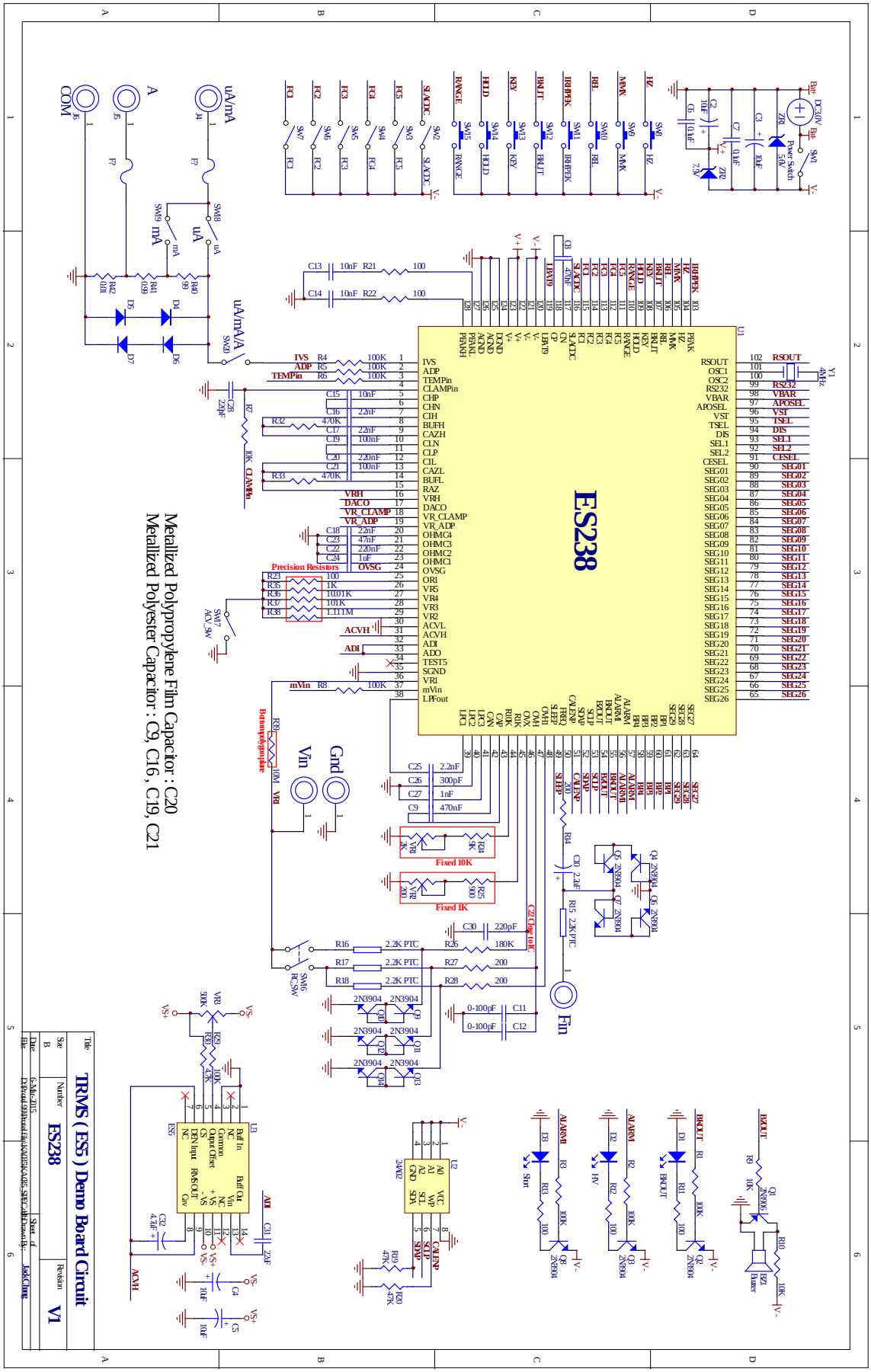

2. AVG

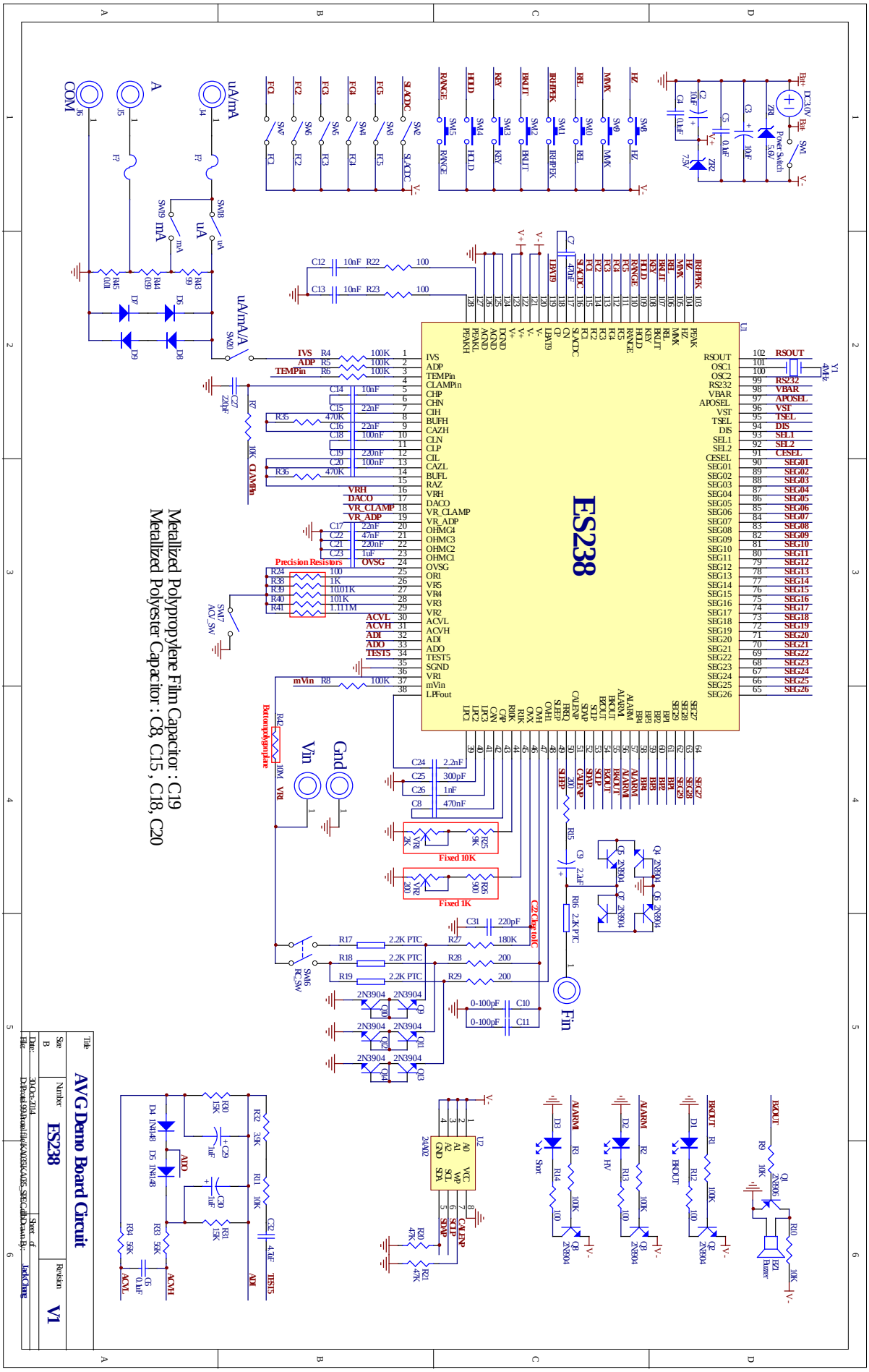
ES238
Metallized Polypropylene Film Capacitor : C19
Metallized Polyester Capacitor : C8, C15 , C18, C20
AVG Demo Board Circuit
ES238
V1

▪ Package Information

1. 128L LQFP Outline drawing

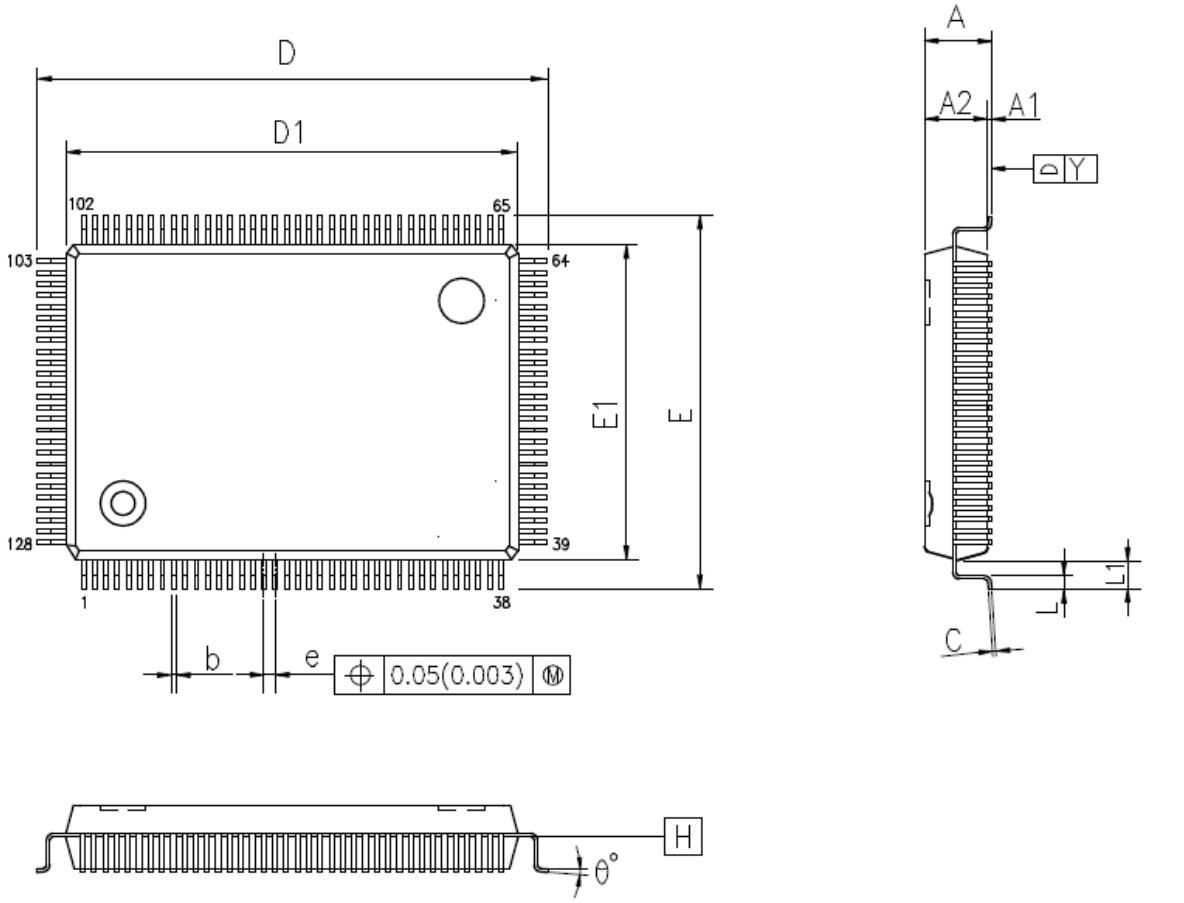

2. Dimension parameters

SYMBOLS	MIN.	NOM.	MAX.
A	–	–	1.60
A1	0.05	–	0.15
A2	1.35	1.40	1.45
b	0.17	0.22	0.27
C	0.10	0.15	0.20
D1	–	20.00 BSC	–
E1	–	14.00 BSC	–
e	–	0.50 BSC	–
D	–	22.00 BSC	–
E	–	16.00 BSC	–
L	0.45	0.60	0.75
L1	–	1.00 REF	–
Y	–	–	0.08
θ°	0°	3.5°	7°

UNIT : mm

NOTES:

1. JEDEC OUTLINE:
   MS-026 BHB.
   MS-026 BHB-HD(THERMALLY ENHANCED VARIATIONS ONLY).
2. DATUM PLANE [H] IS LOCATED AT THE BOTTOM OF THE MOLD PARTING LINE COINCIDENT WITH WHERE THE LEAD EXITS THE BODY.
3. DIMENSIONS E1 AND D1 DO NOT INCLUDE MOLD PROTRUSION. ALLOWABLE PROTRUSION IS 0.25 mm PER SIDE. DIMENSIONS E AND E DO INCLUDE MOLD MISMATCH AND ARE DETERMINED AT DATUM PLANE [H].
4. DIMENSION b DOES NOT INCLUDE DAMBAR PROTRUSION .