Micro Chip Fuse

Planed final production : Sep.2011

Type: **ERBSE**
ERBSD



■ Features

- Small size
- Fast-acting and withstanding in-rush current characteristics

■ Approved Safety Standards

- UL248-14 : File No.E194052
- c-UL(CSA)C22.2 No.248-14 : File No.E194052

■ Explanation of Part Numbers

1	2	3	4	5	6	7	8	9	10
E	R	B	S	E	1	R	0	0	U

Product Code	
Micro Chip Fuse	

Fusing Characteristics	
S	Fast-acting and withstanding in-rush current

Product shape	
E	1608 size (1.6 mm×0.8 mm)
D	1005 size (1.0 mm×0.5 mm)

Rated Current (A)			
0R25	0.25 A	1R50	1.5 A
0R31	0.315 A	2R00	2.0 A
0R37	0.375 A	2R50	2.5 A
0R50	0.5 A	3R00	3.0 A
0R75	0.75 A	4R00	4.0 A
1R00	1.0 A	5R00	5.0 A
1R25	1.25 A		

Packaging	
U	Punched carrier taping

■ Construction

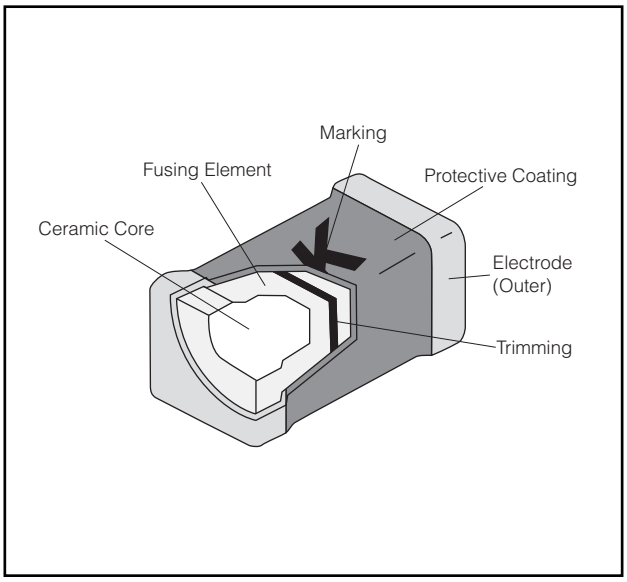

■ Dimensions in mm (not to scale)

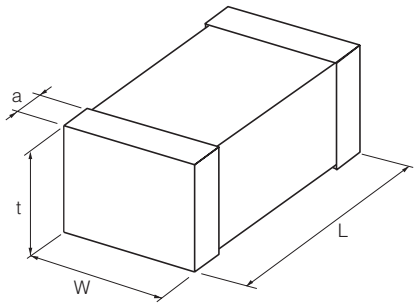

Type (inches)	Dimensions (mm)			
	L	W	a	t
ERBSE (0603)	$1.60^{\pm0.15}$	$0.80^{\pm0.15}$	$0.30^{\pm0.20}$	$0.70^{\pm0.10}$
ERBSD (0402)	$1.00^{\pm0.10}$	$0.50^{\pm0.10}$	$0.20^{\pm0.15}$	$0.40^{\pm0.10}$

Design and specifications are each subject to change without notice. Ask factory for the current technical specifications before purchase and/or use.
Should a safety concern arise regarding this product, please be sure to contact us immediately.

■ Ratings

● 1608 Size

Part No.	ERBSE□R□□U									
	0R50	0R75	1R00	1R25	1R50	2R00	2R50	3R00	4R00	5R00
Rated Current (A)	0.5	0.75	1.0	1.25	1.5	2.0	2.5	3.0	4.0	5.0
Marking Code	F	G	H	J	K	N	O	P	S	T
Internal R (mΩ) at 25 °C max.	370	245	155	120	90	60	48	36	28	20
Fusing Current/Fusing Time (at 25 °C)	Rated Current ×100 %/4 hours min.									
	Rated Current ×200 %/5 seconds max.									
	Rated Current ×300 %/0.2 seconds max.									
Rated Voltage (Open Circuit Voltage)	32 VDC									
Interrupting Rating (at Rated Voltage)	50 A								35 A	
Category Temp. Range (Operating Temp. Range)	−40 °C to +100 °C									

● 1005 Size

Part No.	ERBSD□R□□U										
	0R25	0R31	0R37	0R50	0R75	1R00	1R25	1R50	2R00	2R50	3R00
Rated Current (A)	0.25	0.315	0.375	0.5	0.75	1.0	1.25	1.5	2.0	2.5	3.0
Marking Code	V	X	Y	F	G	H	J	K	N	O	P
Internal R (mΩ) at 25 °C max.	700	570	460	330	200	135	100	80	53	40	33
Fusing Current/Fusing Time (at 25 °C)	Rated Current ×100 %/4 hours min.										
	Rated Current ×200 %/5 seconds max.										
	Rated Current ×300 %/0.2 seconds max.										
Rated Voltage (Open Circuit Voltage)	24 VDC										
Interrupting Rating (at Rated Voltage)	35 A										
Category Temp. Range (Operating Temp. Range)	−40 °C to +100 °C										

Power Derating Curve

- For Circuit, current rating shall be derated in accordance with the figure on the right.
- This current derating curve is for fusing characteristics.

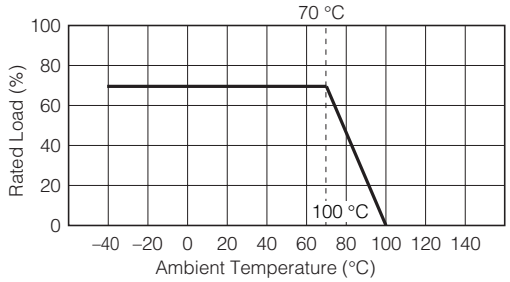

Design and specifications are each subject to change without notice. Ask factory for the current technical specifications before purchase and/or use.
Should a safety concern arise regarding this product, please be sure to contact us immediately.

■ Fusing Characteristics (25 °C typical)

● I–t Characteristics

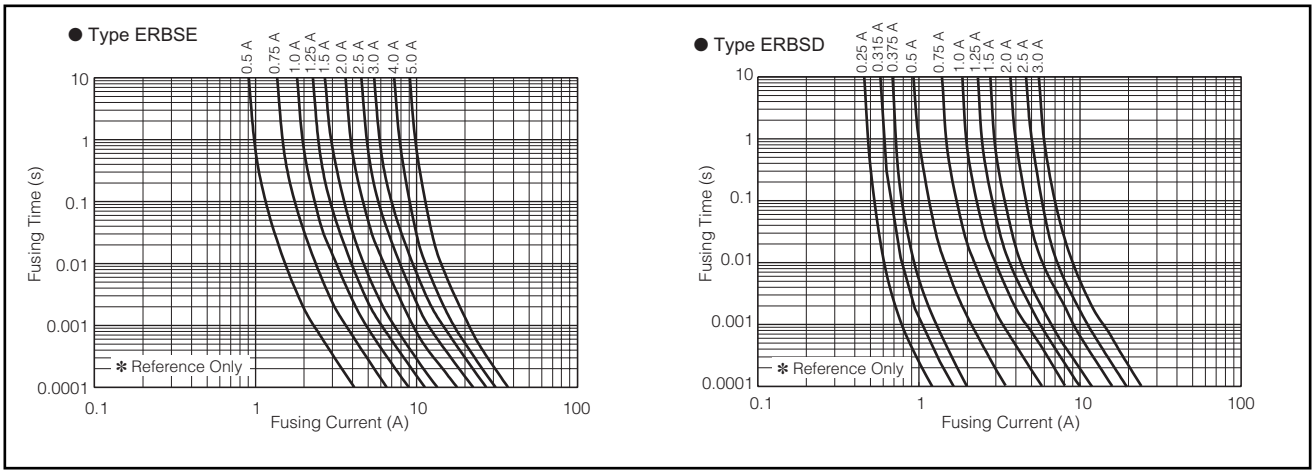

● I^2t–t Characteristics

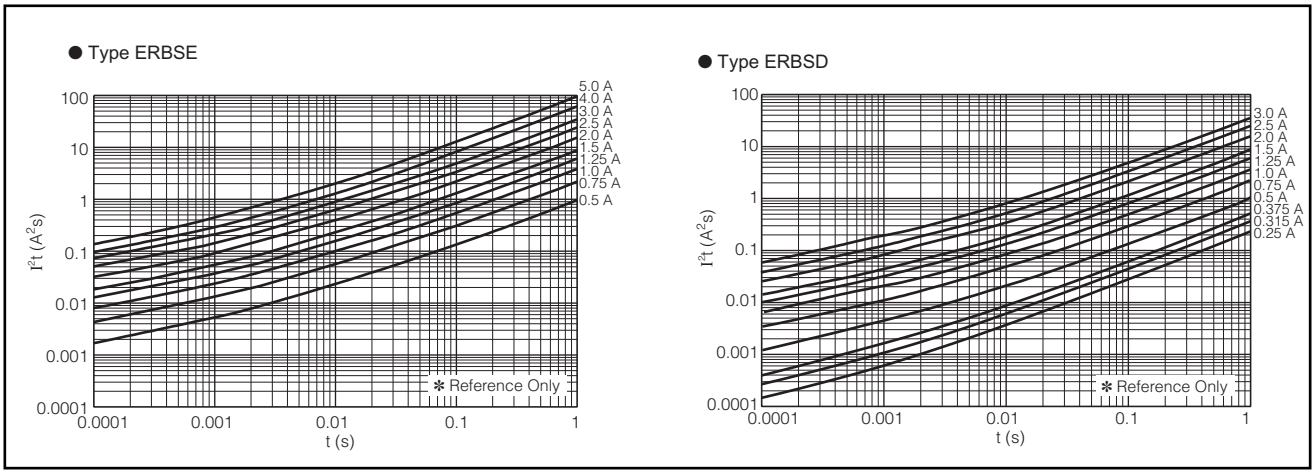

■ Packaging Methods

● Standard Quantity

Type	Kind of Taping	Pitch (P_1)	Quantity
ERBSE	Punched Carrier Taping	4 mm	5000 pcs./ reel
ERBSD		2 mm	10000 pcs./ reel

● Punched Carrier Taping

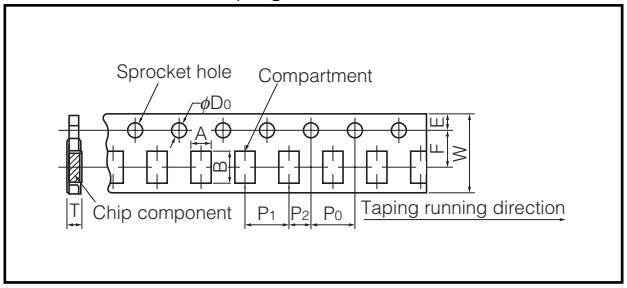

Dimensions (mm)	Type	A	B	W	F	E
	ERBSE	$1.00^{\pm0.10}$	$1.80^{\pm0.20}$	$8.00^{\pm0.20}$	$3.50^{\pm0.05}$	$1.75^{\pm0.10}$
	ERBSD	$0.65^{\pm0.05}$	$1.15^{\pm0.05}$			

Dimensions (mm)	Type	P_1	P_2	P_0	ϕD_0	T
	ERBSE	$4.00^{\pm0.10}$	$2.00^{\pm0.05}$	$4.00^{\pm0.10}$	$1.50^{+0.10}_{-0}$	$0.85^{\pm0.07}$
	ERBSD	$2.00^{\pm0.10}$				$0.60^{\pm0.07}$

● Taping Reel

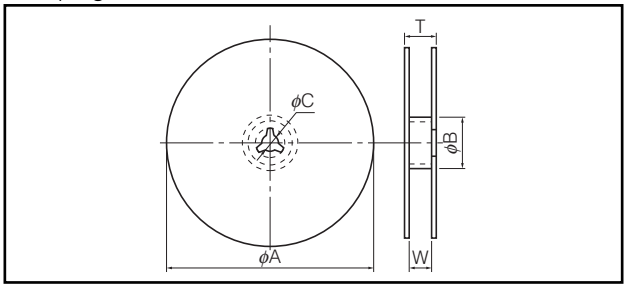

Dimensions (mm)	ϕA	ϕB	ϕC	W	T
	$180.0^{+0}_{-3.0}$	60 min.	$13.0^{\pm1.0}$	$9.0^{\pm1.0}$	$11.4^{\pm1.0}$

Design and specifications are each subject to change without notice. Ask factory for the current technical specifications before purchase and/or use.
Should a safety concern arise regarding this product, please be sure to contact us immediately.

■ Recommended Land Pattern

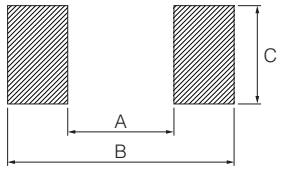

Type	Dimensions (mm)		
	A	B	C
ERBSE	0.9	2.1 to 2.3	0.8
ERBSD	0.6	1.4 to 1.6	0.5

■ Recommended Soldering Conditions

Recommendations and precautions are described below.

● Recommended soldering conditions for reflow

·Reflow soldering shall be performed a maximum of two times.
·Please contact us for additional information when used in conditions other than those specified.
·Please measure the temperature of the terminals and study every kind of solder and printed circuit board for solderability before actual use.

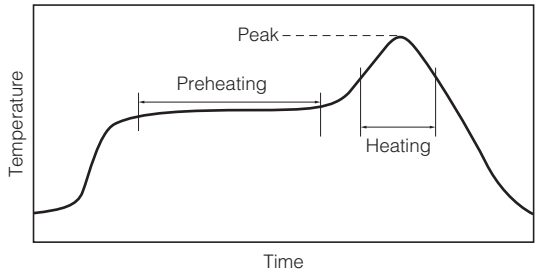

For soldering (Example : Sn/Pb)

	Temperature	Time
Preheating	140 °C to 160 °C	60 s to 120 s
Main heating	Above 200 °C	30 s to 40 s
Peak	235 ± 5 °C	max. 10 s

For lead-free soldering (Example : Sn/Ag/Cu)

	Temperature	Time
Preheating	150 °C to 180 °C	60 s to 120 s
Main heating	Above 230 °C	30 s to 40 s
Peak	max. 260 °C	max. 10 s

<Repair with hand soldering>

- Preheat with a blast of hot air or similar method. Use a soldering iron with a tip temperature of 350 °C or less. Solder each electrode for 3 seconds or less.
- Never touch this product with the tip of a soldering iron.

⚠Safety Precautions

The following are precautions for individual products. Please also refer to the precautions common to EMI Filters, Fuses, and Sensors(MR Elements) shown on page EX2 of this catalog.

1. Set the rated current so that the current passing through the Micro Chip Fuses (hereafter called the fuses) under normal conditions is within 70% of the rated current.
2. Do not continuously pass a current exceeding the rated current through the fuses.
3. If a pulse exceeding the rated current is applied, such as a rush current or surge current at power-on, take care not to cause unwanted fusing. Calculate the I^2t value of the pulse and check the tolerance to the number of pulses according to the I^2t-t characteristic curve before deciding to use the fuses. Before checking the tolerance, consult our sales staff in advance.
4. The fuses are designed to be blown out by a current that is double or greater than the rated current. Ensure that the abnormal current generated when a circuit abnormality occurs in your product is at least double or greater than the rated current of the fuses. In addition, ensure that the abnormal current of your product does not exceed the maximum interrupting current of the fuses.
5. The fuses are designed to be used on the secondary side of a power supply. Do not use them on the primary side.
6. Ensure that the voltage applied to the fuses are within their rated voltage.
7. The fusing characteristics of the fuses are affected by the ambient temperature. Before use, mount the fuses on your products and carefully check and evaluate their operating temperature range.

⚠Safety Precautions (Common precautions for EMI Filters, Fuses, and Sensors[MR Elements])

- When using our products, no matter what sort of equipment they might be used for, be sure to make a written agreement on the specifications with us in advance. The design and specifications in this catalog are subject to change without prior notice.
- Do not use the products beyond the specifications described in this catalog.
- This catalog explains the quality and performance of the products as individual components. Before use, check and evaluate their operations when installed in your products.
- Install the following systems for a failsafe design to ensure safety if these products are to be used in equipment where a defect in these products may cause the loss of human life or other significant damage, such as damage to vehicles (automobile, train, vessel), traffic lights, medical equipment, aerospace equipment, electric heating appliances, combustion/gas equipment, rotating equipment, and disaster/crime prevention equipment.

✻ Systems equipped with a protection circuit and a protection device
✻ Systems equipped with a redundant circuit or other system to prevent an unsafe status in the event of a single fault

(1) Precautions for use

- These products are designed and manufactured for general and standard use in general electronic equipment (e.g. AV equipment, home electric appliances, office equipment, information and communication equipment)
- These products are not intended for use in the following special conditions. Before using the products, carefully check the effects on their quality and performance, and determine whether or not they can be used.
  1. In liquid, such as water, oil, chemicals, or organic solvent
  2. In direct sunlight, outdoors, or in dust
  3. In salty air or air with a high concentration of corrosive gas, such as Cl_2, H_2S, NH_3, SO_2, or NO_2
  4. Electric Static Discharge (ESD) Environment
     These components are sensitive to static electricity and can be damaged under static shock (ESD).
     Please take measures to avoid any of these environments.
     Smaller components are more sensitive to ESD environment.
  5. Electromagnetic Environment
     Avoid any environment where strong electromagnetic waves exist.
  6. In an environment where these products cause dew condensation
  7. Sealing or coating of these products or a printed circuit board on which these products are mounted, with resin or other materials
- These products generate Joule heat when energized. Carefully position these products so that their heat will not affect the other components.
- Carefully position these products so that their temperatures will not exceed the category temperature range due to the effects of neighboring heat-generating components. Do not mount or place heat-generating components or inflammables, such as vinyl-coated wires, near these products (except Thermal Cutoffs).
- Note that non-cleaning solder, halogen-based highly active flux, or water-soluble flux may deteriorate the performance or reliability of the products.
- Carefully select a flux cleaning agent for use after soldering. An unsuitable agent may deteriorate the performance or reliability. In particular, when using water or a water-soluble cleaning agent, be careful not to leave water residues. Otherwise, the insulation performance may be deteriorated.

(2) Precautions for storage

The performance of these products, including the solderability, is guaranteed for a year from the date of arrival at your company, provided that they remain packed as they were when delivered and stored at a temperature of 5 °C to 35 °C and a relative humidity of 45 % to 85 %. (Micro Chip Fuses: Guaranteed for 6 months from the date of arrival at your company)
The performance of EMI Filters is guaranteed for 6 months or a year from the outgoing inspection date indicated on the packages, provided that they are stored at a temperature of -5 °C to +40 °C and a relative humidity of 40 % to 60 %. Check the guarantee period in the specifications. The performance of Thermal Cutoffs is guaranteed for a year from the outgoing inspection date indicated on the packages, provided that they are stored at a temperature of -10 °C to +40 °C and a relative humidity of 30 % to 75 %.

Even within the above guarantee periods, do not store these products in the following conditions. Otherwise, their electrical performance and/or solderability may be deteriorated, and the packaging materials (e.g. taping materials) may be deformed or deteriorated, resulting in mounting failures.

1. In salty air or in air with a high concentration of corrosive gas, such as Cl_2, H_2S, NH_3, SO_2, or NO_2
2. In direct sunlight

<Package markings>
Package markings include the product number, quantity, and country of origin.
In principle, the country of origin should be indicated in English.