ERA83-004 (1A)

(40V / 1A)

SCHOTTKY BARRIER DIODE

■ Outline drawings, mm

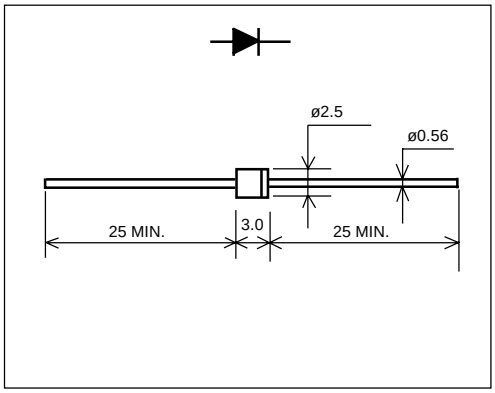

■ Features

- Low V_F
- Super high speed switching
- High reliability by planer design
- Ultra small package, possible for 5mm pitch automatic insertion

■ Marking

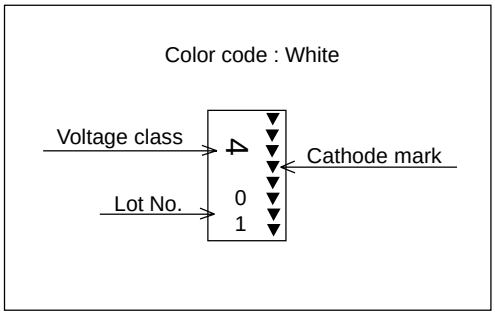

■ Applications

- High speed switching

■ Maximum ratings and characteristics

● Absolute maximum ratings

Item	Symbol	Conditions	Rating	Unit
Repetitive peak reverse voltage	V_{RRM}		40	V
Non-repetitive peak reverse voltage	V_{RSM}	tw=500ns, duty=1/40	48	V
Average forward current	$I_{F(AV)}$	Square wave, duty=1/2 Tl=115°C	1.0*	A
Surge current	I_{FSM}	Sine wave 10ms	50	A
Operating junction temperature	T_j		-40 to +150	°C
Storage temperature	T_{stg}		-40 to +150	°C

* Mounted on printed cirrcuit boad (10 x 10mm)

● Electrical characteristics (Ta=25°C Unless otherwise specified)

Item	Symbol	Conditions	Max.	Unit
Forward voltage drop	V_{FM}	I_{FM}=1A	0.55	V
Reverse current	I_{RRM}	$V_R=V_{RRM}$	2.0	mA

■ Characteristics

Forward Characteristic (typ.)

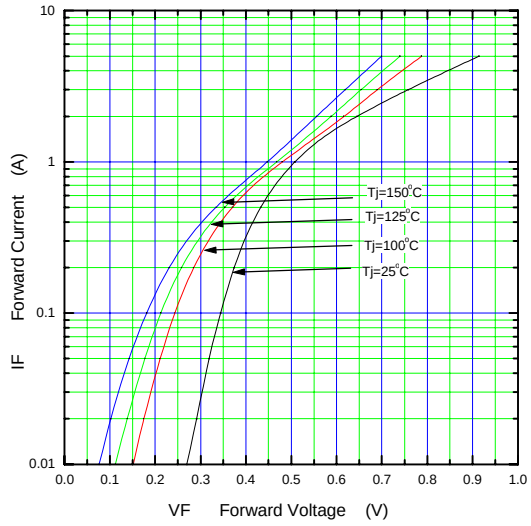

Reverse Characteristic (typ.)

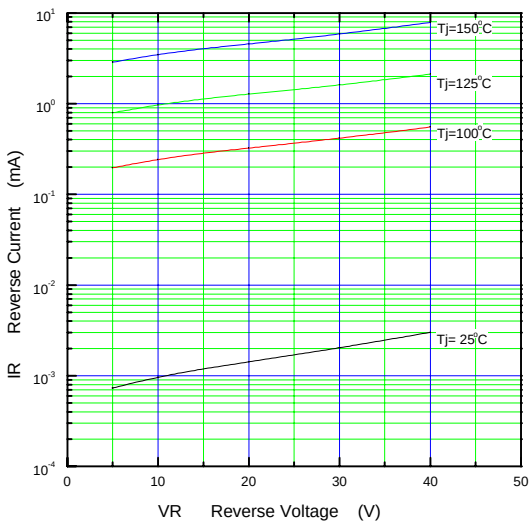

Forward Power Dissipation

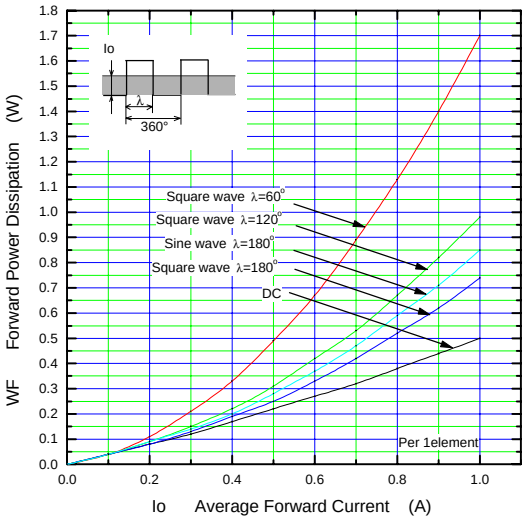

Reverse Power Dissipation

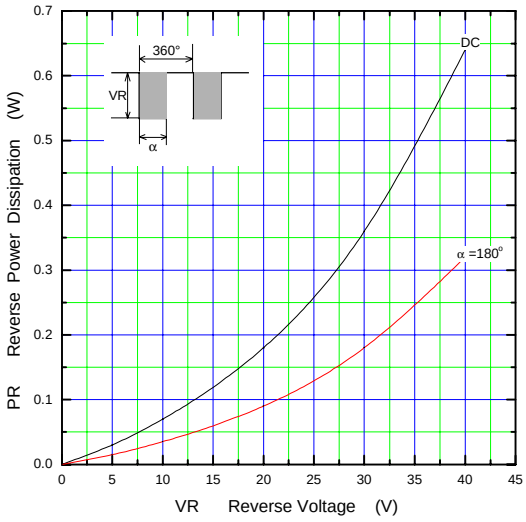

Current Derating (Io-Ta)

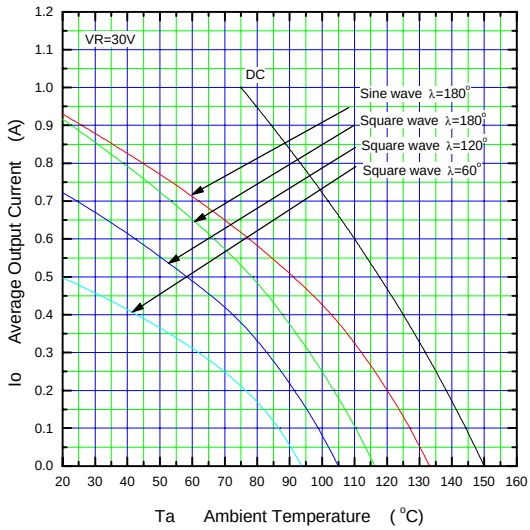

Current Derating (Io-Tl)

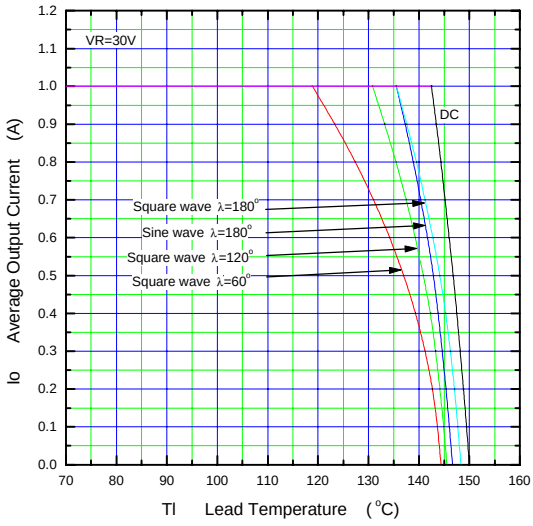

Junction Capacitance Characteristic (typ.)

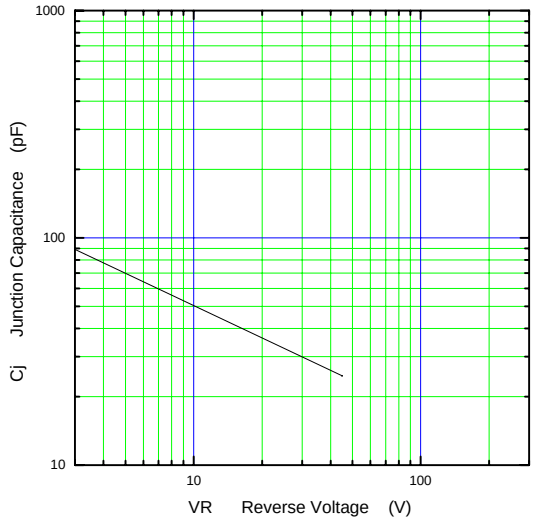

Surge Capability

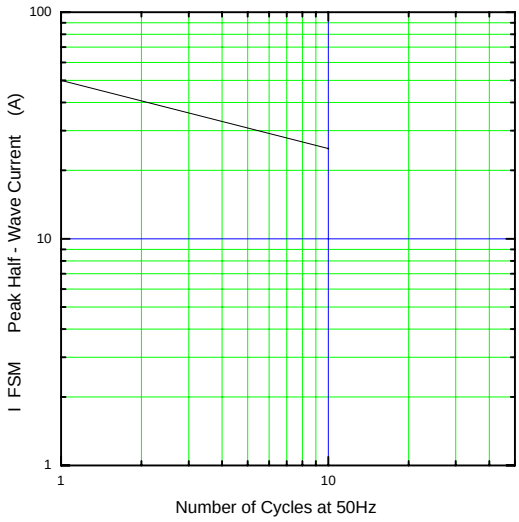

Transient Thermal Impedance

