PCA ELECTRONICS INC.

Surface Mount Low Power Push-Pull Transformers

EPC3126G-X



- Designed for use with Maxim Max 253/845
- Operating Temperature : -40°C to +85°C
- UL1446 Class F Insulating System
- UL94-V0 Recognized Materials
- Teflon FEP nsulation
- Up to 1 Watt

Electrical Parameters @ 25° C

PCA Part Number	Voltage (V)		Primary OCL (µH Typ.)	Turns Ratio (Pri. to Sec.)	ET (V-µSec.)	Duty Cycle (%)	Rectification (Half or Full Wave)
	V in	V out	@ 100 KHz, 0.1 Vrms	Pri. :Sec.	@ 350 KHz		Connections
EPC3126G-1	5	15	793	1CT:2CT	11	75	Voltage Doubler
	3.3	5	793	1CT:2CT	11	75	† Output Center Tap
EPC3126G-2	5	5	793	1CT:1.3CT	11	75	† Output Center Tap
	5	10	793	1CT:1.3CT	11	75	Voltage Doubler
EPC3126G-3	5	10	793	1CT:2.6CT	11	77	† Output Center Tap
EPC3126G-4	5	12	793	1CT:3CT	11	80	† Output Center Tap
	5	24	793	1CT:3CT	11	80	Voltage Doubler
EPC3126G-5	3.3	5	793	1CT:1CT	11	75	Voltage Doubler
EPC3126G-6	5	5	793	1CT:0.6CT	11	83	Voltage Doubler
EPC3126G-7	5	12	793	1CT:1.5CT	11	80	Voltage Doubler

• **Switching Frequency :** 250 KHz - 1 MHz • **Isolation :** 4500 Vrms (1 minute) • † **Connections :** Output Center Tap as Common/Return •

Schematic

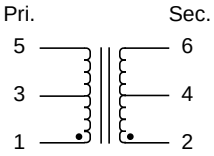

Package

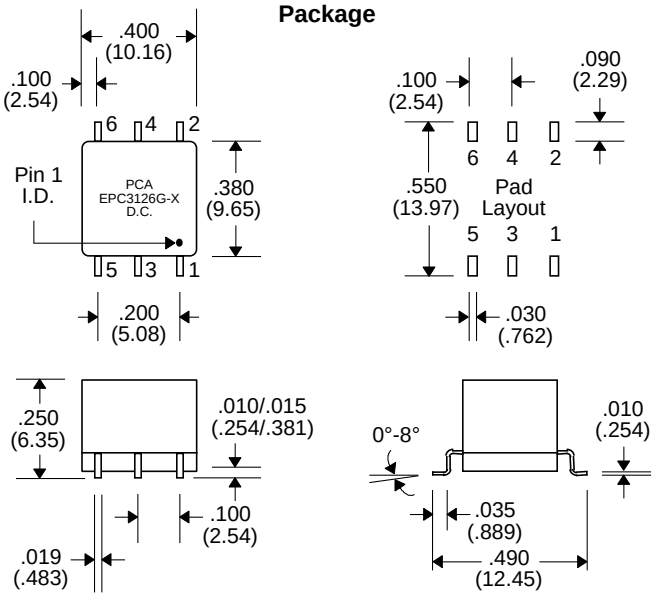

Application

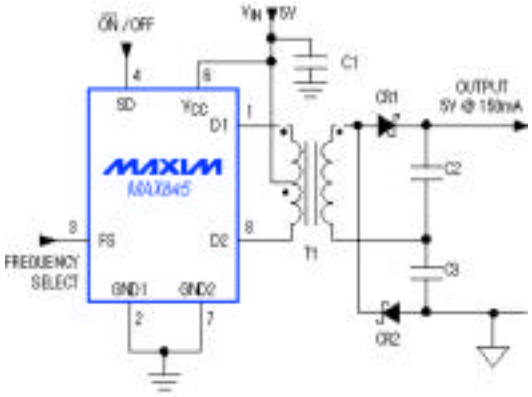

Unless Otherwise Specified Dimensions are in Inches /mm ± .010 /.25

PCA ELECTRONICS, INC.
16799 SCHOENBORN ST.
NORTH HILLS, CA 91343

Product performance is limited to specified parameters. Data is subject to change without prior notice.

TEL: (818) 892-0761
FAX: (818) 894-5791
http://www.pca.com