VDSL HYBRID Transformer

- Designed for Infineon Technologies VDSL Solutions
- Robust Construction allows for IR/VP processes
- Isolation : 1500Vrms

Electrical Parameters @ 25° C

PCA Part Number	Cable Side Impedance (Ω)	TX/RX Impedance (Ω)	R Impedance (Ω)	Insertion Loss † (dB Max.)	Return Loss (dB Min.)	TransHybrid Isolation (dB Typ.)	DCR (Ω Typ.)
				900 KHz-7.9 MHz	900 KHz-7.9 MHz	900 KHz-7.9 MHz	---
EPB5189G	100	40/270	100	-0.5	-15	-20	0.30
EPB5190G	135	40/270	135	-0.5	-15	-20	0.30
EPB5193G	120	40/270	120	-0.5	-15	-20	0.30

• † **Note :** Referenced to 2.67 MHz Center Frequency •

Schematic

(Configured as Hybrid Circuit)

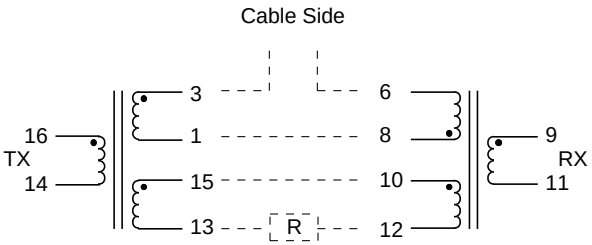

Package

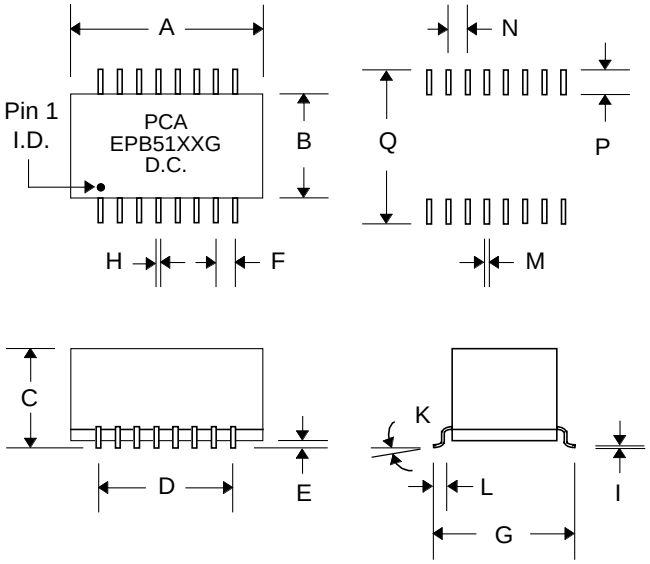

Dimensions

Dim.	(Inches) Min.	Max.	Nom.	(Millimeters) Min.	Max.	Nom.
A	.490	.510	.500	12.45	12.95	12.60
B	.260	.280	.270	6.60	7.11	6.86
C	.190	.210	.200	4.83	5.33	5.08
D	---	---	.350	---	---	8.89
E	.005	.015	.013	.127	.381	.330
F	---	---	.050	---	---	1.27
G	.360	.380	.370	9.14	9.65	9.40
H	.016	.022	.018	.406	.559	.457
I	---	---	.010	---	---	.254
J	---	---	.075	---	---	1.91
K	0°	8°	4°	0°	8°	4°
L	.025	.045	.035	.635	1.14	.889
M	---	---	.030	---	---	.762
N	---	---	.050	---	---	1.27
P	---	---	.075	---	---	1.91
Q	---	---	.427	---	---	10.85

PCA ELECTRONICS, INC.
6799 SCHOENBORN ST.
NORTH HILLS, CA 91343

Product performance is limited to specified parameters. Data is subject to change without prior notice.

TEL: (818) 892-0761
FAX: (818) 894-5791
http://www.pca.com