PCA ELECTRONICS INC.

VDSL Hybrid / Filter Module

EPB5118G & EPB5118G-RC

- Designed for CO side application
- Optimized for Long and Short Haul Solutions
- Add “-RC” after part number for RoHS Compliant
- Robust construction for IR processes
- Isolation: 1500 Vrms

Electrical Parameters @ 25°C

	Cut-off Frequency (MHz)		Insertion Loss (dB Max.)		Return Loss (dB Min.)		Attenuation (dB Min.)				Common Mode Rejection (dB Min.)	Crosstalk (dB Min.)	
	Lower Band	Upper Band	1.0-2.5 MHz	4.5-6.3 MHz	1.0-2.5 MHz	4.5-6.3 MHz	@ 0.2 MHz	@ 3.4 MHz	@ 4.1 MHz	@ 40 MHz	0.3-100 MHz	0.1-2.5 MHz	4.5-100 MHz
BF1	0.9	3.4	-2.5	---	-12	---	-50	---	-20	-30	-40	-40	-40
BF2	4.1	7.9	---	-2.5	---	-12	-50	-20	---	-50			

Package

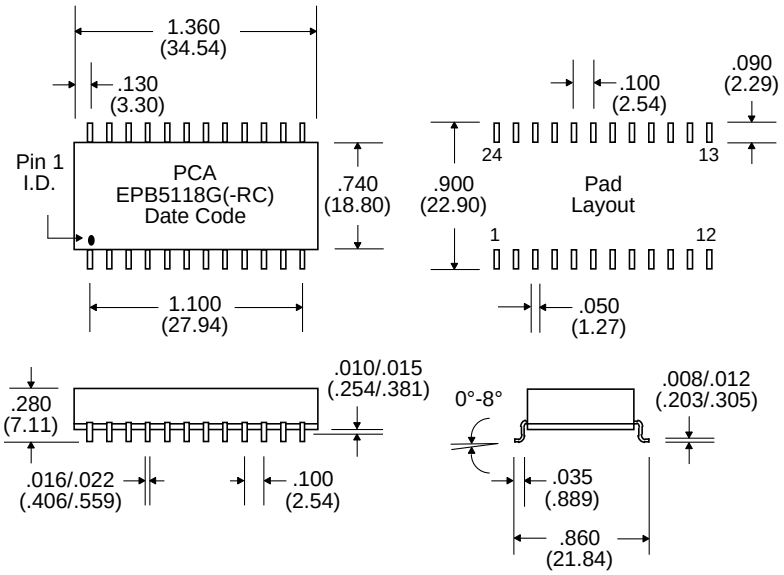

Schematic

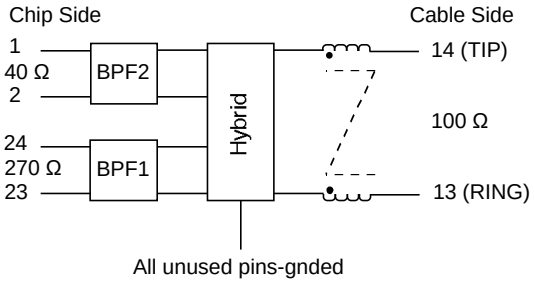

Notes :	EPB5118G	EPB5118G-RC
1. Lead Finish	SnPb	Hot Tin Dip (Sn) †
2. Peak Temperature Rating	225°C	245°C
3. Moisture Sensitive Levels	MSL = 3 (168 Hours, ≤30°C/60%RH)	MSL = 4 (72 Hours, ≤30°C/60%RH)
4. Weight	4.77 grams	4.77 grams
5. Packaging Information (Tube)	15 pieces/tube	15 pieces/tube
(Tape & Reel)	TBD pieces/13” reel	TBD pieces/13” reel

† Lead Material : Ni Barrier over Cu

Unless Otherwise Specified Dimensions are in Inches /mm ± .010 /.25

PCA ELECTRONICS, INC.
16799 SCHOENBORN ST.
NORTH HILLS, CA 91343

Product performance is limited to specified parameters. Data is subject to change without prior notice.

TEL: (818) 892-0761
FAX: (818) 894-5791
http://www.pca.com