PCA ELECTRONICS INC.

Common Mode Choke

EPA3308A & EPA3308A-RC



- Common Mode Choke for EMI Reduction
- Robust Construction to meet tough reflow process
- Add "-RC" after part number for RoHS Compliant
- Rated Current : 500 mA
- 1500 Vrms Isolation

Electrical Parameters @ 25° C

Primary Inductance (µH Min.)	**Leakage Inductance** (µH Max.)	**DCR** (Ω Max.)
@ 100 KHz, 0.1 Vrms	@ 100 KHz, 0.1 Vrms	
35	0.3	0.75

Package

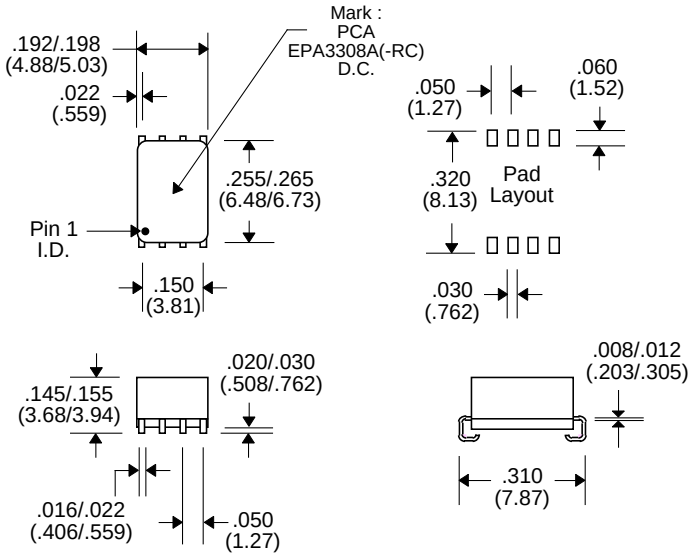

Schematic

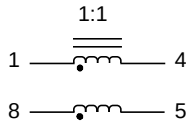

Notes :		**EPA3308A**	**EPA3308A-RC**
1. Lead Finish		SnPb	Hot Tin Dip (Sn) †
2. Peak Temperature Rating		225°C	250°C
3. Moisture Sensitive Levels		MSL = 3 (168 Hours, ≤30°C/60%RH)	MSL = 4 (72 Hours, ≤30°C/60%RH)
4. Weight		TBD grams	TBD grams
5. Packaging Information (*Add "TR" to end of part number, but in front of "-RC"when placing order)	(Tube)	TBD pieces/tube	TBD pieces/tube
	(Tape & Reel)	TBD pieces/13" reel (*EPA3308ATR)	TBD pieces/13" reel (*EPA3308ATR-RC)

† Leadframe Material : Matte Tin with Ni Barrier

Unless Otherwise Specified Dimensions are in Inches /mm ± .010 /.25

PCA ELECTRONICS, INC.
16799 SCHOENBORN ST.
NORTH HILLS, CA 91343

Product performance is limited to specified parameters. Data is subject to change without prior notice.

TEL: (818) 892-0761
FAX: (818) 894-5791
http://www.pca.com