14 Pin DIP Triple TTL High Speed Delay Line

DELAY TIME ±5% or 2nS†	PART NUMBER	DELAY TIME ±5% or 2nS†	PART NUMBER	DELAY TIME ±5% or 2nS†	PART NUMBER
5	EPA313-5	19	EPA313-19	65	EPA313-65
6	EPA313-6	20	EPA313-20	70	EPA313-70
7	EPA313-7	21	EPA313-21	75	EPA313-75
8	EPA313-8	22	EPA313-22	80	EPA313-80
9	EPA313-9	23	EPA313-23	85	EPA313-85
10	EPA313-10	24	EPA313-24	90	EPA313-90
11	EPA313-11	25	EPA313-25	95	EPA313-95
12	EPA313-12	30	EPA313-30	100	EPA313-100
13	EPA313-13	35	EPA313-35	125	EPA313-125
14	EPA313-14	40	EPA313-40	150	EPA313-150
15	EPA313-15	45	EPA313-45	175	EPA313-175
16	EPA313-16	50	EPA313-50	200	EPA313-200
17	EPA313-17	55	EPA313-55	225	EPA313-225
18	EPA313-18	60	EPA313-60	250	EPA313-250

†Whichever is greater. Delay Times referenced from input to leading edges at 25°C, 5.0V, with no load.

DC Electrical Characteristics

	Parameter	Test Conditions	Min	Max	Unit
V_{OH}	High-Level Output Voltage	V_{CC} = min. V_{IL} = max. I_{OH} = max	2.7		V
V_{OL}	Low-Level Output Voltage	V_{CC} = min. V_{IH} = min. I_{OL} = max		0.5	V
V_{IK}	Input Clamp Voltage	V_{CC} = min. I_I = I_{IK}		-1.2V	V
I_{IH}	High-Level Input Current	V_{CC} = max. V_{IN} = 2.7V		50	µA
		V_{CC} = max. V_{IN} = 5.25V		1.0	mA
I_{IL}	Low-Level Input Current	V_{CC} = max. V_{IN} = 0.5V		-2	mA
I_{OS}	Short Circuit Output Current	V_{CC} = max. V_{OUT} = 0. (One output at a time)	-40	-100	mA
I_{CCH}	High-Level Supply Current	V_{CC} = max. V_{IN} = OPEN		115	mA
I_{CCL}	Low-Level Supply Current	V_{CC} = max. V_{IN} = 0		115	mA
T_{RO}	Output Rise Time	Td ≤ 500 nS (0.75 to 2.4 Volts)		4	nS
N_H	Fanout High-Level Output	V_{CC} = max. V_{OH} = 2.7V		20 TTL LOAD	
N_L	Fanout Low-Level Output	V_{CC} = max. V_{OL} = 0.5V		10 TTL LOAD	

Schematic

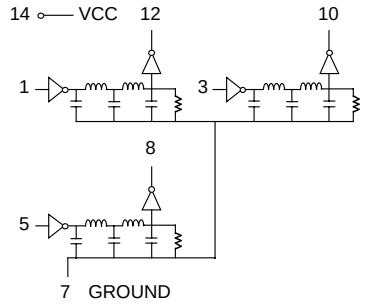

Recommended Operating Conditions

		Min	Max	Unit
V_{CC}	Supply Voltage	4.75	5.25	V
V_{IH}	High-Level Input Voltage	2.0		V
V_{IL}	Low-Level Input Voltage		0.8	V
I_{IK}	Input Clamp Current		-18	mA
I_{OH}	High-Level Output Current		-1.0	mA
I_{OL}	Low-Level Output Current		20	mA
P_W*	Pulse Width of Total Delay	40		%
d*	Duty Cycle		40	%
T_A	Operating Free-Air Temperature	0	+70	°C

**These two values are inter-dependent.*

Input Pulse Test Conditions @ 25° C

			Unit
E_{IN}	Pulse Input Voltage	3.2	Volts
P_W	Pulse Width % of Total Delay	110	%
T_{RI}	Pulse Rise Time (0.75 - 2.4 Volts)	2.0	nS
P_{RR}	Pulse Repetition Rate @ Td ≤ 200 nS	1.0	MHz
	Pulse Repetition Rate @ Td > 200 nS	100	KHz
V_{CC}	Supply Voltage	5.0	Volts

Package Dimensions

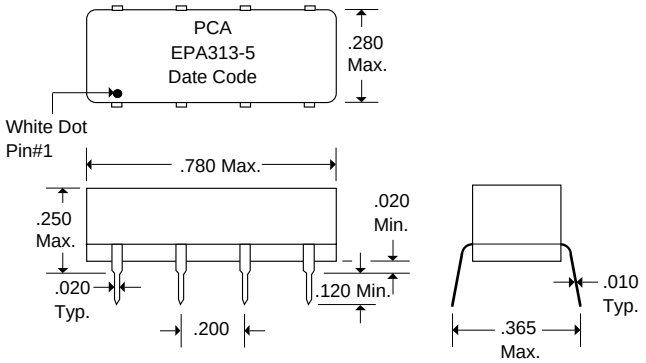

Unless Otherwise Noted Dimensions in Inches
Tolerances:
Fractional = ± 1/32
.XX = ± .030 .XXX = ± .010

PCA ELECTRONICS INC.

16799 SCHOENBORN ST.
NORTH HILLS, CA 91343
TEL: (818) 892-0761
FAX: (818) 894-5791