CUI INC

PART NUMBER: EPA240050-P5R-SZ **DESCRIPTION:** linear power supply

SPECIFICATIONS

output voltage	24 V ac at 500 mA	
rated input voltage	120 V ac	
primary rated voltage	120 V ac 60 Hz 18 W	
primary exciting current	30 mA rms max.	
secondary rated voltage & current	no load voltage (max.)	30.3 V
	no load power consumption (max.)	0.5 W
	full load voltage (500 mA)	24 V ±5%
temperature rise of primary winding (full load)	70°C max. using resistance method	
insulation resistance	≥ 100 M Ohm at 500 Vdc	
HI-POT test	primary to secondary	1240 V ac at 2 mA for 1 minute
	primary to secondary	1600 V ac at 2 mA for 1 second
	primary winding to secondary winding	1600 V ac at 2 mA for 1 second
	primary winding to core	1600 V ac at 2 mA for 1 second
	secondary winding to core	750 V ac at 2 mA for 1 second
safety standard	UL/cUL	
RoHS compliant	yes	
efficiency	meets Energy Star / CEC Level IV	
test conditions	ambient temp	40±2°C
	humidity	90~95% 96 hours at Full Load
	rated voltage	8 hours at full load
adapter color	case	black
	cord	black

PART NUMBER: EPA240050-P5R-SZ **DESCRIPTION:** linear power supply

LABEL

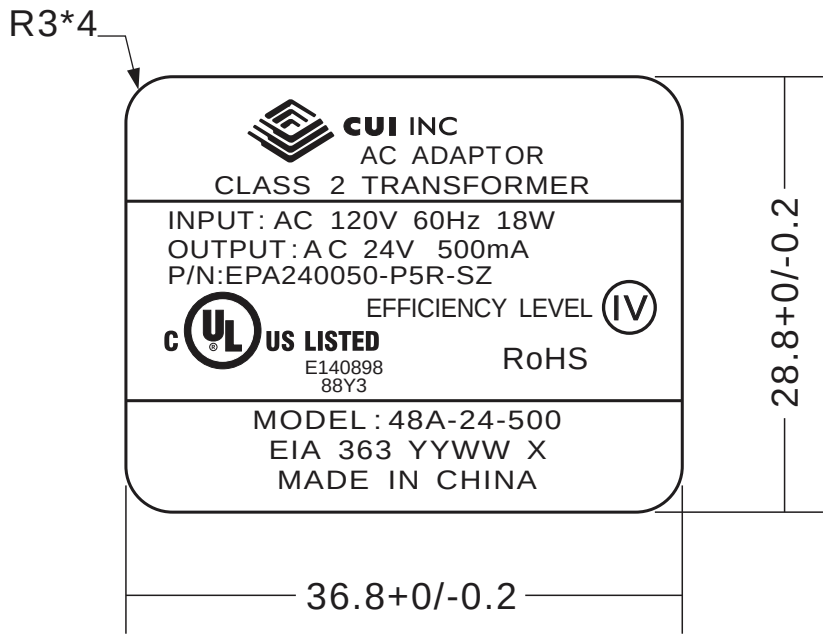

material: pvc polyester
color: black on silver base

remarks: YYWW X
YY=production year
WW=production week
X=production location

PART NUMBER: EPA240050-P5R-SZ **DESCRIPTION:** linear power supply

CIRCUIT DIAGRAM

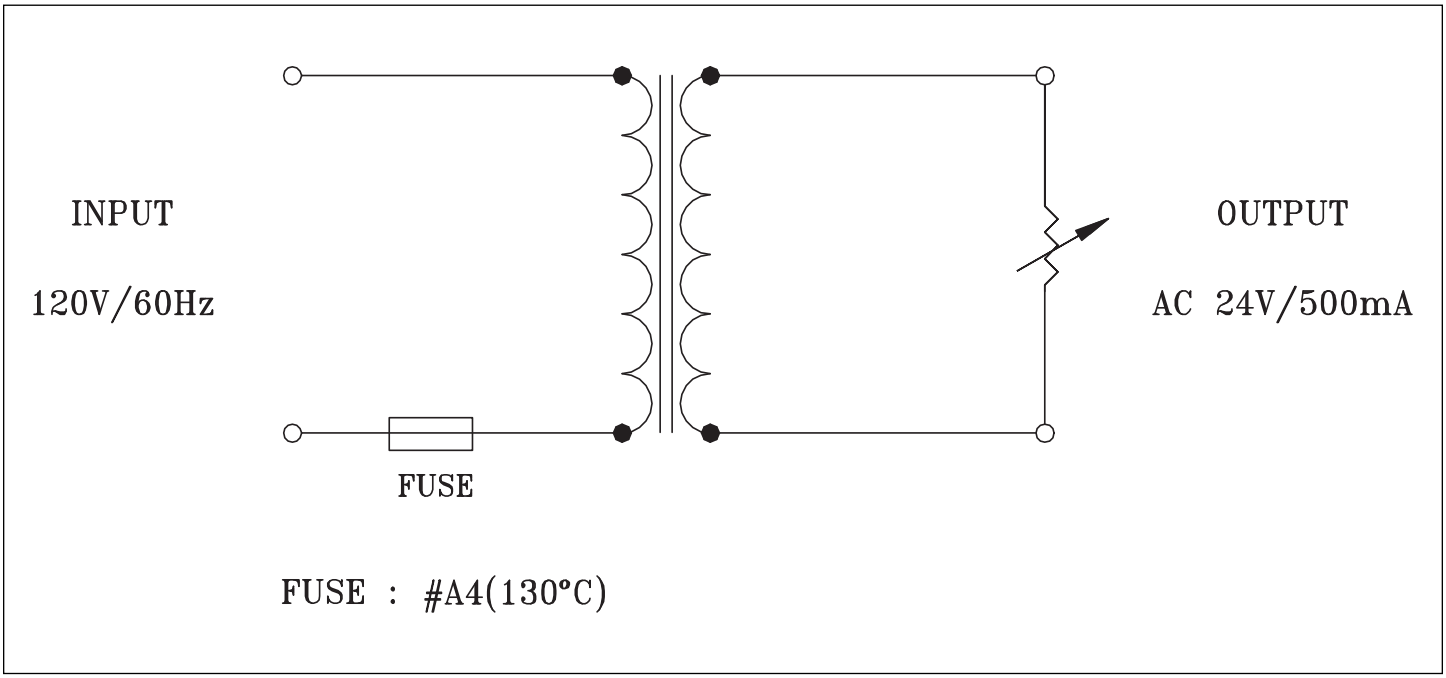

TEST CIRCUIT

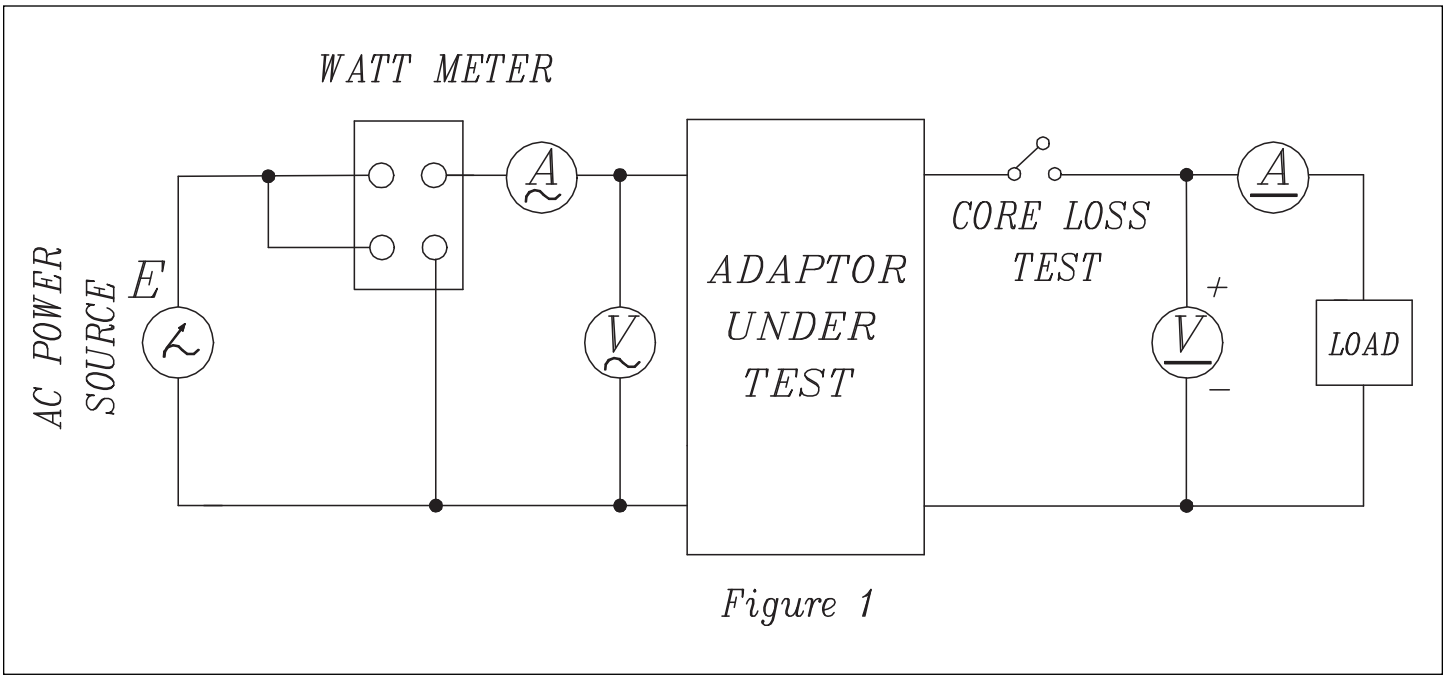

Figure 1

PART NUMBER: EPA240050-P5R-SZ **DESCRIPTION:** linear power supply

MECHANICAL DRAWING

tolerance	±1mm

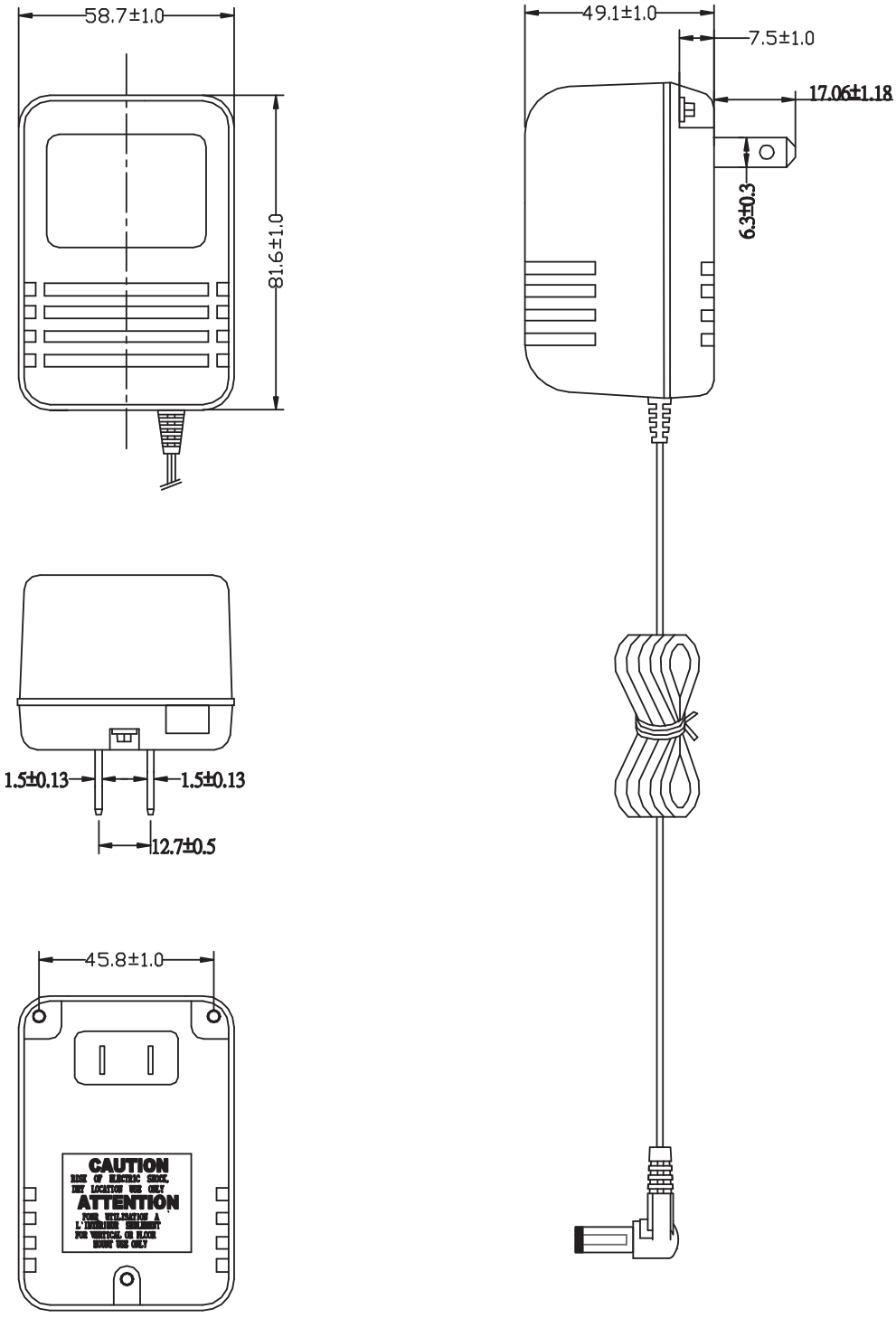

PART NUMBER: EPA240050-P5R-SZ **DESCRIPTION:** linear power supply

DC CORD

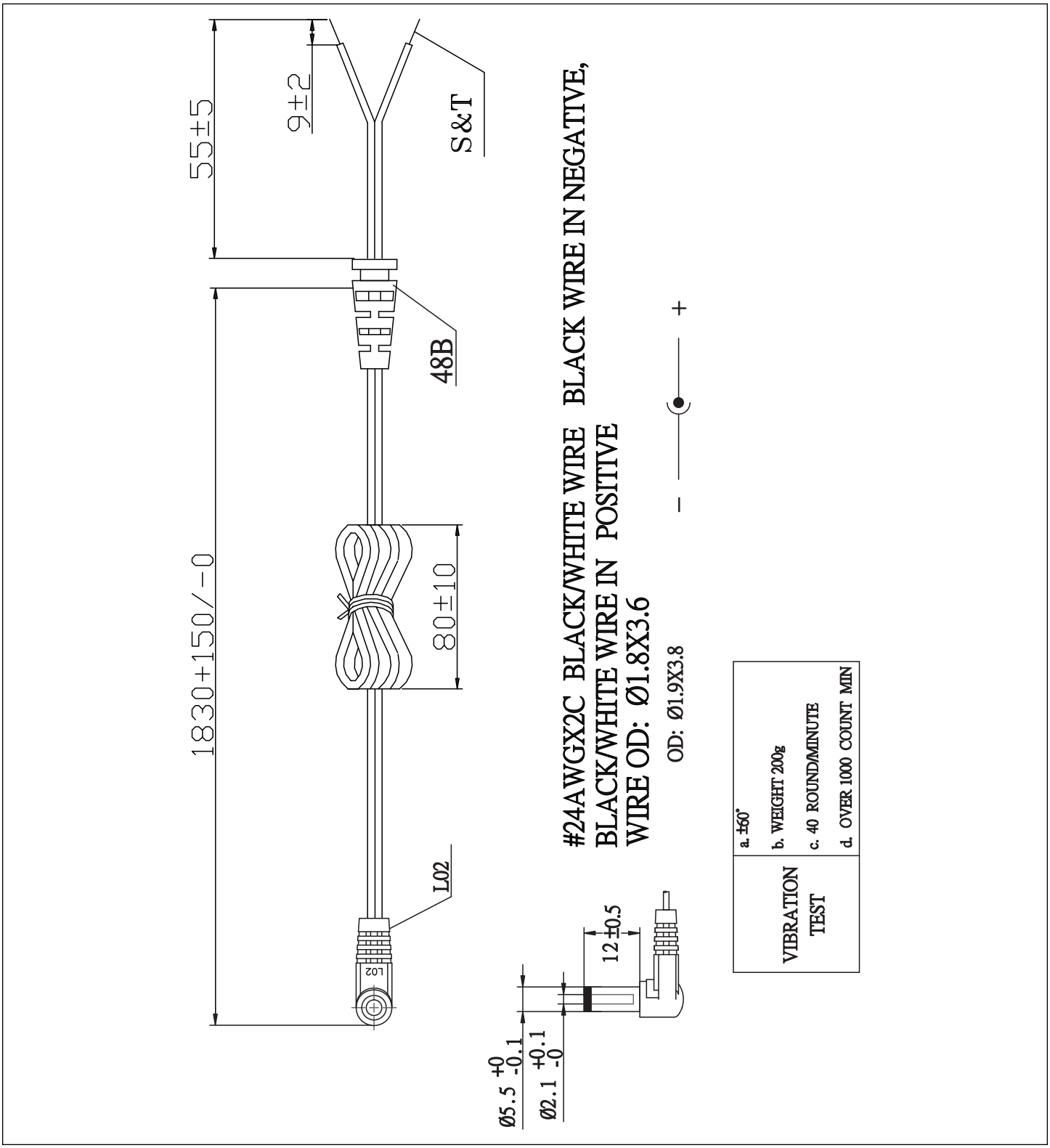

PART NUMBER: EPA240050-P5R-SZ **DESCRIPTION:** linear power supply

INDIVIDUAL PACKAGING

tolerance: ±1

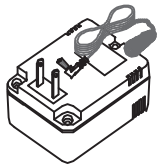

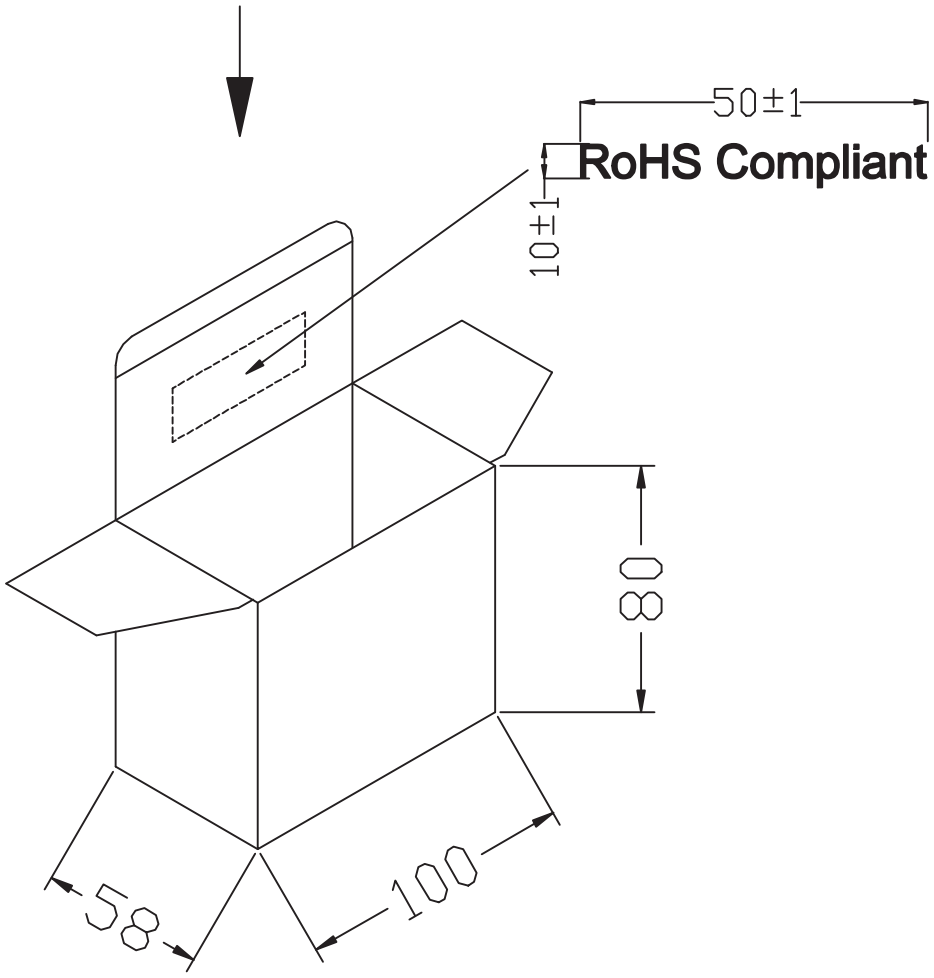

PART NUMBER: EPA240050-P5R-SZ **DESCRIPTION:** linear power supply

PACKAGING

tolerance: +7/-0

OUTSIDE CARTON:A=B(6mm)
INSIDE CARTON:A-B(3mm)
CARTON SIZE: 430x223x269mm
Q'TY: 40pcs(10X4X1)
N.W:16.8 KGS
G.W:17.8 KGS
N.W:18.8 KGS

