14 Pin DIP Triple TTL Compatible Active Delay Lines

DELAY TIME ±5% or ±2 nS†	PART NUMBER	DELAY TIME ±5% or ±2 nS†	PART NUMBER	DELAY TIME ±5% or ±2 nS†	PART NUMBER
5	EP9206-005	19	EP9206-019	65	EP9206-065
6	EP9206-006	20	EP9206-020	70	EP9206-070
7	EP9206-007	21	EP9206-021	75	EP9206-075
8	EP9206-008	22	EP9206-022	80	EP9206-080
9	EP9206-009	23	EP9206-023	85	EP9206-085
10	EP9206-010	24	EP9206-024	90	EP9206-090
11	EP9206-011	25	EP9206-025	95	EP9206-095
12	EP9206-012	30	EP9206-030	100	EP9206-100
13	EP9206-013	35	EP9206-035	125	EP9206-125
14	EP9206-014	40	EP9206-040	150	EP9206-150
15	EP9206-015	45	EP9206-045	175	EP9206-175
16	EP9206-016	50	EP9206-050	200	EP9206-200
17	EP9206-017	55	EP9206-055	225	EP9206-225
18	EP9206-018	60	EP9206-060	250	EP9206-250

†Whichever is greater. Delay Times referenced from input to leading edges at 25°C, 5.0V, with no load.

DC Electrical Characteristics

	Parameter	Test Conditions	Min	Max	Unit
V_{OH}	High-Level Output Voltage	V_{CC} = min. V_{IL} = max. I_{OH} = max	2.7		V
V_{OL}	Low-Level Output Voltage	V_{CC} = min. V_{IH} = min. I_{OL} = max		0.5	V
V_{IK}	Input Clamp Voltage	V_{CC} = min. I_I = II_K		-1.2V	V
I_{IH}	High-Level Input Current	V_{CC} = max. V_{IN} = 2.7V		50	µA
		V_{CC} = max. V_{IN} = 5.25V		1.0	mA
I_{IL}	Low-Level Input Current	V_{CC} = max. V_{IN} = 0.5V		-2	mA
I_{OS}	Short Circuit Output Current	V_{CC} = max. V_{OUT} = 0. (One output at a time)	-40	-100	mA
I_{CCH}	High-Level Supply Current	V_{CC} = max. V_{IN} = OPEN		115	mA
I_{CCL}	Low-Level Supply Current	V_{CC} = max. V_{IN} = 0		115	mA
T_{RO}	Output Rise Time	Td ≤ 500 nS (0.75 to 2.4 Volts)		4	nS
N_H	Fanout High-Level Output	V_{CC} = max. V_{OH} = 2.7V		20 TTL LOAD	
N_L	Fanout Low-Level Output	V_{CC} = max. V_{OL} = 0.5V		10 TTL LOAD	

Schematic

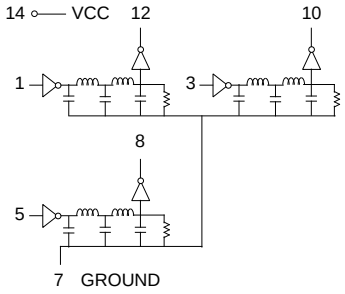

Recommended Operating Conditions

		Min	Max	Unit
V_{CC}	Supply Voltage	4.75	5.25	V
V_{IH}	High-Level Input Voltage	2.0		V
V_{IL}	Low-Level Input Voltage		0.8	V
I_{IK}	Input Clamp Current		-18	mA
I_{OH}	High-Level Output Current		-1.0	mA
I_{OL}	Low-Level Output Current		20	mA
P_W*	Pulse Width of Total Delay	40		%
d*	Duty Cycle		40	%
T_A	Operating Free-Air Temperature	0	+70	°C

**These two values are inter-dependent.*

Input Pulse Test Conditions @ 25° C

			Unit
E_{IN}	Pulse Input Voltage	3.2	Volts
P_W	Pulse Width % of Total Delay	110	%
T_{RI}	Pulse Rise Time (0.75 - 2.4 Volts)	2.0	nS
P_{RR}	Pulse Repetition Rate @ Td ≤ 200 nS	1.0	MHz
	Pulse Repetition Rate @ Td > 200 nS	100	KHz
V_{CC}	Supply Voltage	5.0	Volts

Package Dimensions

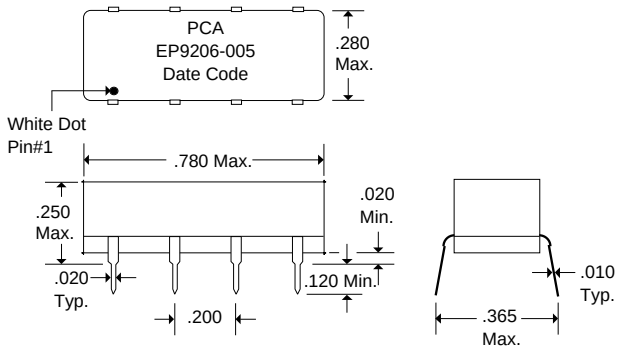

DSD9206 Rev. A 2/5/96

Unless Otherwise Noted Dimensions in Inches
Tolerances:
Fractional = ± 1/32
.XX = ± .030 .XXX = ± .010

QAF-CSO1 Rev. B 8/25/94

PCA ELECTRONICS INC.
16799 SCHOENBORN ST.
NORTH HILLS, CA 91343
TEL: (818) 892-0761
FAX: (818) 894-5791