

Stratix II Device Handbook, Volume 1



101 Innovation Drive
San Jose, CA 95134
www.altera.com

SII5V1-4.5

Copyright © 2011 Altera Corporation. All rights reserved. Altera, The Programmable Solutions Company, the stylized Altera logo, specific device designations, and all other words and logos that are identified as trademarks and/or service marks are, unless noted otherwise, the trademarks and service marks of Altera Corporation in the U.S. and other countries. All other product or service names are the property of their respective holders. Altera products are protected under numerous U.S. and foreign patents and pending applications, maskwork rights, and copyrights. Altera warrants performance of its semiconductor products to current specifications in accordance with Altera's standard warranty, but reserves the right to make changes to any products and services at any time without notice. Altera assumes no responsibility or liability arising out of the application or use of any information, product, or service described herein except as expressly agreed to in writing by Altera Corporation. Altera customers are advised to obtain the latest version of device specifications before relying on any published information and before placing orders for products or services.

Altera Lead-Free

I.S. EN ISO 9001

Contents

Chapter Revision Dates vii

About this Handbook i
How to Contact Altera i
Typographic Conventions i

Section I. Stratix II Device Family Data Sheet
Revision History ..... Section I–1

Chapter 1. Introduction
Introduction 1–1
Features 1–1
Document Revision History 1–6

Chapter 2. Stratix II Architecture
Functional Description 2–1
Logic Array Blocks 2–3
LAB Interconnects 2–4
LAB Control Signals 2–5
Adaptive Logic Modules 2–6
ALM Operating Modes 2–9
Register Chain 2–20
Clear & Preset Logic Control 2–22
MultiTrack Interconnect 2–22
TriMatrix Memory 2–28
Memory Block Size 2–29
Digital Signal Processing Block 2–40
Modes of Operation 2–44
DSP Block Interface 2–44
PLLs & Clock Networks 2–48
Global & Hierarchical Clocking 2–48
Enhanced & Fast PLLs 2–57
Enhanced PLLs 2–68
Fast PLLs 2–69
I/O Structure 2–69
Double Data Rate I/O Pins 2–77
External RAM Interfacing 2–81
Programmable Drive Strength 2–83

Open-Drain Output 2–84
Bus Hold 2–84
Programmable Pull-Up Resistor 2–85
Advanced I/O Standard Support 2–85
On-Chip Termination 2–89
MultiVolt I/O Interface 2–93
High-Speed Differential I/O with DPA Support 2–96
Dedicated Circuitry with DPA Support 2–100
Fast PLL & Channel Layout 2–102
Document Revision History 2–104

Chapter 3. Configuration & Testing

IEEE Std. 1149.1 JTAG Boundary-Scan Support 3–1
SignalTap II Embedded Logic Analyzer 3–4
Configuration 3–4
Operating Modes 3–5
Configuration Schemes 3–7
Configuring Stratix II FPGAs with JRunner 3–10
Programming Serial Configuration Devices with SRunner 3–10
Configuring Stratix II FPGAs with the MicroBlaster Driver 3–11
PLL Reconfiguration 3–11
Temperature Sensing Diode (TSD) 3–11
Automated Single Event Upset (SEU) Detection 3–13
Custom-Built Circuitry 3–14
Software Interface 3–14
Document Revision History 3–14

Chapter 4. Hot Socketing & Power-On Reset

Stratix II
Hot-Socketing Specifications 4–1
Devices Can Be Driven Before Power-Up 4–2
I/O Pins Remain Tri-Stated During Power-Up 4–2
Signal Pins Do Not Drive the V_{CCIO}, V_{CCINT} or V_{CCPD} Power Supplies 4–2
Hot Socketing Feature Implementation in Stratix II Devices 4–3
Power-On Reset Circuitry 4–5
Document Revision History 4–6

Chapter 5. DC & Switching Characteristics

Operating Conditions 5–1
Absolute Maximum Ratings 5–1
Recommended Operating Conditions 5–2
DC Electrical Characteristics 5–3
I/O Standard Specifications 5–4
Bus Hold Specifications 5–17
On-Chip Termination Specifications 5–17
Pin Capacitance 5–19
Power Consumption 5–20

Timing Model 5–20
Preliminary & Final Timing 5–20
I/O Timing Measurement Methodology 5–21
Performance 5–27
Internal Timing Parameters 5–34
Stratix II Clock Timing Parameters 5–41
Clock Network Skew Adders 5–50
IOE Programmable Delay 5–51
Default Capacitive Loading of Different I/O Standards 5–52
I/O Delays 5–54
Maximum Input & Output Clock Toggle Rate 5–66
Duty Cycle Distortion 5–77
DCD Measurement Techniques 5–78
High-Speed I/O Specifications 5–87
PLL Timing Specifications 5–91
External Memory Interface Specifications 5–94
JTAG Timing Specifications 5–96
Document Revision History 5–97

Chapter 6. Reference & Ordering Information

Software 6–1
Device Pin-Outs 6–1
Ordering Information 6–1
Document Revision History 6–2

Chapter Revision Dates

The chapters in this book, *Stratix II Device Handbook, Volume 1*, were revised on the following dates. Where chapters or groups of chapters are available separately, part numbers are listed.

Chapter 1. Introduction
Revised: *May 2007*
Part number: *SII51001-4.2*

Chapter 2. Stratix II Architecture
Revised: *May 2007*
Part number: *SII51002-4.3*

Chapter 3. Configuration & Testing
Revised: *May 2007*
Part number: *SII51003-4.2*

Chapter 4. Hot Socketing & Power-On Reset
Revised: *May 2007*
Part number: *SII51004-3.2*

Chapter 5. DC & Switching Characteristics
Revised: *April 2011*
Part number: *SII51005-4.5*

Chapter 6. Reference & Ordering Information
Revised: *April 2011*
Part number: *SII51006-2.2*

About this Handbook

This handbook provides comprehensive information about the Altera® Stratix® II family of devices.

How to Contact Altera

For the most up-to-date information about Altera products, refer to the following table.

Contact *(1)*	Contact Method	Address
Technical support	Website	www.altera.com/support
Technical training	Website	www.altera.com/training
	Email	custrain@altera.com
Product literature	Email	www.altera.com/literature
Altera literature services	Website	literature@altera.com
Non-technical support (General)	Email	nacomp@altera.com
(Software Licensing)	Email	authorization@altera.com

Note to table:
(1) You can also contact your local Altera sales office or sales representative.

Typographic Conventions

This document uses the typographic conventions shown below.

Visual Cue	Meaning
Bold Type with Initial Capital Letters	Command names, dialog box titles, checkbox options, and dialog box options are shown in bold, initial capital letters. Example: **Save As** dialog box.
bold type	External timing parameters, directory names, project names, disk drive names, filenames, filename extensions, and software utility names are shown in bold type. Examples: $\mathbf{f_{MAX}}$, **\qdesigns** directory, **d:** drive, **chiptrip.gdf** file.
Italic Type with Initial Capital Letters	Document titles are shown in italic type with initial capital letters. Example: *AN 75: High-Speed Board Design.*

Visual Cue	Meaning
Italic type	Internal timing parameters and variables are shown in italic type. Examples: t_{PIA}, $n + 1$. Variable names are enclosed in angle brackets (< >) and shown in italic type. Example: *<file name>*, *<project name>*.**pof** file.
Initial Capital Letters	Keyboard keys and menu names are shown with initial capital letters. Examples: Delete key, the Options menu.
"Subheading Title"	References to sections within a document and titles of on-line help topics are shown in quotation marks. Example: "Typographic Conventions."
`Courier type`	Signal and port names are shown in lowercase Courier type. Examples: `data1`, `tdi`, `input.` Active-low signals are denoted by suffix `n`, e.g., `resetn`. Anything that must be typed exactly as it appears is shown in Courier type. For example: `c:\qdesigns\tutorial\chiptrip.gdf`. Also, sections of an actual file, such as a Report File, references to parts of files (e.g., the AHDL keyword `SUBDESIGN`), as well as logic function names (e.g., `TRI`) are shown in Courier.
1., 2., 3., and a., b., c., etc.	Numbered steps are used in a list of items when the sequence of the items is important, such as the steps listed in a procedure.
■ ● •	Bullets are used in a list of items when the sequence of the items is not important.
✓	The checkmark indicates a procedure that consists of one step only.
☞	The hand points to information that requires special attention.
CAUTION	The caution indicates required information that needs special consideration and understanding and should be read prior to starting or continuing with the procedure or process.
WARNING	The warning indicates information that should be read prior to starting or continuing the procedure or processes
↵	The angled arrow indicates you should press the Enter key.
	The feet direct you to more information on a particular topic.

Section I. Stratix II Device Family Data Sheet

This section provides the data sheet specifications for Stratix® II devices. This section contains feature definitions of the internal architecture, configuration and JTAG boundary-scan testing information, DC operating conditions, AC timing parameters, a reference to power consumption, and ordering information for Stratix II devices.

This section contains the following chapters:

- Chapter 1, Introduction
- Chapter 2, Stratix II Architecture
- Chapter 3, Configuration & Testing
- Chapter 4, Hot Socketing & Power-On Reset
- Chapter 5, DC & Switching Characteristics
- Chapter 6, Reference & Ordering Information

Revision History

Refer to each chapter for its own specific revision history. For information on when each chapter was updated, refer to the Chapter Revision Dates section, which appears in the full handbook.

1. Introduction

SII51001-4.2

Introduction

The Stratix® II FPGA family is based on a 1.2-V, 90-nm, all-layer copper SRAM process and features a new logic structure that maximizes performance, and enables device densities approaching 180,000 equivalent logic elements (LEs). Stratix II devices offer up to 9 Mbits of on-chip, TriMatrix™ memory for demanding, memory intensive applications and has up to 96 DSP blocks with up to 384 (18-bit × 18-bit) multipliers for efficient implementation of high performance filters and other DSP functions. Various high-speed external memory interfaces are supported, including double data rate (DDR) SDRAM and DDR2 SDRAM, RLDRAM II, quad data rate (QDR) II SRAM, and single data rate (SDR) SDRAM. Stratix II devices support various I/O standards along with support for 1-gigabit per second (Gbps) source synchronous signaling with DPA circuitry. Stratix II devices offer a complete clock management solution with internal clock frequency of up to 550 MHz and up to 12 phase-locked loops (PLLs). Stratix II devices are also the industry's first FPGAs with the ability to decrypt a configuration bitstream using the Advanced Encryption Standard (AES) algorithm to protect designs.

Features

The Stratix II family offers the following features:

- 15,600 to 179,400 equivalent LEs; see Table 1–1
- New and innovative adaptive logic module (ALM), the basic building block of the Stratix II architecture, maximizes performance and resource usage efficiency
- Up to 9,383,040 RAM bits (1,172,880 bytes) available without reducing logic resources
- TriMatrix memory consisting of three RAM block sizes to implement true dual-port memory and first-in first-out (FIFO) buffers
- High-speed DSP blocks provide dedicated implementation of multipliers (at up to 450 MHz), multiply-accumulate functions, and finite impulse response (FIR) filters
- Up to 16 global clocks with 24 clocking resources per device region
- Clock control blocks support dynamic clock network enable/disable, which allows clock networks to power down to reduce power consumption in user mode
- Up to 12 PLLs (four enhanced PLLs and eight fast PLLs) per device provide spread spectrum, programmable bandwidth, clock switch-over, real-time PLL reconfiguration, and advanced multiplication and phase shifting

- Support for numerous single-ended and differential I/O standards
- High-speed differential I/O support with DPA circuitry for 1-Gbps performance
- Support for high-speed networking and communications bus standards including Parallel RapidIO, SPI-4 Phase 2 (POS-PHY Level 4), HyperTransport™ technology, and SFI-4
- Support for high-speed external memory, including DDR and DDR2 SDRAM, RLDRAM II, QDR II SRAM, and SDR SDRAM
- Support for multiple intellectual property megafunctions from Altera MegaCore® functions and Altera Megafunction Partners Program (AMPP℠) megafunctions
- Support for design security using configuration bitstream encryption
- Support for remote configuration updates

Table 1–1. Stratix II FPGA Family Features

Feature	EP2S15	EP2S30	EP2S60	EP2S90	EP2S130	EP2S180
ALMs	6,240	13,552	24,176	36,384	53,016	71,760
Adaptive look-up tables (ALUTs) *(1)*	12,480	27,104	48,352	72,768	106,032	143,520
Equivalent LEs *(2)*	15,600	33,880	60,440	90,960	132,540	179,400
M512 RAM blocks	104	202	329	488	699	930
M4K RAM blocks	78	144	255	408	609	768
M-RAM blocks	0	1	2	4	6	9
Total RAM bits	419,328	1,369,728	2,544,192	4,520,488	6,747,840	9,383,040
DSP blocks	12	16	36	48	63	96
18-bit × 18-bit multipliers *(3)*	48	64	144	192	252	384
Enhanced PLLs	2	2	4	4	4	4
Fast PLLs	4	4	8	8	8	8
Maximum user I/O pins	366	500	718	902	1,126	1,170

Notes to Table 1–1:

(1) One ALM contains two ALUTs. The ALUT is the cell used in the Quartus® II software for logic synthesis.

(2) This is the equivalent number of LEs in a Stratix device (four-input LUT-based architecture).

(3) These multipliers are implemented using the DSP blocks.

Stratix II devices are available in space-saving FineLine BGA® packages (see Tables 1–2 and 1–3).

Table 1–2. Stratix II Package Options & I/O Pin Counts *Notes (1), (2)*

Device	484-Pin FineLine BGA	484-Pin Hybrid FineLine BGA	672-Pin FineLine BGA	780-Pin FineLine BGA	1,020-Pin FineLine BGA	1,508-Pin FineLine BGA
EP2S15	342		366			
EP2S30	342		500			
EP2S60 *(3)*	334		492		718	
EP2S90 *(3)*		308		534	758	902
EP2S130 *(3)*				534	742	1,126
EP2S180 *(3)*					742	1,170

Notes to Table 1–2:

(1) All I/O pin counts include eight dedicated clock input pins (`clk1p`, `clk1n`, `clk3p`, `clk3n`, `clk9p`, `clk9n`, `clk11p`, and `clk11n`) that can be used for data inputs.

(2) The Quartus II software I/O pin counts include one additional pin, `PLL_ENA`, which is not available as general-purpose I/O pins. The `PLL_ENA` pin can only be used to enable the PLLs within the device.

(3) The I/O pin counts for the EP2S60, EP2S90, EP2S130, and EP2S180 devices in the 1020-pin and 1508-pin packages include eight dedicated fast PLL clock inputs (`FPLL7CLKp/n`, `FPLL8CLKp/n`, `FPLL9CLKp/n`, and `FPLL10CLKp/n`) that can be used for data inputs.

Table 1–3. Stratix II FineLine BGA Package Sizes

Dimension	484 Pin	484-Pin Hybrid	672 Pin	780 Pin	1,020 Pin	1,508 Pin
Pitch (mm)	1.00	1.00	1.00	1.00	1.00	1.00
Area (mm2)	529	729	729	841	1,089	1,600
Length × width (mm × mm)	23 × 23	27 × 27	27 × 27	29 × 29	33 × 33	40 × 40

All Stratix II devices support vertical migration within the same package (for example, you can migrate between the EP2S15, EP2S30, and EP2S60 devices in the 672-pin FineLine BGA package). Vertical migration means that you can migrate to devices whose dedicated pins, configuration pins, and power pins are the same for a given package across device densities.

To ensure that a board layout supports migratable densities within one package offering, enable the applicable vertical migration path within the Quartus II software (Assignments menu > Device > Migration Devices).

After compilation, check the information messages for a full list of I/O, DQ, LVDS, and other pins that are not available because of the selected migration path.

Table 1–4 lists the Stratix II device package offerings and shows the total number of non-migratable user I/O pins when migrating from one density device to a larger density device. Additional I/O pins may not be migratable if migrating from the larger device to the smaller density device.



When moving from one density to a larger density, the larger density device may have fewer user I/O pins. The larger device requires more power and ground pins to support the additional logic within the device. Use the Quartus II Pin Planner to determine which user I/O pins are migratable between the two devices.

Table 1–4. Total Number of Non-Migratable I/O Pins for Stratix II Vertical Migration Paths

Vertical Migration Path	484-Pin FineLine BGA	672-Pin FineLine BGA	780-Pin FineLine BGA	1020-Pin FineLine BGA	1508-Pin FineLine BGA
EP2S15 to EP2S30	0 *(1)*	0			
EP2S15 to EP2S60	8 *(1)*	0			
EP2S30 to EP2S60	8 *(1)*	8			
EP2S60 to EP2S90				0	
EP2S60 to EP2S130				0	
EP2S60 to EP2S180				0	
EP2S90 to EP2S130			0 *(1)*	16	17
EP2S90 to EP2S180				16	0
EP2S130 to EP2S180				0	0

Note to Table 1–4:

(1) Some of the DQ/DQS pins are not migratable. Refer to the Quartus II software information messages for more detailed information.



To determine if your user I/O assignments are correct, run the I/O Assignment Analysis command in the Quartus II software (Processing > Start > Start I/O Assignment Analysis).



Refer to the *I/O Management* chapter in volume 2 of the *Quartus II Handbook* for more information on pin migration.

Stratix II devices are available in up to three speed grades, -3, -4, and -5, with -3 being the fastest. Table 1–5 shows Stratix II device speed-grade offerings.

Table 1–5. Stratix II Device Speed Grades

Device	Temperature Grade	484-Pin FineLine BGA	484-Pin Hybrid FineLine BGA	672-Pin FineLine BGA	780-Pin FineLine BGA	1,020-Pin FineLine BGA	1,508-Pin FineLine BGA
EP2S15	Commercial	-3, -4, -5		-3, -4, -5			
	Industrial	-4		-4			
EP2S30	Commercial	-3, -4, -5		-3, -4, -5			
	Industrial	-4		-4			
EP2S60	Commercial	-3, -4, -5		-3, -4, -5		-3, -4, -5	
	Industrial	-4		-4		-4	
EP2S90	Commercial		-4, -5		-4, -5	-3, -4, -5	-3, -4, -5
	Industrial					-4	-4
EP2S130	Commercial				-4, -5	-3, -4, -5	-3, -4, -5
	Industrial					-4	-4
EP2S180	Commercial					-3, -4, -5	-3, -4, -5
	Industrial					-4	-4

Document Revision History

Table 1–6 shows the revision history for this chapter.

Table 1–6. Document Revision History

Date and Document Version	Changes Made	Summary of Changes
May 2007, v4.2	Moved Document Revision History to the end of the chapter.	—
April 2006, v4.1	• Updated "Features" section. • Removed Note 4 from Table 1–2. • Updated Table 1–4.	—
December 2005, v4.0	• Updated Tables 1–2, 1–4, and 1–5. • Updated Figure 2–43.	—
July 2005, v3.1	• Added vertical migration information, including Table 1–4. • Updated Table 1–5.	—
May 2005, v3.0	• Updated "Features" section. • Updated Table 1–2.	—
March 2005, v2.1	Updated "Introduction" and "Features" sections.	—
January 2005, v2.0	Added note to Table 1–2.	—
October 2004, v1.2	Updated Tables 1–2, 1–3, and 1–5.	—
July 2004, v1.1	• Updated Tables 1–1 and 1–2. • Updated "Features" section.	—
February 2004, v1.0	Added document to the Stratix II Device Handbook.	—

2. Stratix II Architecture

SII51002-4.3

Functional Description

Stratix® II devices contain a two-dimensional row- and column-based architecture to implement custom logic. A series of column and row interconnects of varying length and speed provides signal interconnects between logic array blocks (LABs), memory block structures (M512 RAM, M4K RAM, and M-RAM blocks), and digital signal processing (DSP) blocks.

Each LAB consists of eight adaptive logic modules (ALMs). An ALM is the Stratix II device family's basic building block of logic providing efficient implementation of user logic functions. LABs are grouped into rows and columns across the device.

M512 RAM blocks are simple dual-port memory blocks with 512 bits plus parity (576 bits). These blocks provide dedicated simple dual-port or single-port memory up to 18-bits wide at up to 500 MHz. M512 blocks are grouped into columns across the device in between certain LABs.

M4K RAM blocks are true dual-port memory blocks with 4K bits plus parity (4,608 bits). These blocks provide dedicated true dual-port, simple dual-port, or single-port memory up to 36-bits wide at up to 550 MHz. These blocks are grouped into columns across the device in between certain LABs.

M-RAM blocks are true dual-port memory blocks with 512K bits plus parity (589,824 bits). These blocks provide dedicated true dual-port, simple dual-port, or single-port memory up to 144-bits wide at up to 420 MHz. Several M-RAM blocks are located individually in the device's logic array.

DSP blocks can implement up to either eight full-precision 9 × 9-bit multipliers, four full-precision 18 × 18-bit multipliers, or one full-precision 36 × 36-bit multiplier with add or subtract features. The DSP blocks support Q1.15 format rounding and saturation in the multiplier and accumulator stages. These blocks also contain shift registers for digital signal processing applications, including finite impulse response (FIR) and infinite impulse response (IIR) filters. DSP blocks are grouped into columns across the device and operate at up to 450 MHz.

Each Stratix II device I/O pin is fed by an I/O element (IOE) located at the end of LAB rows and columns around the periphery of the device. I/O pins support numerous single-ended and differential I/O standards. Each IOE contains a bidirectional I/O buffer and six registers for registering input, output, and output-enable signals. When used with dedicated clocks, these registers provide exceptional performance and interface support with external memory devices such as DDR and DDR2 SDRAM, RLDRAM II, and QDR II SRAM devices. High-speed serial interface channels with dynamic phase alignment (DPA) support data transfer at up to 1 Gbps using LVDS or HyperTransport™ technology I/O standards.

Figure 2–1 shows an overview of the Stratix II device.

Figure 2–1. Stratix II Block Diagram

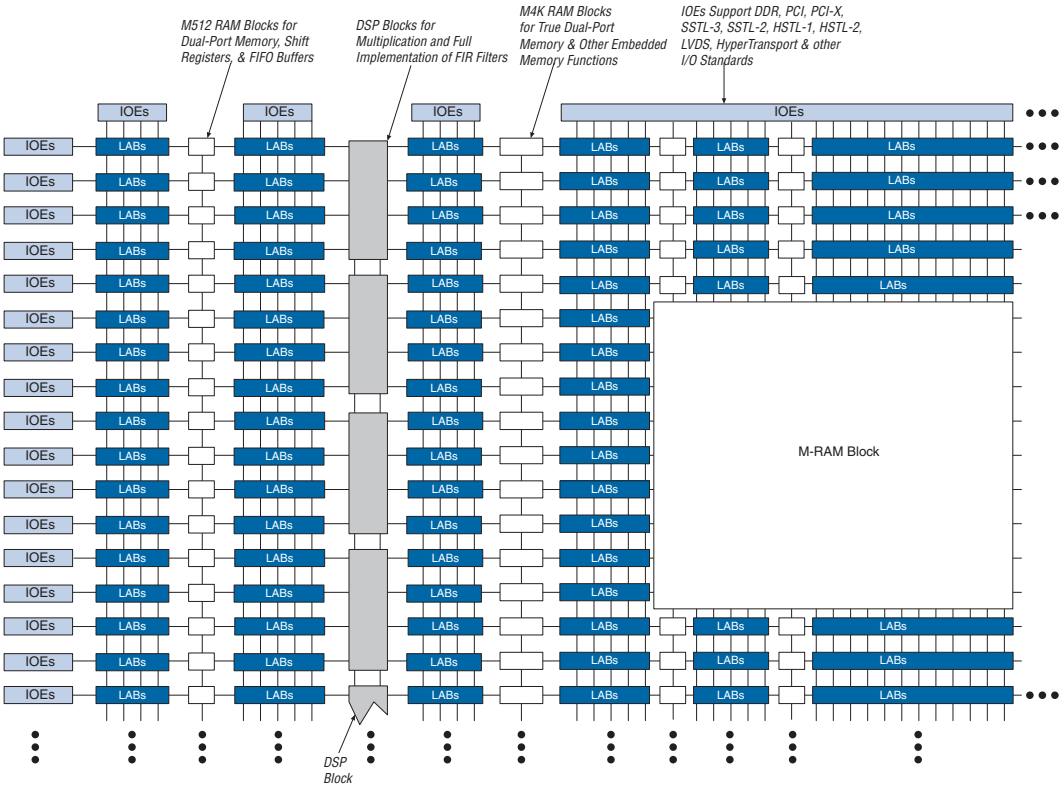

The number of M512 RAM, M4K RAM, and DSP blocks varies by device along with row and column numbers and M-RAM blocks. Table 2–1 lists the resources available in Stratix II devices.

Table 2–1. Stratix II Device Resources

Device	M512 RAM Columns/Blocks	M4K RAM Columns/Blocks	M-RAM Blocks	DSP Block Columns/Blocks	LAB Columns	LAB Rows
EP2S15	4 / 104	3 / 78	0	2 / 12	30	26
EP2S30	6 / 202	4 / 144	1	2 / 16	49	36
EP2S60	7 / 329	5 / 255	2	3 / 36	62	51
EP2S90	8 / 488	6 / 408	4	3 / 48	71	68
EP2S130	9 / 699	7 / 609	6	3 / 63	81	87
EP2S180	11 / 930	8 / 768	9	4 / 96	100	96

Logic Array Blocks

Each LAB consists of eight ALMs, carry chains, shared arithmetic chains, LAB control signals, local interconnect, and register chain connection lines. The local interconnect transfers signals between ALMs in the same LAB. Register chain connections transfer the output of an ALM register to the adjacent ALM register in an LAB. The Quartus® II Compiler places associated logic in an LAB or adjacent LABs, allowing the use of local, shared arithmetic chain, and register chain connections for performance and area efficiency. Figure 2–2 shows the Stratix II LAB structure.

Figure 2–2. Stratix II LAB Structure

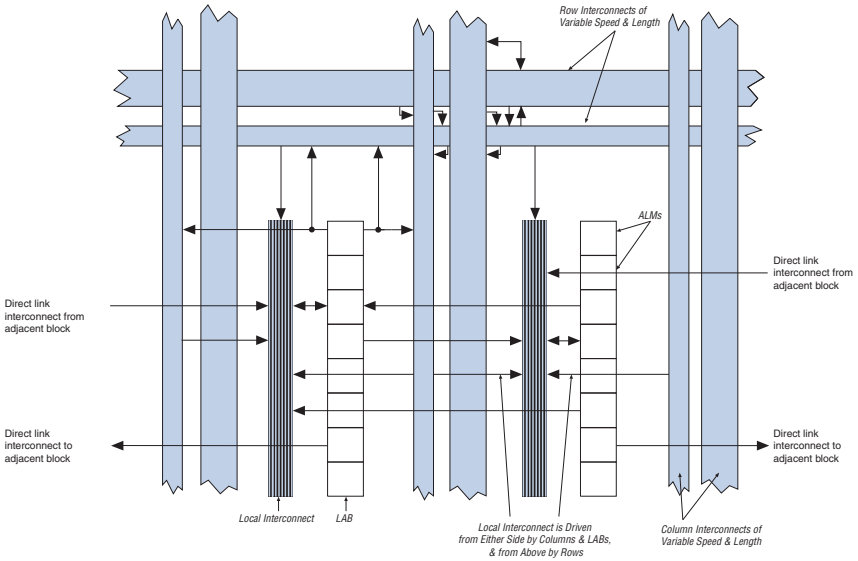

LAB Interconnects

The LAB local interconnect can drive ALMs in the same LAB. It is driven by column and row interconnects and ALM outputs in the same LAB. Neighboring LABs, M512 RAM blocks, M4K RAM blocks, M-RAM blocks, or DSP blocks from the left and right can also drive an LAB's local interconnect through the direct link connection. The direct link connection feature minimizes the use of row and column interconnects, providing higher performance and flexibility. Each ALM can drive 24 ALMs through fast local and direct link interconnects. Figure 2–3 shows the direct link connection.

Figure 2–3. Direct Link Connection

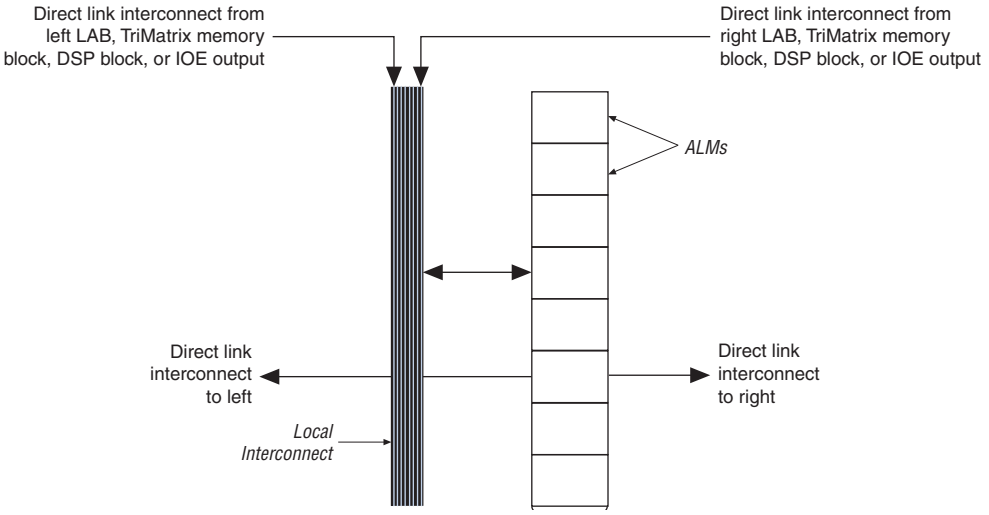

LAB Control Signals

Each LAB contains dedicated logic for driving control signals to its ALMs. The control signals include three clocks, three clock enables, two asynchronous clears, synchronous clear, asynchronous preset/load, and synchronous load control signals. This gives a maximum of 11 control signals at a time. Although synchronous load and clear signals are generally used when implementing counters, they can also be used with other functions.

Each LAB can use three clocks and three clock enable signals. However, there can only be up to two unique clocks per LAB, as shown in the LAB control signal generation circuit in Figure 2–4. Each LAB's clock and clock enable signals are linked. For example, any ALM in a particular LAB using the `labclk1` signal also uses `labclkena1`. If the LAB uses both the rising and falling edges of a clock, it also uses two LAB-wide clock signals. De-asserting the clock enable signal turns off the corresponding LAB-wide clock.

Each LAB can use two asynchronous clear signals and an asynchronous load/preset signal. By default, the Quartus II software uses a `NOT` gate push-back technique to achieve preset. If you disable the `NOT` gate push-up option or assign a given register to power up high using the Quartus II software, the preset is achieved using the asynchronous load

signal with asynchronous load data input tied high. When the asynchronous load/preset signal is used, the `labclkena0` signal is no longer available.

The LAB row clocks `[5..0]` and LAB local interconnect generate the LAB-wide control signals. The MultiTrack™ interconnect's inherent low skew allows clock and control signal distribution in addition to data. Figure 2–4 shows the LAB control signal generation circuit.

Figure 2–4. LAB-Wide Control Signals

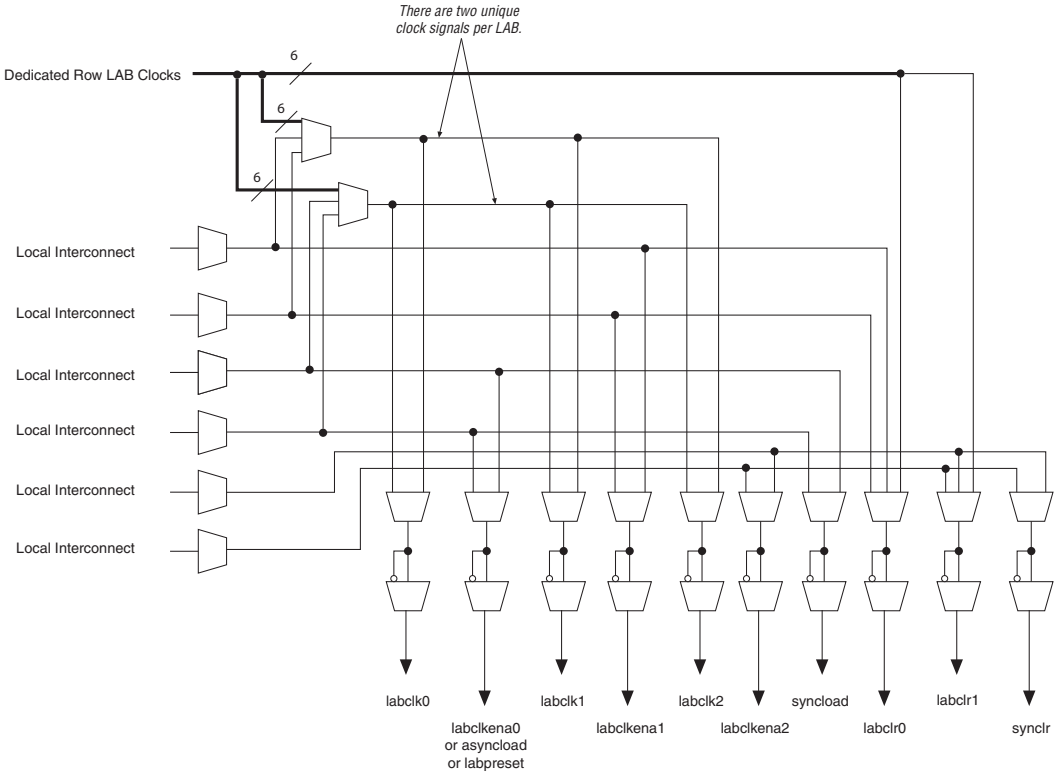

Adaptive Logic Modules

The basic building block of logic in the Stratix II architecture, the adaptive logic module (ALM), provides advanced features with efficient logic utilization. Each ALM contains a variety of look-up table (LUT)-based resources that can be divided between two adaptive LUTs (ALUTs). With up to eight inputs to the two ALUTs, one ALM can implement various combinations of two functions. This adaptability allows the ALM to be

completely backward-compatible with four-input LUT architectures. One ALM can also implement any function of up to six inputs and certain seven-input functions.

In addition to the adaptive LUT-based resources, each ALM contains two programmable registers, two dedicated full adders, a carry chain, a shared arithmetic chain, and a register chain. Through these dedicated resources, the ALM can efficiently implement various arithmetic functions and shift registers. Each ALM drives all types of interconnects: local, row, column, carry chain, shared arithmetic chain, register chain, and direct link interconnects. Figure 2–5 shows a high-level block diagram of the Stratix II ALM while Figure 2–6 shows a detailed view of all the connections in the ALM.

Figure 2–5. High-Level Block Diagram of the Stratix II ALM

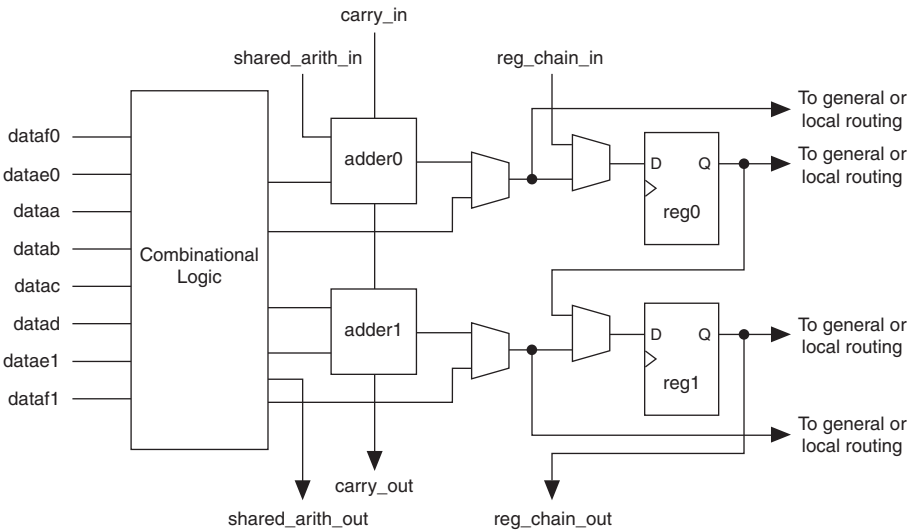

Figure 2–6. Stratix II ALM Details

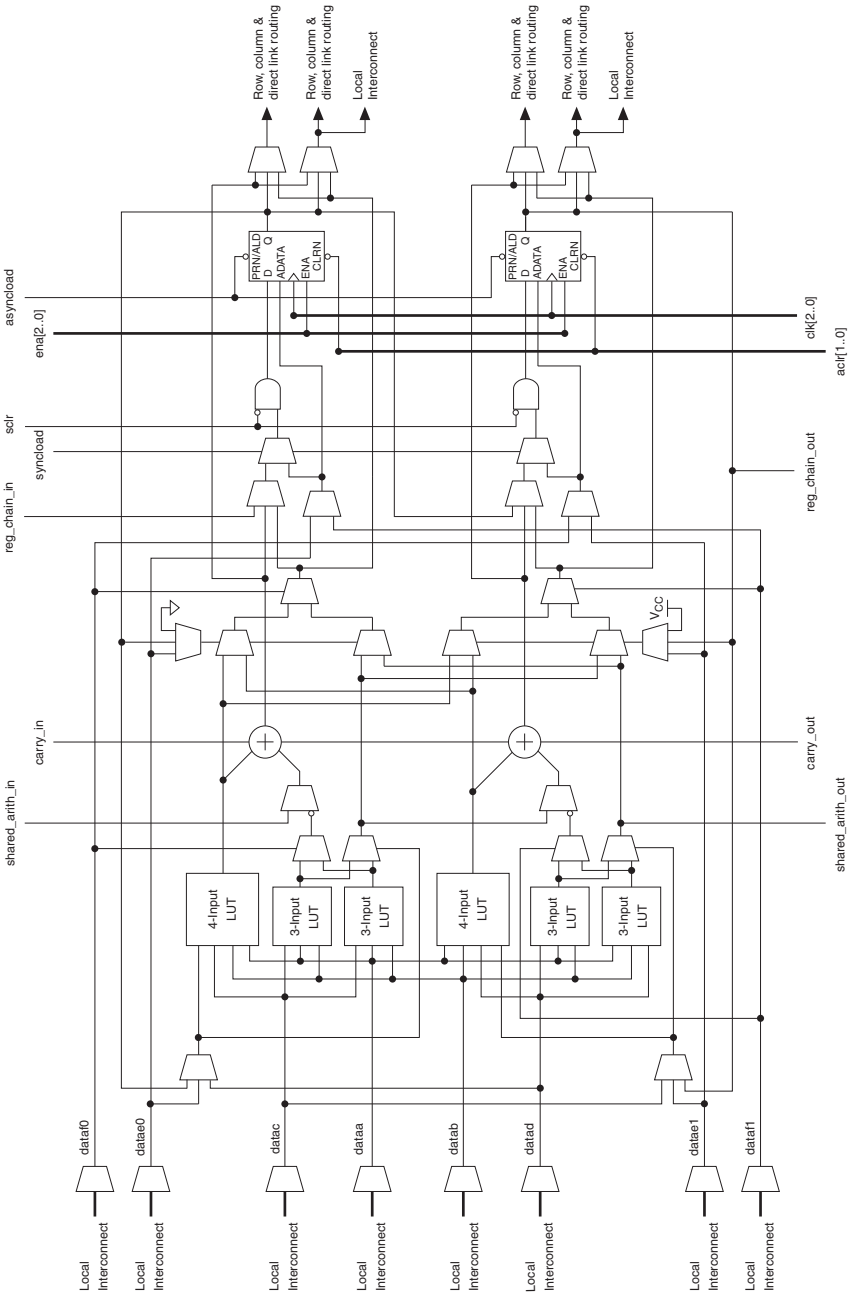

One ALM contains two programmable registers. Each register has data, clock, clock enable, synchronous and asynchronous clear, asynchronous load data, and synchronous and asynchronous load/preset inputs. Global signals, general-purpose I/O pins, or any internal logic can drive the register's clock and clear control signals. Either general-purpose I/O pins or internal logic can drive the clock enable, preset, asynchronous load, and asynchronous load data. The asynchronous load data input comes from the `datae` or `dataf` input of the ALM, which are the same inputs that can be used for register packing. For combinational functions, the register is bypassed and the output of the LUT drives directly to the outputs of the ALM.

Each ALM has two sets of outputs that drive the local, row, and column routing resources. The LUT, adder, or register output can drive these output drivers independently (see Figure 2–6). For each set of output drivers, two ALM outputs can drive column, row, or direct link routing connections, and one of these ALM outputs can also drive local interconnect resources. This allows the LUT or adder to drive one output while the register drives another output. This feature, called register packing, improves device utilization because the device can use the register and the combinational logic for unrelated functions. Another special packing mode allows the register output to feed back into the LUT of the same ALM so that the register is packed with its own fan-out LUT. This provides another mechanism for improved fitting. The ALM can also drive out registered and unregistered versions of the LUT or adder output.



See the *Performance & Logic Efficiency Analysis of Stratix II Devices White Paper* for more information on the efficiencies of the Stratix II ALM and comparisons with previous architectures.

ALM Operating Modes

The Stratix II ALM can operate in one of the following modes:

- Normal mode
- Extended LUT mode
- Arithmetic mode
- Shared arithmetic mode

Each mode uses ALM resources differently. In each mode, eleven available inputs to the ALM--the eight data inputs from the LAB local interconnect; `carry-in` from the previous ALM or LAB; the shared arithmetic chain connection from the previous ALM or LAB; and the register chain connection--are directed to different destinations to implement the desired logic function. LAB-wide signals provide clock, asynchronous clear, asynchronous preset/load, synchronous clear,

synchronous load, and clock enable control for the register. These LAB-wide signals are available in all ALM modes. See the "LAB Control Signals" section for more information on the LAB-wide control signals.

The Quartus II software and supported third-party synthesis tools, in conjunction with parameterized functions such as library of parameterized modules (LPM) functions, automatically choose the appropriate mode for common functions such as counters, adders, subtractors, and arithmetic functions. If required, you can also create special-purpose functions that specify which ALM operating mode to use for optimal performance.

Normal Mode

The normal mode is suitable for general logic applications and combinational functions. In this mode, up to eight data inputs from the LAB local interconnect are inputs to the combinational logic. The normal mode allows two functions to be implemented in one Stratix II ALM, or an ALM to implement a single function of up to six inputs. The ALM can support certain combinations of completely independent functions and various combinations of functions which have common inputs. Figure 2–7 shows the supported LUT combinations in normal mode.

Figure 2–7. ALM in Normal Mode *Note (1)*

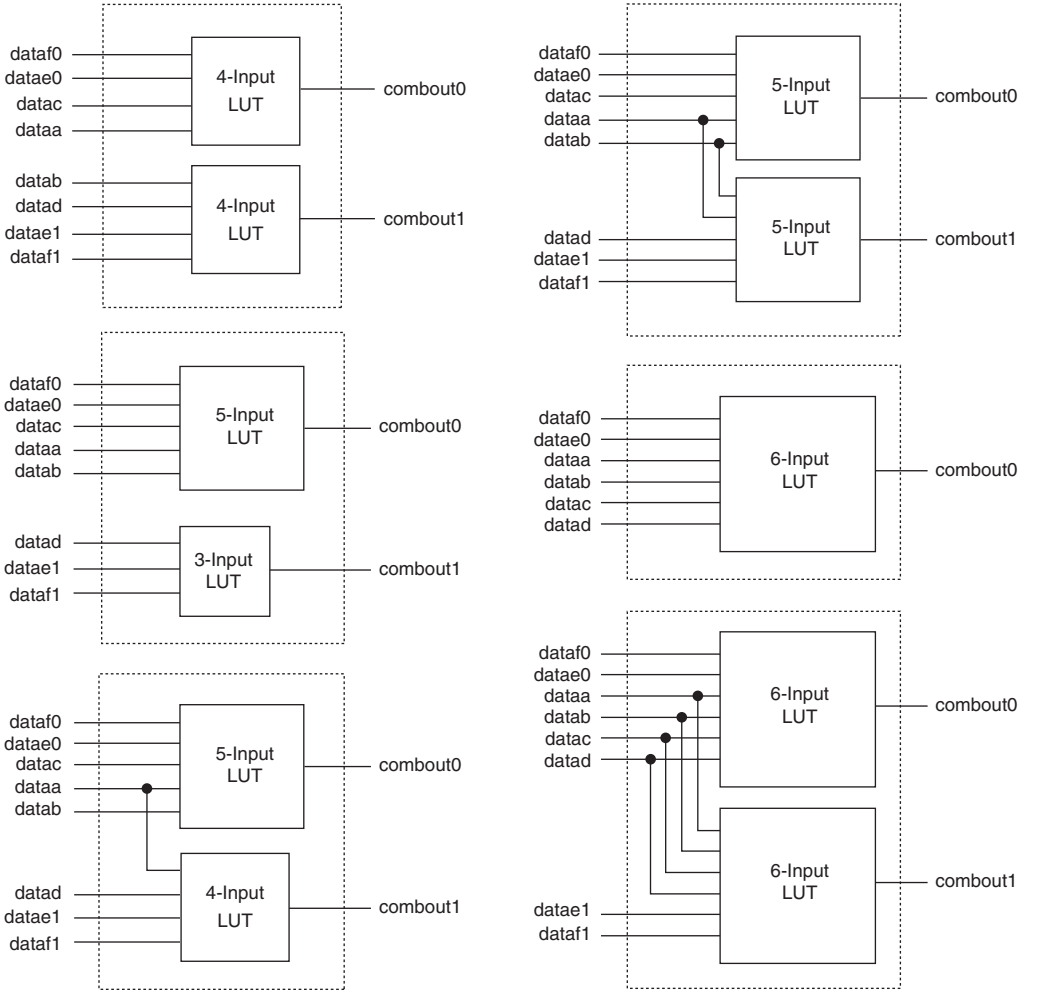

Note to Figure 2–7:

(1) Combinations of functions with fewer inputs than those shown are also supported. For example, combinations of functions with the following number of inputs are supported: 4 and 3, 3 and 3, 3 and 2, 5 and 2, etc.

The normal mode provides complete backward compatibility with four-input LUT architectures. Two independent functions of four inputs or less can be implemented in one Stratix II ALM. In addition, a five-input function and an independent three-input function can be implemented without sharing inputs.

For the packing of two five-input functions into one ALM, the functions must have at least two common inputs. The common inputs are dataa and datab. The combination of a four-input function with a five-input function requires one common input (either dataa or datab).

In the case of implementing two six-input functions in one ALM, four inputs must be shared and the combinational function must be the same. For example, a 4 × 2 crossbar switch (two 4-to-1 multiplexers with common inputs and unique select lines) can be implemented in one ALM, as shown in Figure 2–8. The shared inputs are dataa, datab, datac, and datad, while the unique select lines are datae0 and dataf0 for function0, and datae1 and dataf1 for function1. This crossbar switch consumes four LUTs in a four-input LUT-based architecture.

Figure 2–8. 4 × 2 Crossbar Switch Example

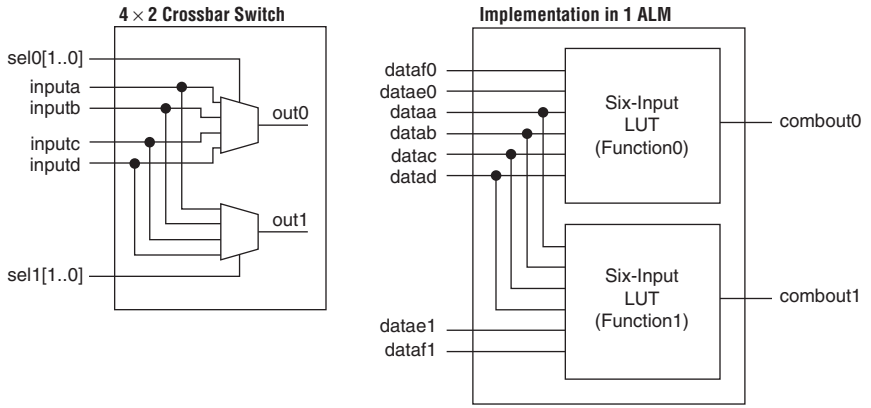

In a sparsely used device, functions that could be placed into one ALM may be implemented in separate ALMs. The Quartus II Compiler spreads a design out to achieve the best possible performance. As a device begins to fill up, the Quartus II software automatically utilizes the full potential of the Stratix II ALM. The Quartus II Compiler automatically searches for functions of common inputs or completely independent functions to be placed into one ALM and to make efficient use of the device resources. In addition, you can manually control resource usage by setting location assignments.

Any six-input function can be implemented utilizing inputs dataa, datab, datac, datad, and either datae0 and dataf0 or datae1 and dataf1. If datae0 and dataf0 are utilized, the output is driven to register0, and/or register0 is bypassed and the data drives out to the interconnect using the top set of output drivers (see Figure 2–9). If

datae1 and dataf1 are utilized, the output drives to register1 and/or bypasses register1 and drives to the interconnect using the bottom set of output drivers. The Quartus II Compiler automatically selects the inputs to the LUT. Asynchronous load data for the register comes from the datae or dataf input of the ALM. ALMs in normal mode support register packing.

Figure 2–9. 6-Input Function in Normal Mode *Notes (1), (2)*

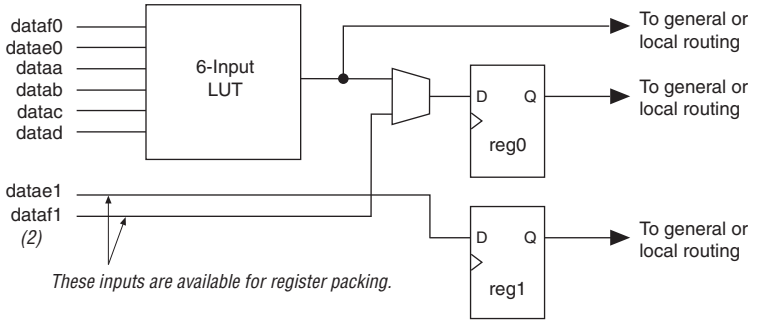

Notes to Figure 2–9:

(1) If datae1 and dataf1 are used as inputs to the six-input function, then datae0 and dataf0 are available for register packing.

(2) The dataf1 input is available for register packing only if the six-input function is un-registered.

Extended LUT Mode

The extended LUT mode is used to implement a specific set of seven-input functions. The set must be a 2-to-1 multiplexer fed by two arbitrary five-input functions sharing four inputs. Figure 2–10 shows the template of supported seven-input functions utilizing extended LUT mode. In this mode, if the seven-input function is unregistered, the unused eighth input is available for register packing.

Functions that fit into the template shown in Figure 2–10 occur naturally in designs. These functions often appear in designs as "if-else" statements in Verilog HDL or VHDL code.

Figure 2–10. Template for Supported Seven-Input Functions in Extended LUT Mode

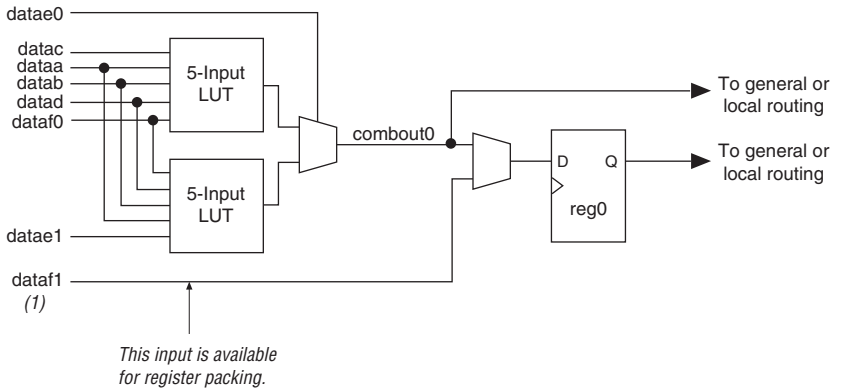

Note to Figure 2–10:

(1) If the seven-input function is unregistered, the unused eighth input is available for register packing. The second register, `reg1`, is not available.

Arithmetic Mode

The arithmetic mode is ideal for implementing adders, counters, accumulators, wide parity functions, and comparators. An ALM in arithmetic mode uses two sets of two four-input LUTs along with two dedicated full adders. The dedicated adders allow the LUTs to be available to perform pre-adder logic; therefore, each adder can add the output of two four-input functions. The four LUTs share the `dataa` and `datab` inputs. As shown in Figure 2–11, the carry-in signal feeds to `adder0`, and the carry-out from `adder0` feeds to carry-in of `adder1`. The carry-out from `adder1` drives to `adder0` of the next ALM in the LAB. ALMs in arithmetic mode can drive out registered and/or unregistered versions of the adder outputs.

Figure 2–11. ALM in Arithmetic Mode

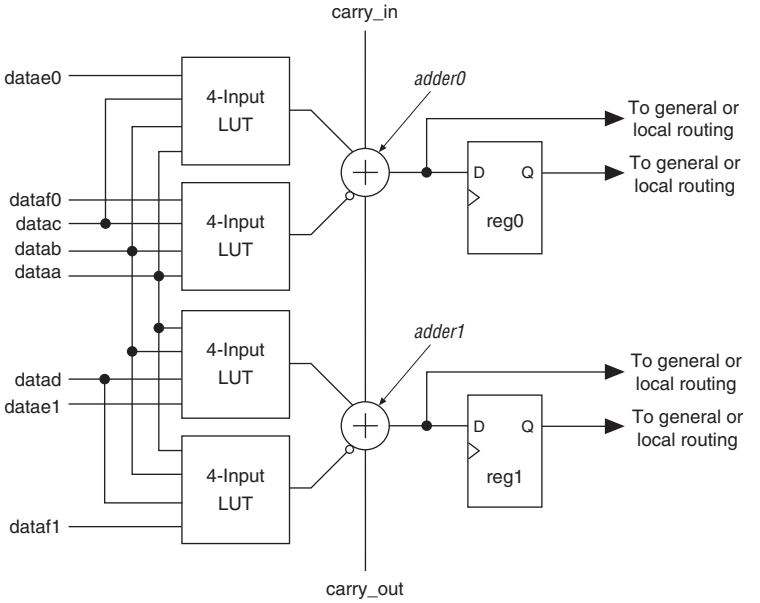

While operating in arithmetic mode, the ALM can support simultaneous use of the adder's carry output along with combinational logic outputs. In this operation, the adder output is ignored. This usage of the adder with the combinational logic output provides resource savings of up to 50% for functions that can use this ability. An example of such functionality is a conditional operation, such as the one shown in Figure 2–12. The equation for this example is:

$$R = (X < Y) ? Y : X$$

To implement this function, the adder is used to subtract 'Y' from 'X.' If 'X' is less than 'Y,' the `carry_out` signal is '1.' The `carry_out` signal is fed to an adder where it drives out to the LAB local interconnect. It then feeds to the LAB-wide `syncload` signal. When asserted, `syncload` selects the `syncdata` input. In this case, the data 'Y' drives the `syncdata` inputs to the registers. If 'X' is greater than or equal to 'Y,' the `syncload` signal is de-asserted and 'X' drives the data port of the registers.

Figure 2–12. Conditional Operation Example

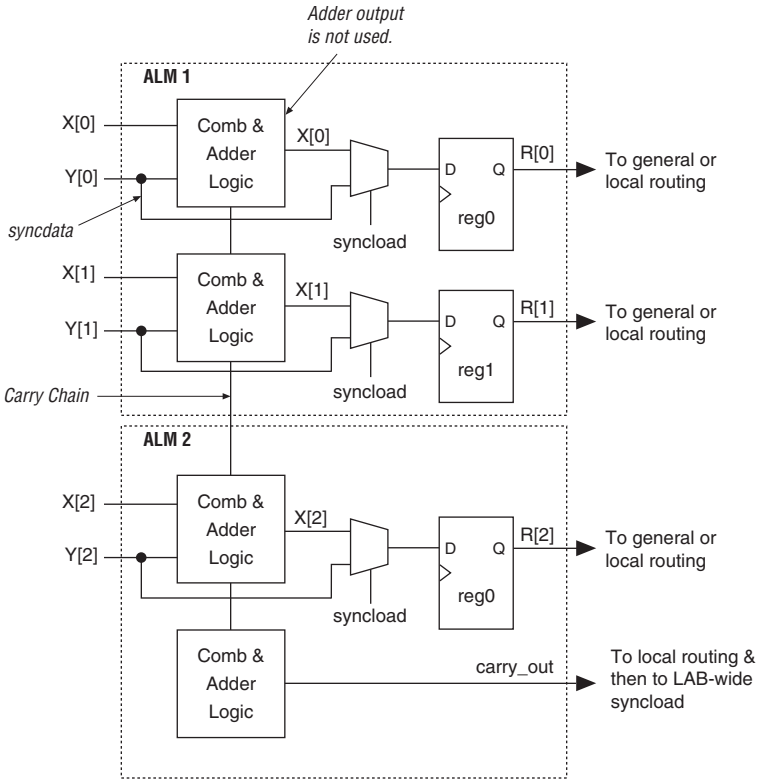

The arithmetic mode also offers clock enable, counter enable, synchronous up/down control, add/subtract control, synchronous clear, synchronous load. The LAB local interconnect data inputs generate the clock enable, counter enable, synchronous up/down and add/subtract control signals. These control signals are good candidates for the inputs that are shared between the four LUTs in the ALM. The synchronous clear and synchronous load options are LAB-wide signals that affect all registers in the LAB. The Quartus II software automatically places any registers that are not used by the counter into other LABs.

Carry Chain

The carry chain provides a fast carry function between the dedicated adders in arithmetic or shared arithmetic mode. Carry chains can begin in either the first ALM or the fifth ALM in an LAB. The final carry-out signal is routed to an ALM, where it is fed to local, row, or column interconnects.

The Quartus II Compiler automatically creates carry chain logic during design processing, or you can create it manually during design entry. Parameterized functions such as LPM functions automatically take advantage of carry chains for the appropriate functions.

The Quartus II Compiler creates carry chains longer than 16 (8 ALMs in arithmetic or shared arithmetic mode) by linking LABs together automatically. For enhanced fitting, a long carry chain runs vertically allowing fast horizontal connections to TriMatrix memory and DSP blocks. A carry chain can continue as far as a full column.

To avoid routing congestion in one small area of the device when a high fan-in arithmetic function is implemented, the LAB can support carry chains that only utilize either the top half or the bottom half of the LAB before connecting to the next LAB. This leaves the other half of the ALMs in the LAB available for implementing narrower fan-in functions in normal mode. Carry chains that use the top four ALMs in the first LAB carry into the top half of the ALMs in the next LAB within the column. Carry chains that use the bottom four ALMs in the first LAB carry into the bottom half of the ALMs in the next LAB within the column. Every other column of LABs is top-half bypassable, while the other LAB columns are bottom-half bypassable.

See the "MultiTrack Interconnect" on page 2–22 section for more information on carry chain interconnect.

Shared Arithmetic Mode

In shared arithmetic mode, the ALM can implement a three-input add. In this mode, the ALM is configured with four 4-input LUTs. Each LUT either computes the sum of three inputs or the carry of three inputs. The output of the carry computation is fed to the next adder (either to `adder1` in the same ALM or to `adder0` of the next ALM in the LAB) via a dedicated connection called the shared arithmetic chain. This shared arithmetic chain can significantly improve the performance of an adder tree by reducing the number of summation stages required to implement an adder tree. Figure 2–13 shows the ALM in shared arithmetic mode.

Figure 2–13. ALM in Shared Arithmetic Mode

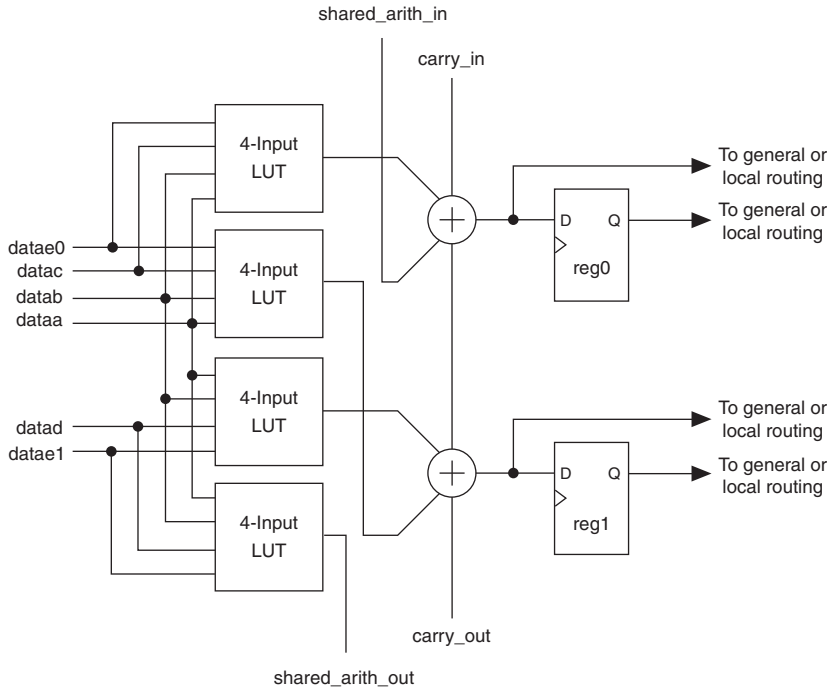

Note to Figure 2–13:
(1) Inputs `dataf0` and `dataf1` are available for register packing in shared arithmetic mode.

Adder trees can be found in many different applications. For example, the summation of the partial products in a logic-based multiplier can be implemented in a tree structure. Another example is a correlator function that can use a large adder tree to sum filtered data samples in a given time frame to recover or to de-spread data which was transmitted utilizing spread spectrum technology.

An example of a three-bit add operation utilizing the shared arithmetic mode is shown in Figure 2–14. The partial sum `(S[2..0])` and the partial carry `(C[2..0])` is obtained using the LUTs, while the result `(R[2..0])` is computed using the dedicated adders.

Figure 2–14. Example of a 3-bit Add Utilizing Shared Arithmetic Mode

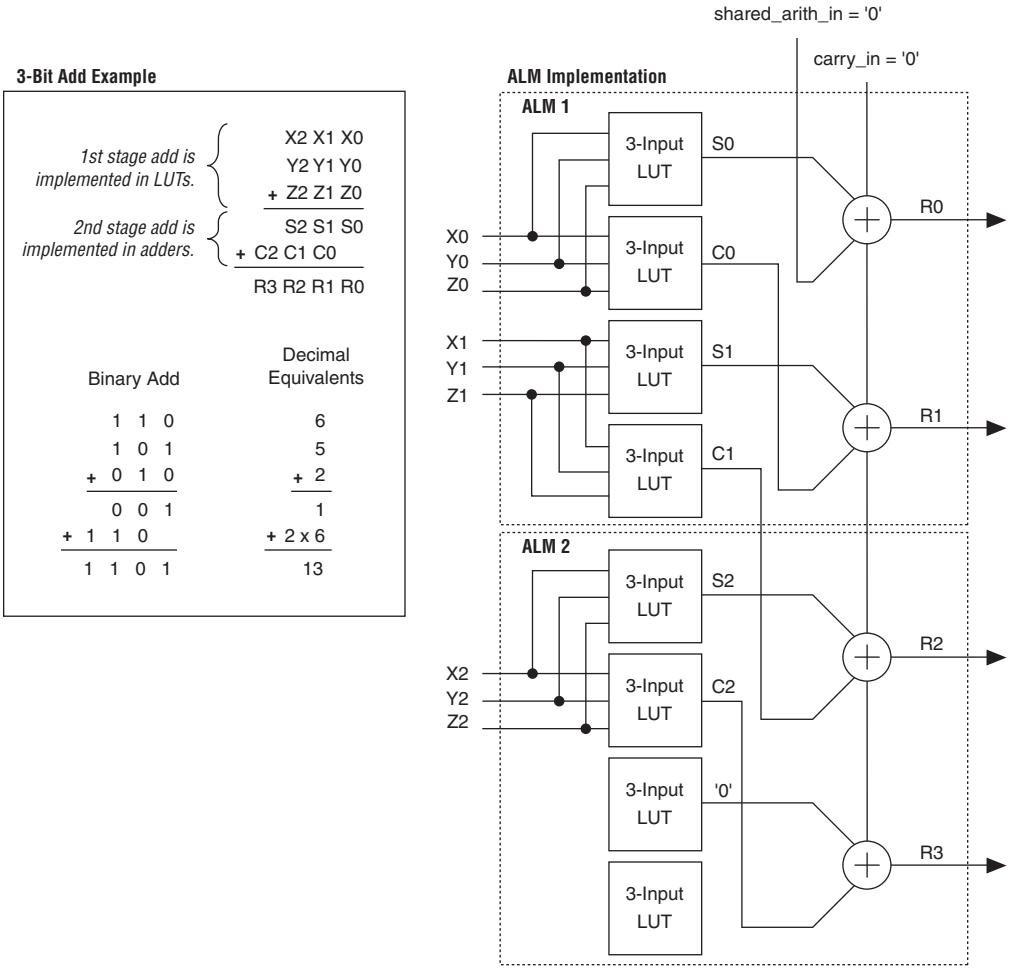

Shared Arithmetic Chain

In addition to the dedicated carry chain routing, the shared arithmetic chain available in shared arithmetic mode allows the ALM to implement a three-input add. This significantly reduces the resources necessary to implement large adder trees or correlator functions.

The shared arithmetic chains can begin in either the first or fifth ALM in an LAB. The Quartus II Compiler creates shared arithmetic chains longer than 16 (8 ALMs in arithmetic or shared arithmetic mode) by linking LABs together automatically. For enhanced fitting, a long shared

arithmetic chain runs vertically allowing fast horizontal connections to TriMatrix memory and DSP blocks. A shared arithmetic chain can continue as far as a full column.

Similar to the carry chains, the shared arithmetic chains are also top- or bottom-half bypassable. This capability allows the shared arithmetic chain to cascade through half of the ALMs in a LAB while leaving the other half available for narrower fan-in functionality. Every other LAB column is top-half bypassable, while the other LAB columns are bottom-half bypassable.

See the "MultiTrack Interconnect" on page 2–22 section for more information on shared arithmetic chain interconnect.

Register Chain

In addition to the general routing outputs, the ALMs in an LAB have register chain outputs. The register chain routing allows registers in the same LAB to be cascaded together. The register chain interconnect allows an LAB to use LUTs for a single combinational function and the registers to be used for an unrelated shift register implementation. These resources speed up connections between ALMs while saving local interconnect resources (see Figure 2–15). The Quartus II Compiler automatically takes advantage of these resources to improve utilization and performance.

Figure 2–15. Register Chain within an LAB *Note (1)*

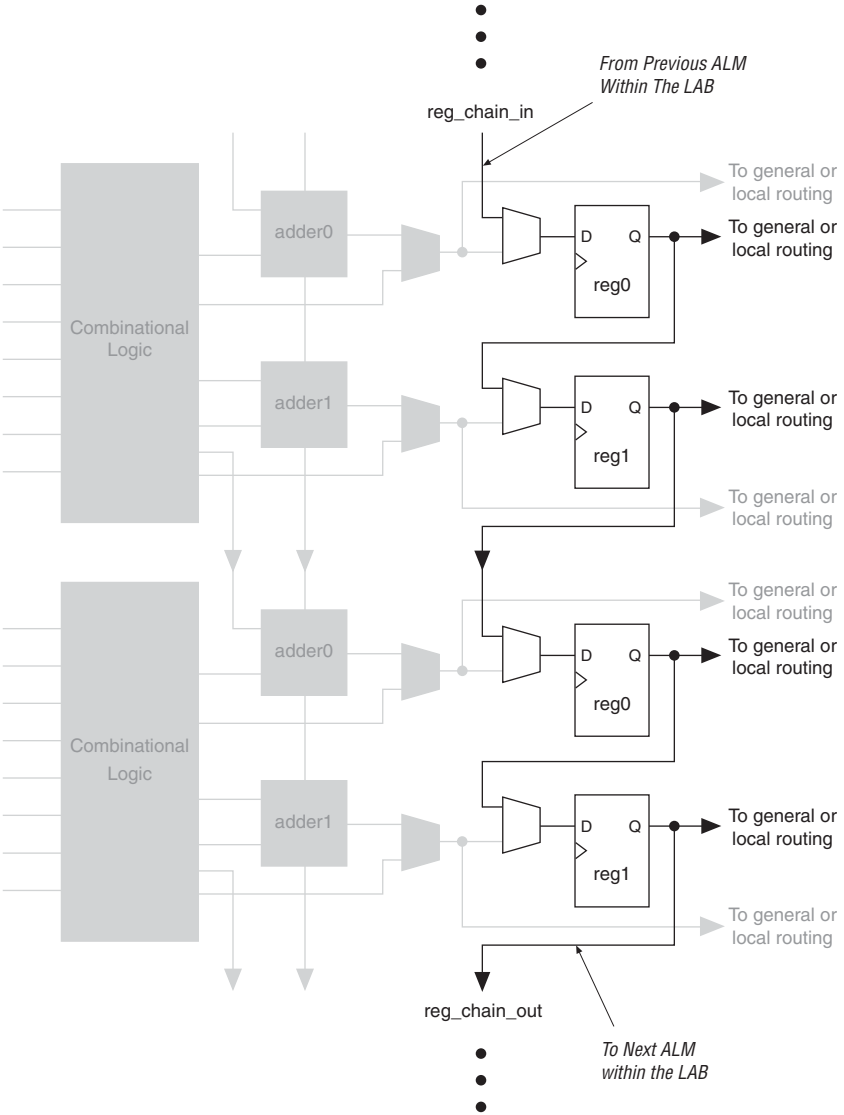

Note to Figure 2–15:
(1) The combinational or adder logic can be utilized to implement an unrelated, un-registered function.

See the "MultiTrack Interconnect" on page 2–22 section for more information on register chain interconnect.

Clear & Preset Logic Control

LAB-wide signals control the logic for the register's clear and load/preset signals. The ALM directly supports an asynchronous clear and preset function. The register preset is achieved through the asynchronous load of a logic high. The direct asynchronous preset does not require a NOT-gate push-back technique. Stratix II devices support simultaneous asynchronous load/preset, and clear signals. An asynchronous clear signal takes precedence if both signals are asserted simultaneously. Each LAB supports up to two clears and one load/preset signal.

In addition to the clear and load/preset ports, Stratix II devices provide a device-wide reset pin (DEV_CLRn) that resets all registers in the device. An option set before compilation in the Quartus II software controls this pin. This device-wide reset overrides all other control signals.

MultiTrack Interconnect

In the Stratix II architecture, connections between ALMs, TriMatrix memory, DSP blocks, and device I/O pins are provided by the MultiTrack interconnect structure with DirectDrive™ technology. The MultiTrack interconnect consists of continuous, performance-optimized routing lines of different lengths and speeds used for inter- and intra-design block connectivity. The Quartus II Compiler automatically places critical design paths on faster interconnects to improve design performance.

DirectDrive technology is a deterministic routing technology that ensures identical routing resource usage for any function regardless of placement in the device. The MultiTrack interconnect and DirectDrive technology simplify the integration stage of block-based designing by eliminating the re-optimization cycles that typically follow design changes and additions.

The MultiTrack interconnect consists of row and column interconnects that span fixed distances. A routing structure with fixed length resources for all devices allows predictable and repeatable performance when migrating through different device densities. Dedicated row interconnects route signals to and from LABs, DSP blocks, and TriMatrix memory in the same row. These row resources include:

- Direct link interconnects between LABs and adjacent blocks
- R4 interconnects traversing four blocks to the right or left
- R24 row interconnects for high-speed access across the length of the device

The direct link interconnect allows an LAB, DSP block, or TriMatrix memory block to drive into the local interconnect of its left and right neighbors and then back into itself. This provides fast communication between adjacent LABs and/or blocks without using row interconnect resources.

The R4 interconnects span four LABs, three LABs and one M512 RAM block, two LABs and one M4K RAM block, or two LABs and one DSP block to the right or left of a source LAB. These resources are used for fast row connections in a four-LAB region. Every LAB has its own set of R4 interconnects to drive either left or right. Figure 2–16 shows R4 interconnect connections from an LAB. R4 interconnects can drive and be driven by DSP blocks and RAM blocks and row IOEs. For LAB interfacing, a primary LAB or LAB neighbor can drive a given R4 interconnect. For R4 interconnects that drive to the right, the primary LAB and right neighbor can drive on to the interconnect. For R4 interconnects that drive to the left, the primary LAB and its left neighbor can drive on to the interconnect. R4 interconnects can drive other R4 interconnects to extend the range of LABs they can drive. R4 interconnects can also drive C4 and C16 interconnects for connections from one row to another. Additionally, R4 interconnects can drive R24 interconnects.

Figure 2–16. R4 Interconnect Connections *Notes (1), (2), (3)*

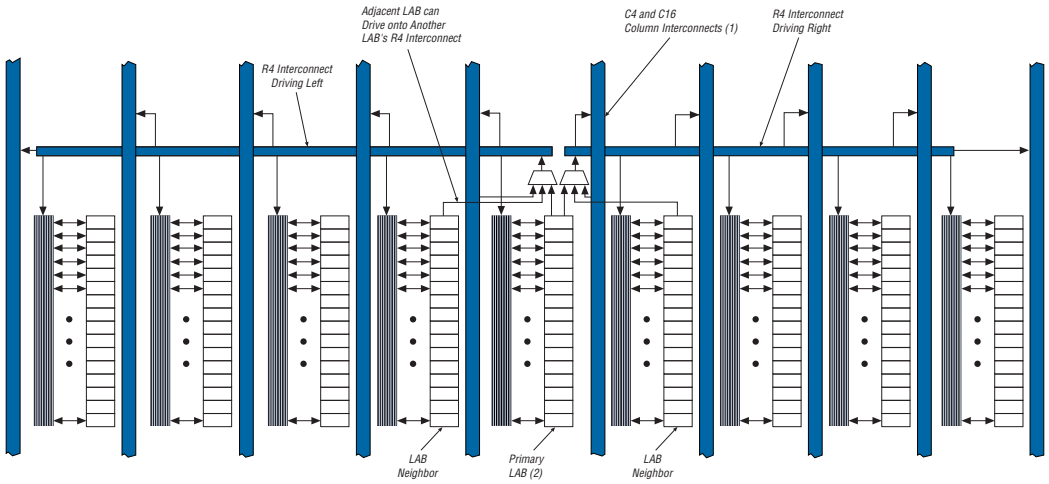

Notes to Figure 2–16:

(1) C4 and C16 interconnects can drive R4 interconnects.

(2) This pattern is repeated for every LAB in the LAB row.

(3) The LABs in Figure 2–16 show the 16 possible logical outputs per LAB.

R24 row interconnects span 24 LABs and provide the fastest resource for long row connections between LABs, TriMatrix memory, DSP blocks, and Row IOEs. The R24 row interconnects can cross M-RAM blocks. R24 row interconnects drive to other row or column interconnects at every fourth LAB and do not drive directly to LAB local interconnects. R24 row interconnects drive LAB local interconnects via R4 and C4 interconnects. R24 interconnects can drive R24, R4, C16, and C4 interconnects.

The column interconnect operates similarly to the row interconnect and vertically routes signals to and from LABs, TriMatrix memory, DSP blocks, and IOEs. Each column of LABs is served by a dedicated column interconnect. These column resources include:

- Shared arithmetic chain interconnects in an LAB
- Carry chain interconnects in an LAB and from LAB to LAB
- Register chain interconnects in an LAB
- C4 interconnects traversing a distance of four blocks in up and down direction
- C16 column interconnects for high-speed vertical routing through the device

Stratix II devices include an enhanced interconnect structure in LABs for routing shared arithmetic chains and carry chains for efficient arithmetic functions. The register chain connection allows the register output of one ALM to connect directly to the register input of the next ALM in the LAB for fast shift registers. These ALM to ALM connections bypass the local interconnect. The Quartus II Compiler automatically takes advantage of these resources to improve utilization and performance. Figure 2–17 shows the shared arithmetic chain, carry chain and register chain interconnects.

Figure 2–17. Shared Arithmetic Chain, Carry Chain & Register Chain Interconnects

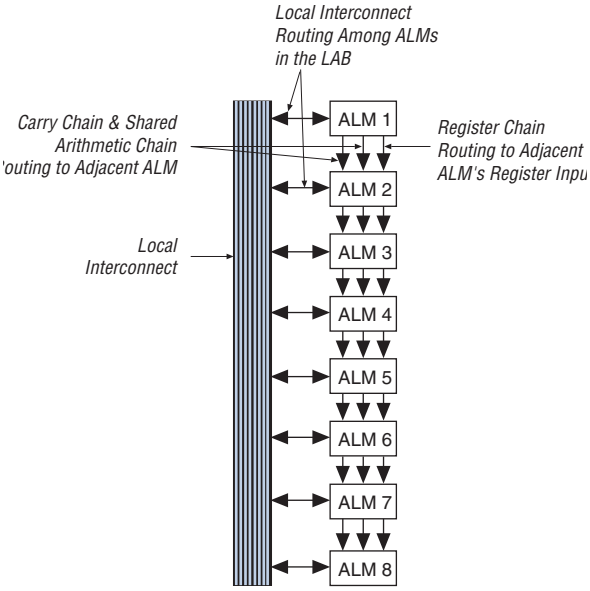

The C4 interconnects span four LABs, M512, or M4K blocks up or down from a source LAB. Every LAB has its own set of C4 interconnects to drive either up or down. Figure 2–18 shows the C4 interconnect connections from an LAB in a column. The C4 interconnects can drive and be driven by all types of architecture blocks, including DSP blocks, TriMatrix memory blocks, and column and row IOEs. For LAB interconnection, a primary LAB or its LAB neighbor can drive a given C4 interconnect. C4 interconnects can drive each other to extend their range as well as drive row interconnects for column-to-column connections.

Figure 2–18. C4 Interconnect Connections *Note (1)*

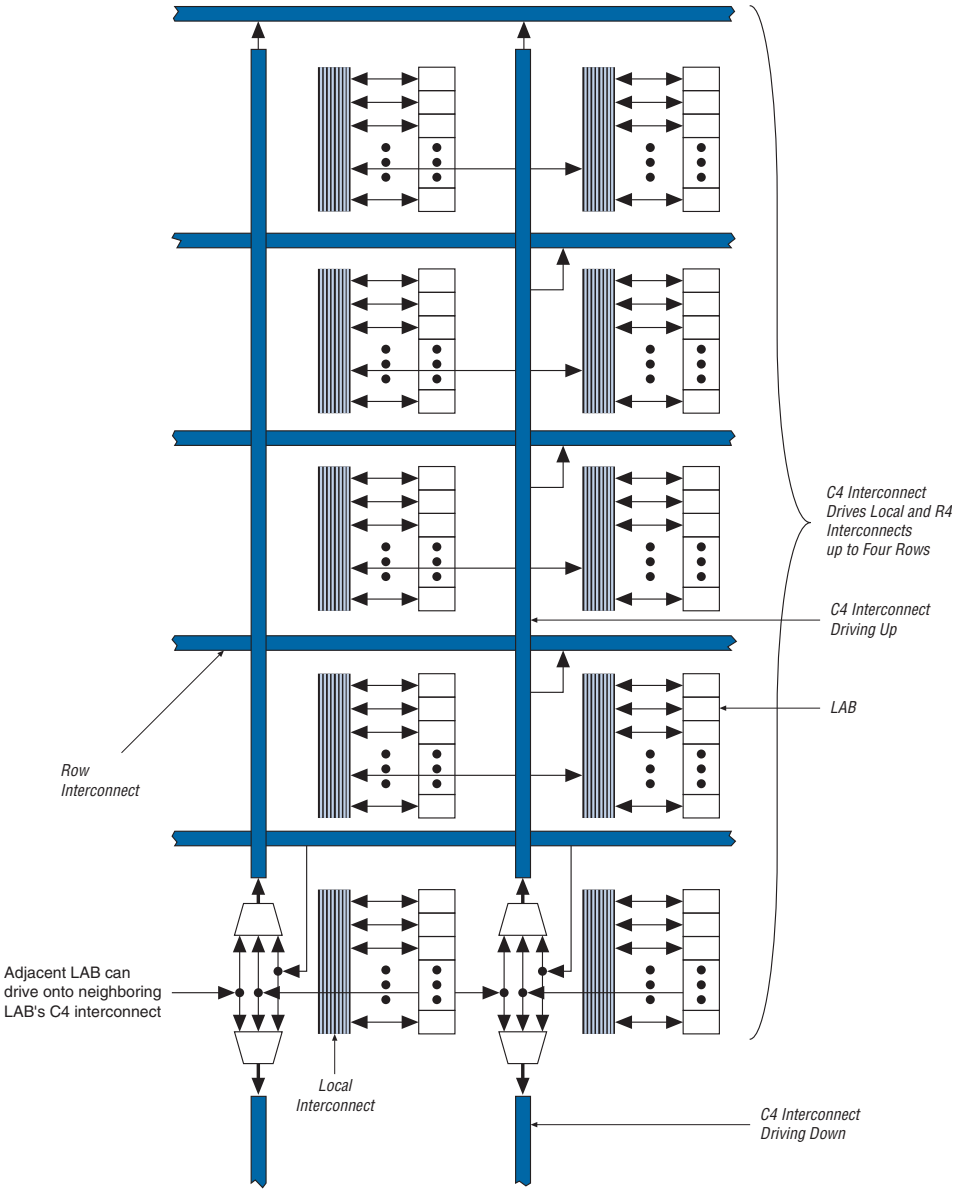

Note to Figure 2–18:
(1) Each C4 interconnect can drive either up or down four rows.

C16 column interconnects span a length of 16 LABs and provide the fastest resource for long column connections between LABs, TriMatrix memory blocks, DSP blocks, and IOEs. C16 interconnects can cross M-RAM blocks and also drive to row and column interconnects at every fourth LAB. C16 interconnects drive LAB local interconnects via C4 and R4 interconnects and do not drive LAB local interconnects directly.

All embedded blocks communicate with the logic array similar to LAB-to-LAB interfaces. Each block (that is, TriMatrix memory and DSP blocks) connects to row and column interconnects and has local interconnect regions driven by row and column interconnects. These blocks also have direct link interconnects for fast connections to and from a neighboring LAB. All blocks are fed by the row LAB clocks, `labclk[5..0]`.

Table 2–2 shows the Stratix II device's routing scheme.

Table 2–2. Stratix II Device Routing Scheme (Part 1 of 2)

Source	Destination															
	Shared Arithmetic Chain	Carry Chain	Register Chain	Local Interconnect	Direct Link Interconnect	R4 Interconnect	R24 Interconnect	C4 Interconnect	C16 Interconnect	ALM	M512 RAM Block	M4K RAM Block	M-RAM Block	DSP Blocks	Column IOE	Row IOE
Shared arithmetic chain										✓						
Carry chain										✓						
Register chain										✓						
Local interconnect										✓	✓	✓	✓	✓	✓	✓
Direct link interconnect				✓												
R4 interconnect				✓		✓	✓	✓	✓							
R24 interconnect						✓	✓	✓	✓							
C4 interconnect				✓		✓		✓								
C16 interconnect						✓	✓	✓	✓							
ALM	✓	✓	✓	✓	✓	✓		✓								
M512 RAM block				✓	✓	✓		✓								
M4K RAM block				✓	✓	✓		✓								
M-RAM block					✓	✓	✓	✓								
DSP blocks					✓	✓		✓								

Table 2–2. Stratix II Device Routing Scheme (Part 2 of 2)

Source	Destination															
	Shared Arithmetic Chain	Carry Chain	Register Chain	Local Interconnect	Direct Link Interconnect	R4 Interconnect	R24 Interconnect	C4 Interconnect	C16 Interconnect	ALM	M512 RAM Block	M4K RAM Block	M-RAM Block	DSP Blocks	Column IOE	Row IOE
Column IOE					✓			✓	✓							
Row IOE					✓	✓	✓	✓								

TriMatrix Memory

TriMatrix memory consists of three types of RAM blocks: M512, M4K, and M-RAM. Although these memory blocks are different, they can all implement various types of memory with or without parity, including true dual-port, simple dual-port, and single-port RAM, ROM, and FIFO buffers. Table 2–3 shows the size and features of the different RAM blocks.

Table 2–3. TriMatrix Memory Features (Part 1 of 2)

Memory Feature	M512 RAM Block (32 × 18 Bits)	M4K RAM Block (128 × 36 Bits)	M-RAM Block (4K × 144 Bits)
Maximum performance	500 MHz	550 MHz	420 MHz
True dual-port memory		✓	✓
Simple dual-port memory	✓	✓	✓
Single-port memory	✓	✓	✓
Shift register	✓	✓	
ROM	✓	✓	*(1)*
FIFO buffer	✓	✓	✓
Pack mode		✓	✓
Byte enable	✓	✓	✓
Address clock enable		✓	✓
Parity bits	✓	✓	✓
Mixed clock mode	✓	✓	✓
Memory initialization (**.mif**)	✓	✓	

Table 2–3. TriMatrix Memory Features (Part 2 of 2)

Memory Feature	M512 RAM Block (32 × 18 Bits)	M4K RAM Block (128 × 36 Bits)	M-RAM Block (4K × 144 Bits)
Simple dual-port memory mixed width support	✓	✓	✓
True dual-port memory mixed width support		✓	✓
Power-up conditions	Outputs cleared	Outputs cleared	Outputs unknown
Register clears	Output registers	Output registers	Output registers
Mixed-port read-during-write	Unknown output/old data	Unknown output/old data	Unknown output
Configurations	512 × 1 256 × 2 128 × 4 64 × 8 64 × 9 32 × 16 32 × 18	4K × 1 2K × 2 1K × 4 512 × 8 512 × 9 256 × 16 256 × 18 128 × 32 128 × 36	64K × 8 64K × 9 32K × 16 32K × 18 16K × 32 16K × 36 8K × 64 8K × 72 4K × 128 4K × 144

Notes to Table 2–3:

(1) The M-RAM block does not support memory initializations. However, the M-RAM block can emulate a ROM function using a dual-port RAM bock. The Stratix II device must write to the dual-port memory once and then disable the write-enable ports afterwards.

Memory Block Size

TriMatrix memory provides three different memory sizes for efficient application support. The Quartus II software automatically partitions the user-defined memory into the embedded memory blocks using the most efficient size combinations. You can also manually assign the memory to a specific block size or a mixture of block sizes.

When applied to input registers, the asynchronous clear signal for the TriMatrix embedded memory immediately clears the input registers. However, the output of the memory block does not show the effects until the next clock edge. When applied to output registers, the asynchronous clear signal clears the output registers and the effects are seen immediately.

M512 RAM Block

The M512 RAM block is a simple dual-port memory block and is useful for implementing small FIFO buffers, DSP, and clock domain transfer applications. Each block contains 576 RAM bits (including parity bits). M512 RAM blocks can be configured in the following modes:

- Simple dual-port RAM
- Single-port RAM
- FIFO
- ROM
- Shift register



Violating the setup or hold time on the memory block address registers could corrupt memory contents. This applies to both read and write operations.

When configured as RAM or ROM, you can use an initialization file to pre-load the memory contents.

M512 RAM blocks can have different clocks on its inputs and outputs. The wren, datain, and write address registers are all clocked together from one of the two clocks feeding the block. The read address, rden, and output registers can be clocked by either of the two clocks driving the block. This allows the RAM block to operate in read/write or input/output clock modes. Only the output register can be bypassed. The six `labclk` signals or local interconnect can drive the `inclock`, `outclock`, `wren`, `rden`, and `outclr` signals. Because of the advanced interconnect between the LAB and M512 RAM blocks, ALMs can also control the `wren` and `rden` signals and the RAM clock, clock enable, and asynchronous clear signals. Figure 2–19 shows the M512 RAM block control signal generation logic.

The RAM blocks in Stratix II devices have local interconnects to allow ALMs and interconnects to drive into RAM blocks. The M512 RAM block local interconnect is driven by the R4, C4, and direct link interconnects from adjacent LABs. The M512 RAM blocks can communicate with LABs on either the left or right side through these row interconnects or with LAB columns on the left or right side with the column interconnects. The M512 RAM block has up to 16 direct link input connections from the left adjacent LABs and another 16 from the right adjacent LAB. M512 RAM outputs can also connect to left and right LABs through direct link interconnect. The M512 RAM block has equal opportunity for access and performance to and from LABs on either its left or right side. Figure 2–20 shows the M512 RAM block to logic array interface.

Figure 2–19. M512 RAM Block Control Signals

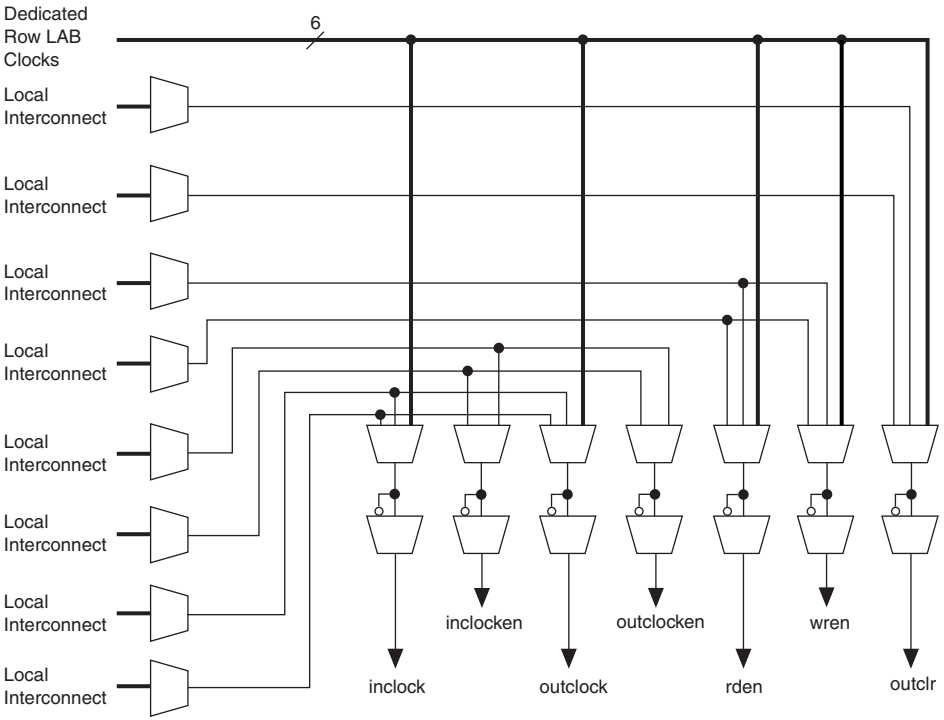

Figure 2–20. M512 RAM Block LAB Row Interface

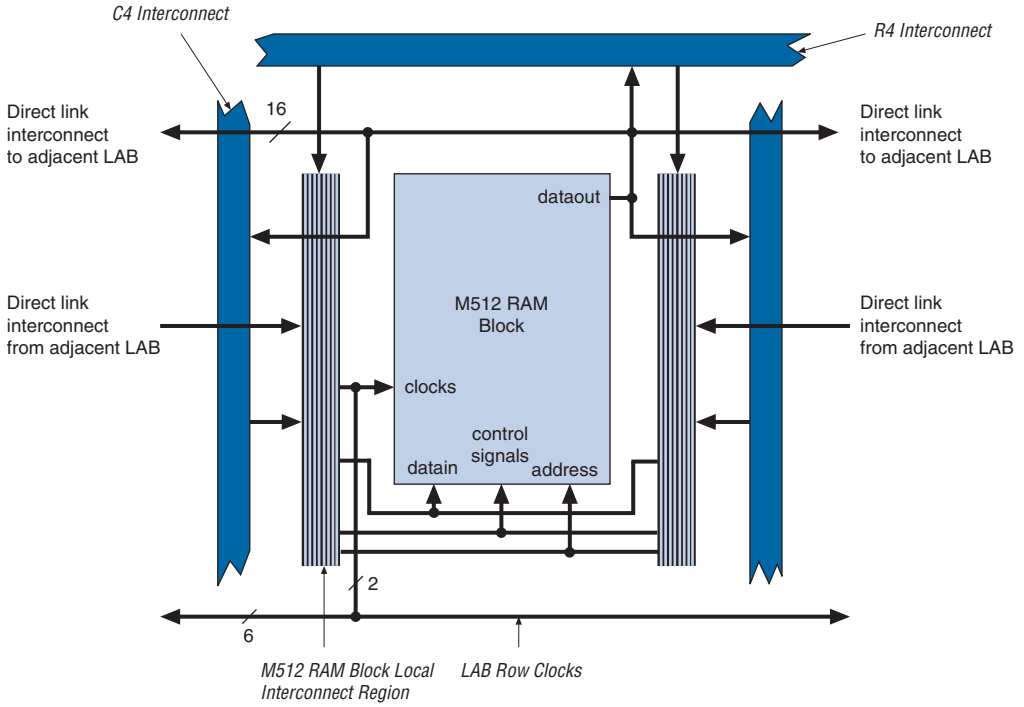

M4K RAM Blocks

The M4K RAM block includes support for true dual-port RAM. The M4K RAM block is used to implement buffers for a wide variety of applications such as storing processor code, implementing lookup schemes, and implementing larger memory applications. Each block contains 4,608 RAM bits (including parity bits). M4K RAM blocks can be configured in the following modes:

- True dual-port RAM
- Simple dual-port RAM
- Single-port RAM
- FIFO
- ROM
- Shift register

When configured as RAM or ROM, you can use an initialization file to pre-load the memory contents.

The M4K RAM blocks allow for different clocks on their inputs and outputs. Either of the two clocks feeding the block can clock M4K RAM block registers (renwe, address, byte enable, datain, and output registers). Only the output register can be bypassed. The six `labclk` signals or local interconnects can drive the control signals for the A and B ports of the M4K RAM block. ALMs can also control the `clock_a`, `clock_b`, `renwe_a`, `renwe_b`, `clr_a`, `clr_b`, `clocken_a`, and `clocken_b` signals, as shown in Figure 2–21.

The R4, C4, and direct link interconnects from adjacent LABs drive the M4K RAM block local interconnect. The M4K RAM blocks can communicate with LABs on either the left or right side through these row resources or with LAB columns on either the right or left with the column resources. Up to 16 direct link input connections to the M4K RAM Block are possible from the left adjacent LABs and another 16 possible from the right adjacent LAB. M4K RAM block outputs can also connect to left and right LABs through direct link interconnect. Figure 2–22 shows the M4K RAM block to logic array interface.

Figure 2–21. M4K RAM Block Control Signals

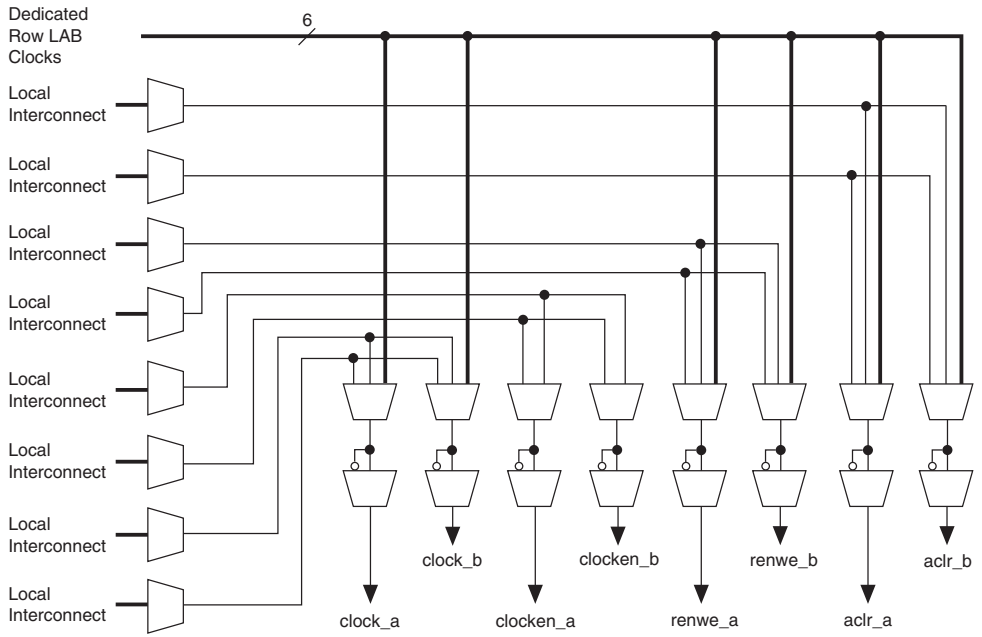

Figure 2–22. M4K RAM Block LAB Row Interface

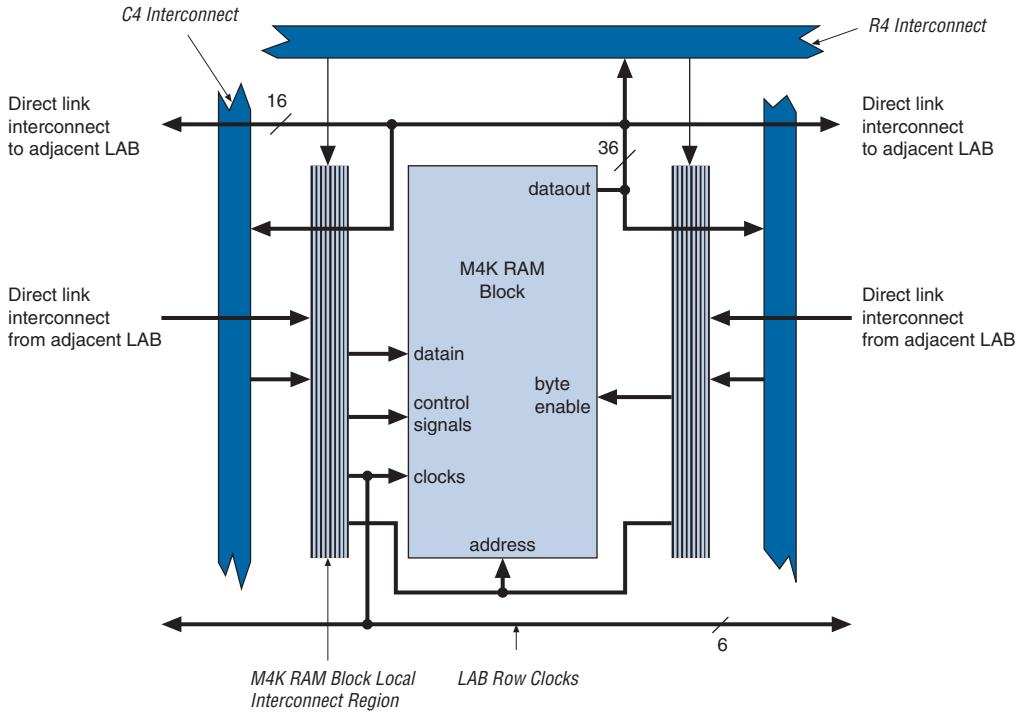

M-RAM Block

The largest TriMatrix memory block, the M-RAM block, is useful for applications where a large volume of data must be stored on-chip. Each block contains 589,824 RAM bits (including parity bits). The M-RAM block can be configured in the following modes:

- True dual-port RAM
- Simple dual-port RAM
- Single-port RAM
- FIFO

You cannot use an initialization file to initialize the contents of an M-RAM block. All M-RAM block contents power up to an undefined value. Only synchronous operation is supported in the M-RAM block, so all inputs are registered. Output registers can be bypassed.

Similar to all RAM blocks, M-RAM blocks can have different clocks on their inputs and outputs. Either of the two clocks feeding the block can clock M-RAM block registers (renwe, address, byte enable, datain, and output registers). The output register can be bypassed. The six `labclk` signals or local interconnect can drive the control signals for the A and B ports of the M-RAM block. ALMs can also control the `clock_a`, `clock_b`, `renwe_a`, `renwe_b`, `clr_a`, `clr_b`, `clocken_a`, and `clocken_b` signals as shown in Figure 2–23.

Figure 2–23. M-RAM Block Control Signals

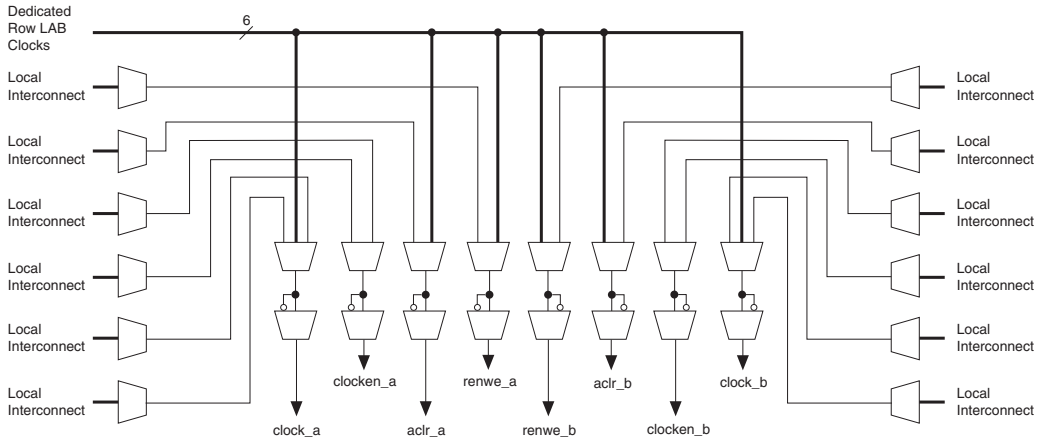

The R4, R24, C4, and direct link interconnects from adjacent LABs on either the right or left side drive the M-RAM block local interconnect. Up to 16 direct link input connections to the M-RAM block are possible from the left adjacent LABs and another 16 possible from the right adjacent LAB. M-RAM block outputs can also connect to left and right LABs through direct link interconnect. Figure 2–24 shows an example floorplan for the EP2S130 device and the location of the M-RAM interfaces. Figures 2–25 and 2–26 show the interface between the M-RAM block and the logic array.

Figure 2–24. EP2S130 Device with M-RAM Interface Locations *Note (1)*

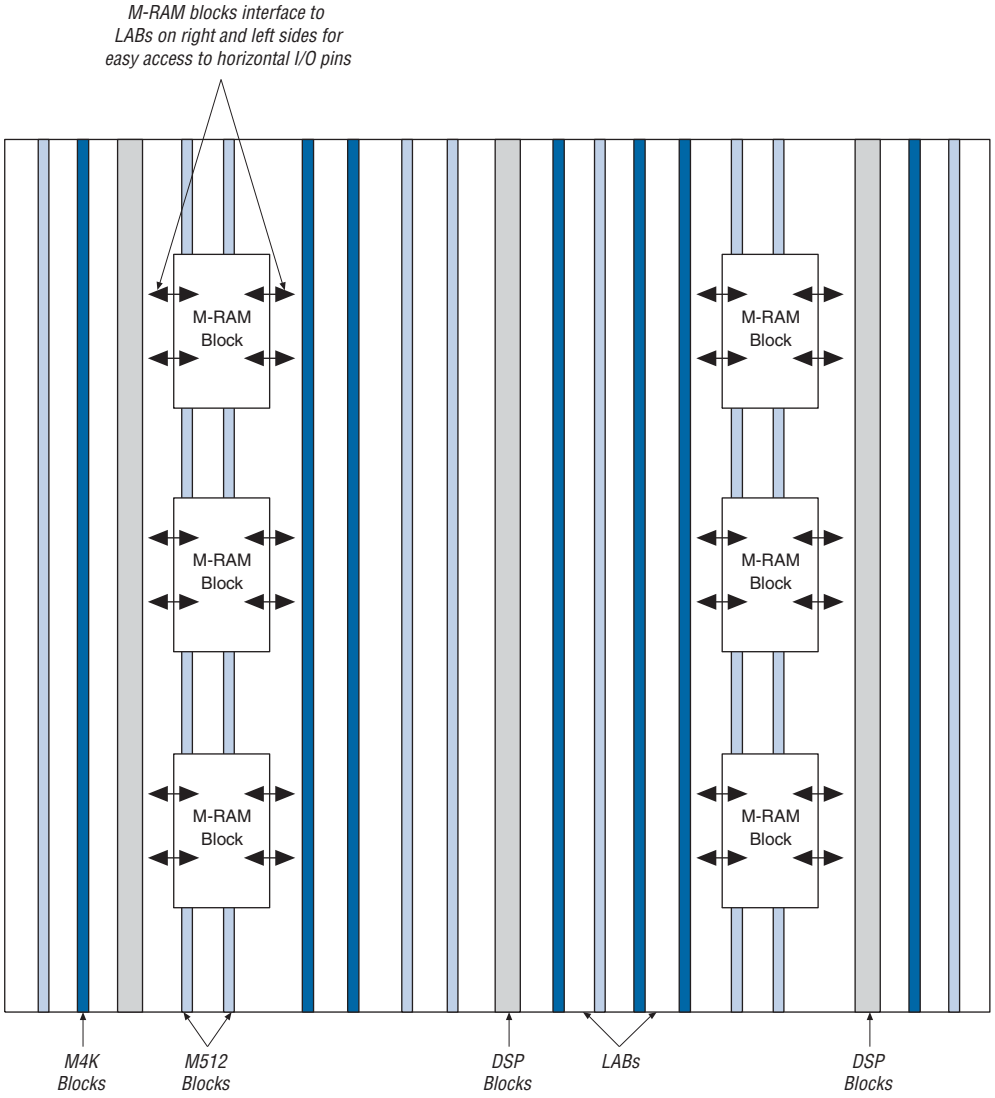

Note to Figure 2–24:

(1) The device shown is an EP2S130 device. The number and position of M-RAM blocks varies in other devices.

Figure 2–25. M-RAM Block LAB Row Interface *Note (1)*

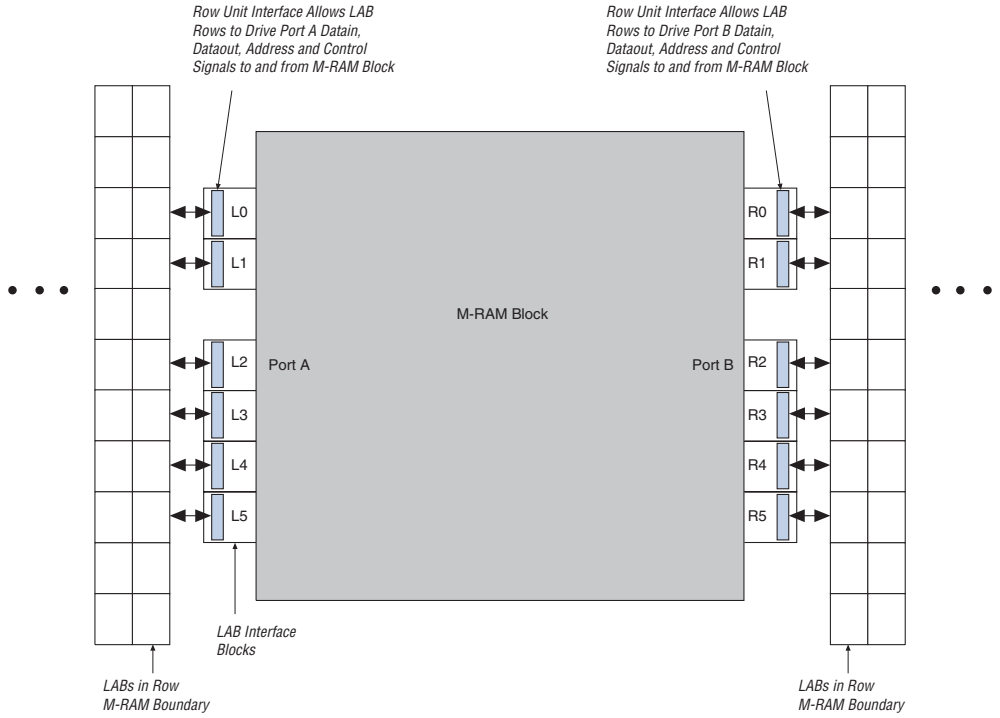

Note to Figure 2–25:
(1) Only R24 and C16 interconnects cross the M-RAM block boundaries.

Figure 2–26. M-RAM Row Unit Interface to Interconnect

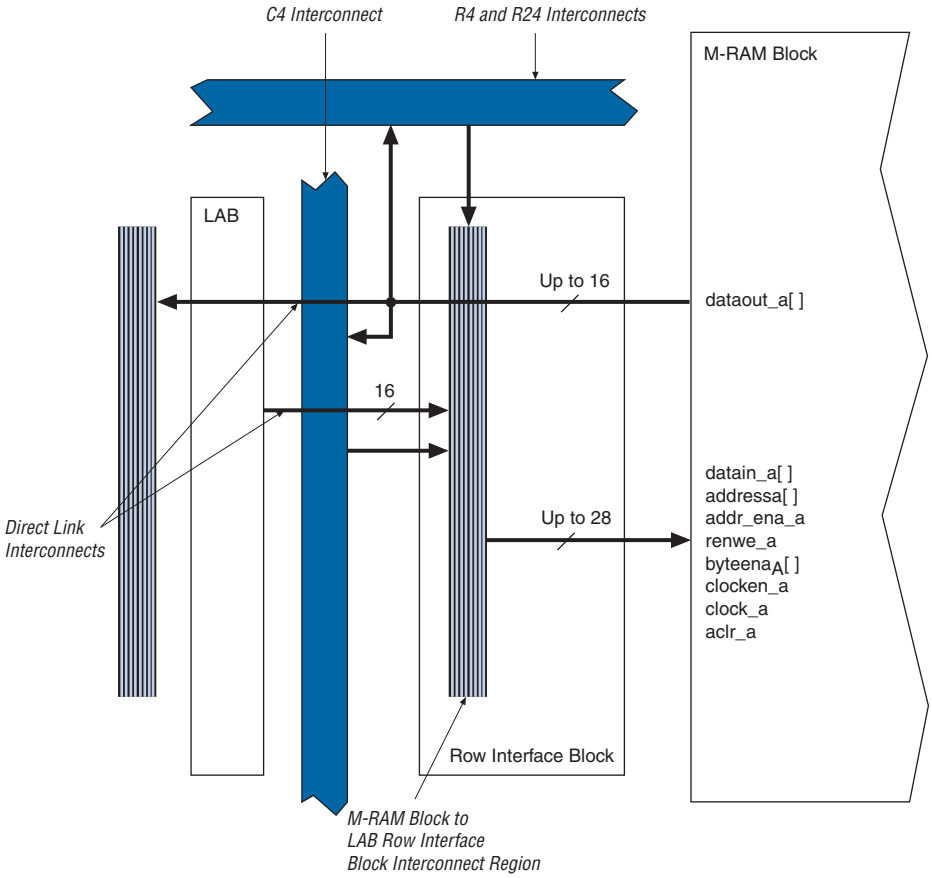

Table 2–4 shows the input and output data signal connections along with the address and control signal input connections to the row unit interfaces (L0 to L5 and R0 to R5).

Table 2–4. M-RAM Row Interface Unit Signals

Unit Interface Block	Input Signals	Output Signals
L0	datain_a[14..0] byteena_a[1..0]	dataout_a[11..0]
L1	datain_a[29..15] byteena_a[3..2]	dataout_a[23..12]
L2	datain_a[35..30] addressa[4..0] addr_ena_a clock_a clocken_a renwe_a aclr_a	dataout_a[35..24]
L3	addressa[15..5] datain_a[41..36]	dataout_a[47..36]
L4	datain_a[56..42] byteena_a[5..4]	dataout_a[59..48]
L5	datain_a[71..57] byteena_a[7..6]	dataout_a[71..60]
R0	datain_b[14..0] byteena_b[1..0]	dataout_b[11..0]
R1	datain_b[29..15] byteena_b[3..2]	dataout_b[23..12]
R2	datain_b[35..30] addressb[4..0] addr_ena_b clock_b clocken_b renwe_b aclr_b	dataout_b[35..24]
R3	addressb[15..5] datain_b[41..36]	dataout_b[47..36]
R4	datain_b[56..42] byteena_b[5..4]	dataout_b[59..48]
R5	datain_b[71..57] byteena_b[7..6]	dataout_b[71..60]



See the *TriMatrix Embedded Memory Blocks in Stratix II & Stratix II GX Devices* chapter in volume 2 of the *Stratix II Device Handbook* or the *Stratix II GX Device Handbook* for more information on TriMatrix memory.

Digital Signal Processing Block

The most commonly used DSP functions are FIR filters, complex FIR filters, IIR filters, fast Fourier transform (FFT) functions, direct cosine transform (DCT) functions, and correlators. All of these use the multiplier as the fundamental building block. Additionally, some applications need specialized operations such as multiply-add and multiply-accumulate operations. Stratix II devices provide DSP blocks to meet the arithmetic requirements of these functions.

Each Stratix II device has from two to four columns of DSP blocks to efficiently implement DSP functions faster than ALM-based implementations. Stratix II devices have up to 24 DSP blocks per column (see Table 2–5). Each DSP block can be configured to support up to:

- Eight 9 × 9-bit multipliers
- Four 18 × 18-bit multipliers
- One 36 × 36-bit multiplier

As indicated, the Stratix II DSP block can support one 36 × 36-bit multiplier in a single DSP block. This is true for any combination of signed, unsigned, or mixed sign multiplications.



This list only shows functions that can fit into a single DSP block. Multiple DSP blocks can support larger multiplication functions.

Figure 2–27 shows one of the columns with surrounding LAB rows.

Figure 2–27. DSP Blocks Arranged in Columns

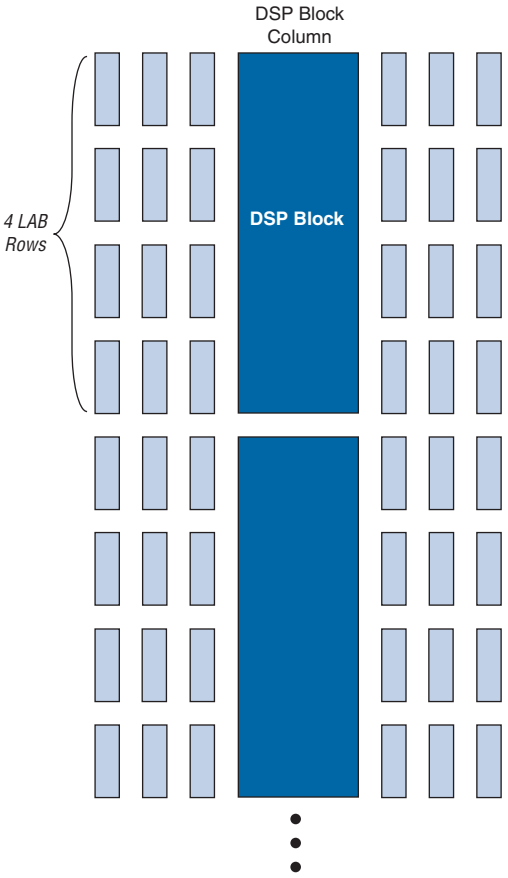

Table 2–5 shows the number of DSP blocks in each Stratix II device.

Table 2–5. DSP Blocks in Stratix II Devices *Note (1)*

Device	DSP Blocks	Total 9 × 9 Multipliers	Total 18 × 18 Multipliers	Total 36 × 36 Multipliers
EP2S15	12	96	48	12
EP2S30	16	128	64	16
EP2S60	36	288	144	36
EP2S90	48	384	192	48
EP2S130	63	504	252	63
EP2S180	96	768	384	96

Note to Table 2–5:

(1) Each device has either the numbers of 9 × 9-, 18 × 18-, or 36 × 36-bit multipliers shown. The total number of multipliers for each device is not the sum of all the multipliers.

DSP block multipliers can optionally feed an adder/subtractor or accumulator in the block depending on the configuration. This makes routing to ALMs easier, saves ALM routing resources, and increases performance, because all connections and blocks are in the DSP block. Additionally, the DSP block input registers can efficiently implement shift registers for FIR filter applications, and DSP blocks support Q1.15 format rounding and saturation.

Figure 2–28 shows the top-level diagram of the DSP block configured for 18 × 18-bit multiplier mode.

Figure 2–28. DSP Block Diagram for 18 × 18-Bit Configuration

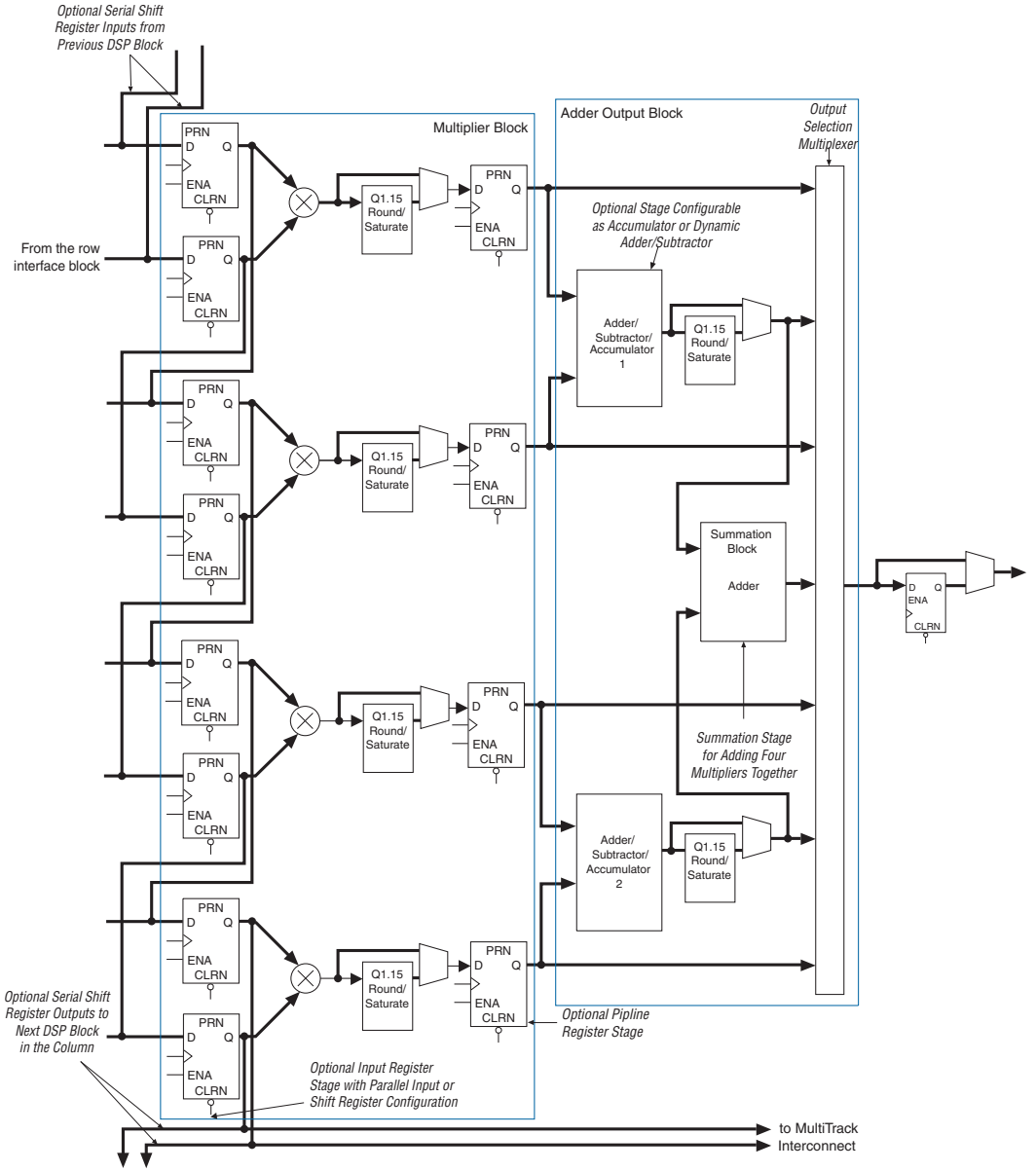

Modes of Operation

The adder, subtractor, and accumulate functions of a DSP block have four modes of operation:

- Simple multiplier
- Multiply-accumulator
- Two-multipliers adder
- Four-multipliers adder

Table 2–6 shows the different number of multipliers possible in each DSP block mode according to size. These modes allow the DSP blocks to implement numerous applications for DSP including FFTs, complex FIR, FIR, and 2D FIR filters, equalizers, IIR, correlators, matrix multiplication and many other functions. The DSP blocks also support mixed modes and mixed multiplier sizes in the same block. For example, half of one DSP block can implement one 18 × 18-bit multiplier in multiply-accumulator mode, while the other half of the DSP block implements four 9 × 9-bit multipliers in simple multiplier mode.

Table 2–6. Multiplier Size & Configurations per DSP Block

DSP Block Mode	9 × 9	18 × 18	36 × 36
Multiplier	Eight multipliers with eight product outputs	Four multipliers with four product outputs	One multiplier with one product output
Multiply-accumulator	-	Two 52-bit multiply-accumulate blocks	-
Two-multipliers adder	Four two-multiplier adder (two 9 × 9 complex multiply)	Two two-multiplier adder (one 18 × 18 complex multiply)	-
Four-multipliers adder	Two four-multiplier adder	One four-multiplier adder	-

DSP Block Interface

Stratix II device DSP block input registers can generate a shift register that can cascade down in the same DSP block column. Dedicated connections between DSP blocks provide fast connections between the shift register inputs to cascade the shift register chains. You can cascade registers within multiple DSP blocks for 9 × 9- or 18 × 18-bit FIR filters larger than four taps, with additional adder stages implemented in ALMs. If the DSP block is configured as 36 × 36 bits, the adder, subtractor, or accumulator stages are implemented in ALMs. Each DSP block can route the shift register chain out of the block to cascade multiple columns of DSP blocks.

The DSP block is divided into four block units that interface with four LAB rows on the left and right. Each block unit can be considered one complete 18 × 18-bit multiplier with 36 inputs and 36 outputs. A local interconnect region is associated with each DSP block. Like an LAB, this interconnect region can be fed with 16 direct link interconnects from the LAB to the left or right of the DSP block in the same row. R4 and C4 routing resources can access the DSP block's local interconnect region. The outputs also work similarly to LAB outputs as well. Eighteen outputs from the DSP block can drive to the left LAB through direct link interconnects and eighteen can drive to the right LAB though direct link interconnects. All 36 outputs can drive to R4 and C4 routing interconnects. Outputs can drive right- or left-column routing. Figures 2–29 and 2–30 show the DSP block interfaces to LAB rows.

Figure 2–29. DSP Block Interconnect Interface

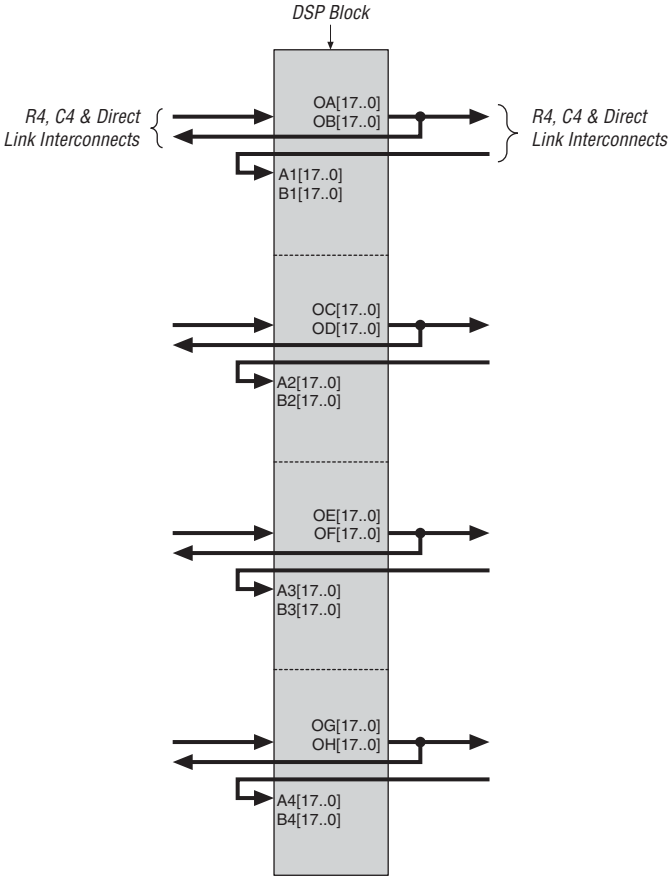

Figure 2–30. DSP Block Interface to Interconnect

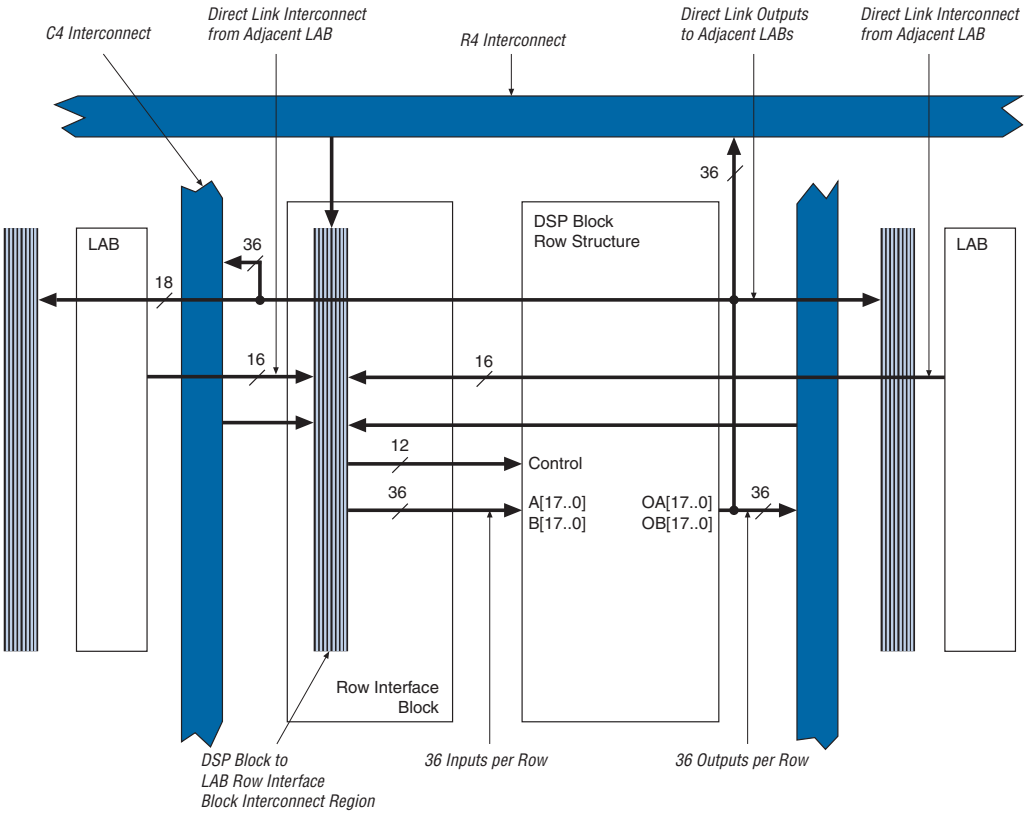

A bus of 44 control signals feeds the entire DSP block. These signals include clocks, asynchronous clears, clock enables, signed/unsigned control signals, addition and subtraction control signals, rounding and saturation control signals, and accumulator synchronous loads. The clock signals are routed from LAB row clocks and are generated from specific LAB rows at the DSP block interface.

The LAB row source for control signals, data inputs, and outputs is shown in Table 2–7.

Table 2–7. DSP Block Signal Sources & Destinations

LAB Row at Interface	Control Signals Generated	Data Inputs	Data Outputs
0	clock0 aclr0 ena0 mult01_saturate addnsub1_round/ accum_round addnsub1 signa sourcea sourceb	A1[17..0] B1[17..0]	OA[17..0] OB[17..0]
1	clock1 aclr1 ena1 accum_saturate mult01_round accum_sload sourcea sourceb mode0	A2[17..0] B2[17..0]	OC[17..0] OD[17..0]
2	clock2 aclr2 ena2 mult23_saturate addnsub3_round/ accum_round addnsub3 sign_b sourcea sourceb	A3[17..0] B3[17..0]	OE[17..0] OF[17..0]
3	clock3 aclr3 ena3 accum_saturate mult23_round accum_sload sourcea sourceb mode1	A4[17..0] B4[17..0]	OG[17..0] OH[17..0]



See the *DSP Blocks in Stratix II & Stratix II GX Devices* chapter in volume 2 of the *Stratix II Device Handbook* or the *Stratix II GX Device Handbook,* for more information on DSP blocks.

PLLs & Clock Networks

Stratix II devices provide a hierarchical clock structure and multiple PLLs with advanced features. The large number of clocking resources in combination with the clock synthesis precision provided by enhanced and fast PLLs provides a complete clock management solution.

Global & Hierarchical Clocking

Stratix II devices provide 16 dedicated global clock networks and 32 regional clock networks (eight per device quadrant). These clocks are organized into a hierarchical clock structure that allows for up to 24 clocks per device region with low skew and delay. This hierarchical clocking scheme provides up to 48 unique clock domains in Stratix II devices.

There are 16 dedicated clock pins (CLK[15..0]) to drive either the global or regional clock networks. Four clock pins drive each side of the device, as shown in Figures 2–31 and 2–32. Internal logic and enhanced and fast PLL outputs can also drive the global and regional clock networks. Each global and regional clock has a clock control block, which controls the selection of the clock source and dynamically enables/disables the clock to reduce power consumption. Table 2–8 shows global and regional clock features.

Table 2–8. Global & Regional Clock Features

Feature	Global Clocks	Regional Clocks
Number per device	16	32
Number available per quadrant	16	8
Sources	CLK pins, PLL outputs, or internal logic	CLK pins, PLL outputs, or internal logic
Dynamic clock source selection	✓ (1)	
Dynamic enable/disable	✓	✓

Note to Table 2–8:
(1) Dynamic source clock selection is supported for selecting between CLKp pins and PLL outputs only.

Global Clock Network

These clocks drive throughout the entire device, feeding all device quadrants. The global clock networks can be used as clock sources for all resources in the device-IOEs, ALMs, DSP blocks, and all memory blocks. These resources can also be used for control signals, such as clock enables and synchronous or asynchronous clears fed from the external pin. The

global clock networks can also be driven by internal logic for internally generated global clocks and asynchronous clears, clock enables, or other control signals with large fanout. Figure 2–31 shows the 16 dedicated CLK pins driving global clock networks.

Figure 2–31. Global Clocking

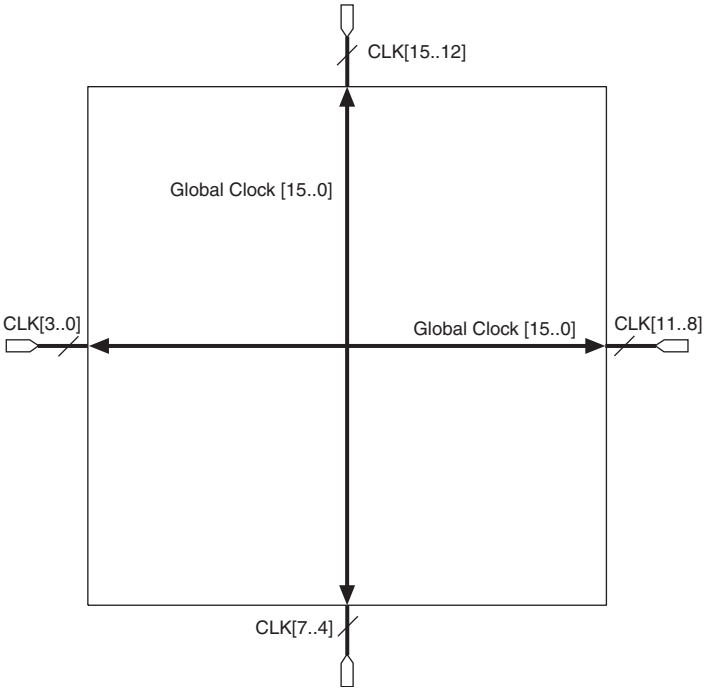

Regional Clock Network

There are eight regional clock networks RCLK[7..0] in each quadrant of the Stratix II device that are driven by the dedicated CLK[15..0] input pins, by PLL outputs, or by internal logic. The regional clock networks provide the lowest clock delay and skew for logic contained in a single quadrant. The CLK clock pins symmetrically drive the RCLK networks in a particular quadrant, as shown in Figure 2–32.

Figure 2–32. Regional Clocks

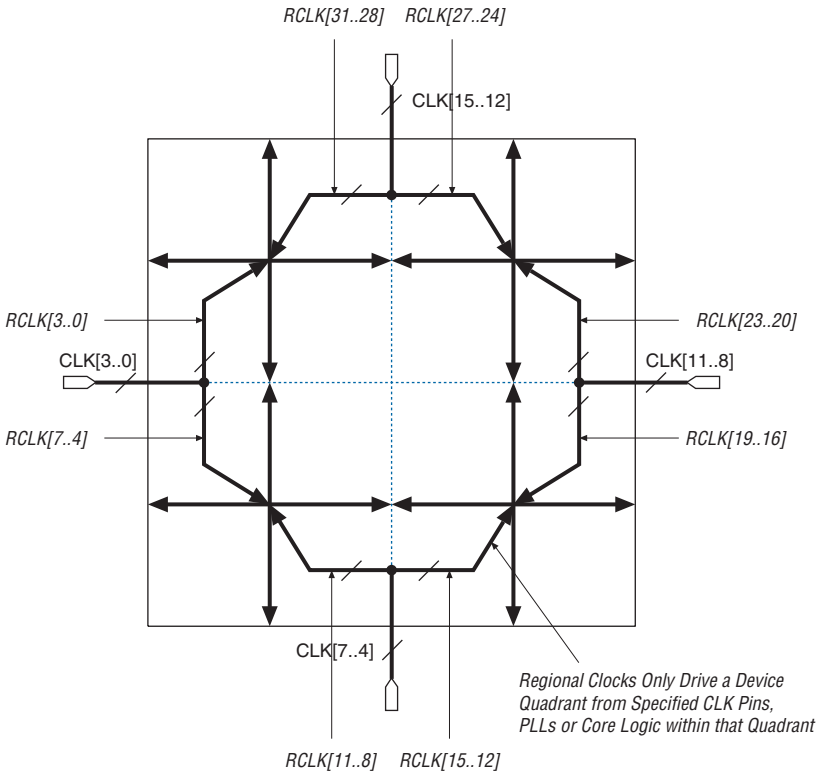

Dual-Regional Clock Network

A single source (CLK pin or PLL output) can generate a dual-regional clock by driving two regional clock network lines in adjacent quadrants (one from each quadrant). This allows logic that spans multiple quadrants to utilize the same low skew clock. The routing of this clock signal on an entire side has approximately the same speed but slightly higher clock skew when compared with a clock signal that drives a single quadrant. Internal logic-array routing can also drive a dual-regional clock. Clock pins and enhanced PLL outputs on the top and bottom can drive horizontal dual-regional clocks. Clock pins and fast PLL outputs on the left and right can drive vertical dual-regional clocks, as shown in Figure 2–33. Corner PLLs cannot drive dual-regional clocks.

Figure 2–33. Dual-Regional Clocks

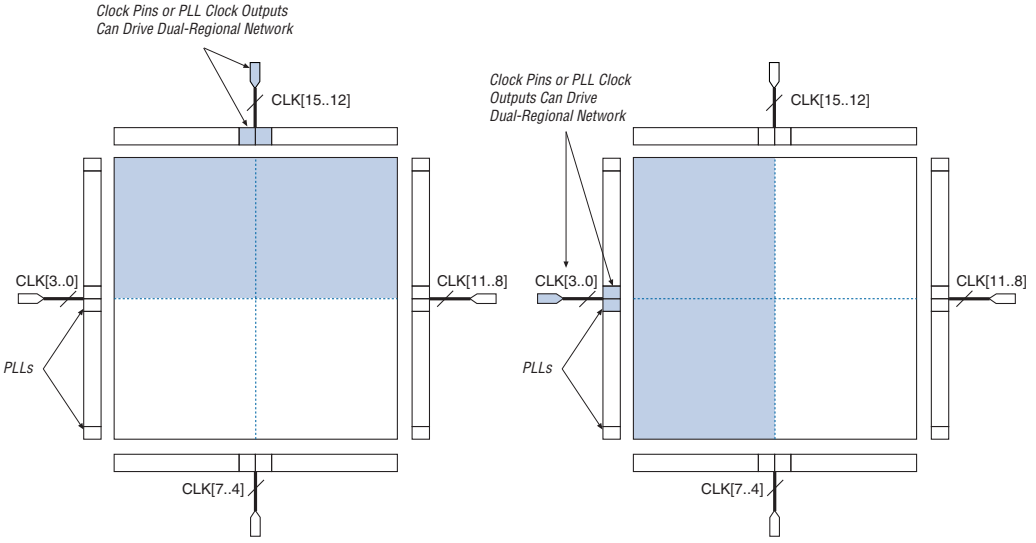

Combined Resources

Within each quadrant, there are 24 distinct dedicated clocking resources consisting of 16 global clock lines and eight regional clock lines. Multiplexers are used with these clocks to form busses to drive LAB row clocks, column IOE clocks, or row IOE clocks. Another multiplexer is used at the LAB level to select three of the six row clocks to feed the ALM registers in the LAB (see Figure 2–34).

Figure 2–34. Hierarchical Clock Networks Per Quadrant

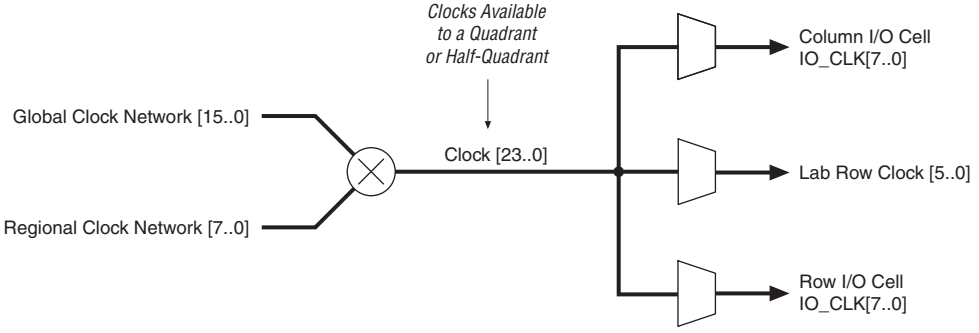

IOE clocks have row and column block regions that are clocked by eight I/O clock signals chosen from the 24 quadrant clock resources. Figures 2–35 and 2–36 show the quadrant relationship to the I/O clock regions.

Figure 2–35. EP2S15 & EP2S30 Device I/O Clock Groups

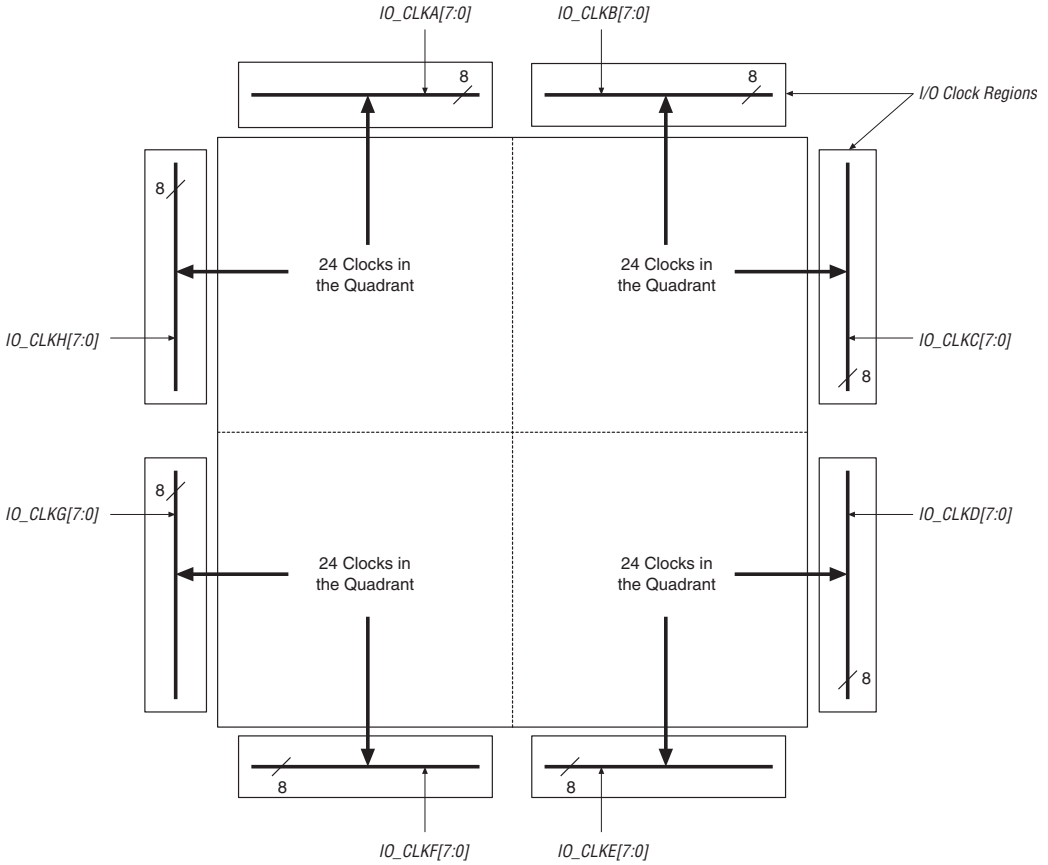

Figure 2–36. EP2S60, EP2S90, EP2S130 & EP2S180 Device I/O Clock Groups

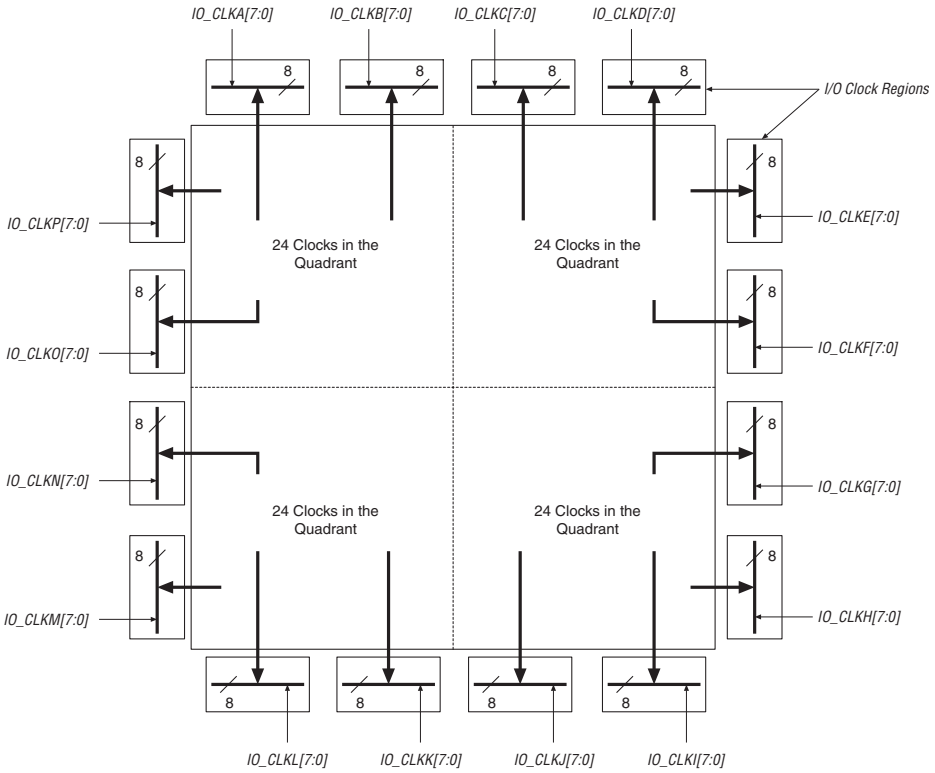

You can use the Quartus II software to control whether a clock input pin drives either a global, regional, or dual-regional clock network. The Quartus II software automatically selects the clocking resources if not specified.

Clock Control Block

Each global clock, regional clock, and PLL external clock output has its own clock control block. The control block has two functions:

- Clock source selection (dynamic selection for global clocks)
- Clock power-down (dynamic clock enable/disable)

When using the global or regional clock control blocks in Stratix II devices to select between multiple clocks or to enable and disable clock networks, be aware of possible narrow pulses or glitches when switching from one clock signal to another. A glitch or runt pulse has a width that is less than the width of the highest frequency input clock signal. To prevent logic errors within the FPGA, Altera recommends that you build circuits that filter out glitches and runt pulses.

Figures 2–37 through 2–39 show the clock control block for the global clock, regional clock, and PLL external clock output, respectively.

Figure 2–37. Global Clock Control Blocks

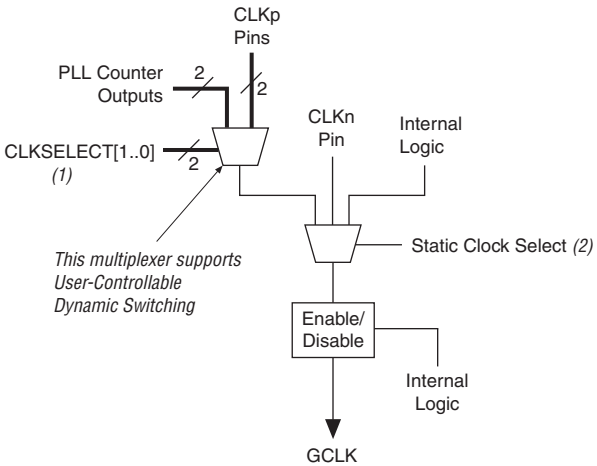

Notes to Figure 2–37:

(1) These clock select signals can be dynamically controlled through internal logic when the device is operating in user mode.

(2) These clock select signals can only be set through a configuration file (**.sof** or **.pof**) and cannot be dynamically controlled during user mode operation.

Figure 2–38. Regional Clock Control Blocks

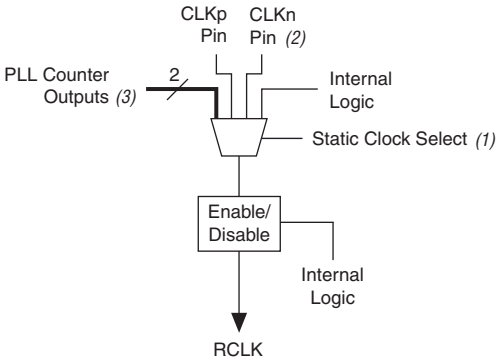

Notes to Figure 2–38:

(1) These clock select signals can only be set through a configuration file (**.sof** or **.pof**) and cannot be dynamically controlled during user mode operation.

(2) Only the CLKn pins on the top and bottom of the device feed to regional clock select blocks.The clock outputs from corner PLLs cannot be dynamically selected through the global clock control block.

(3) The clock outputs from corner PLLs cannot be dynamically selected through the global clock control block.

Figure 2–39. External PLL Output Clock Control Blocks

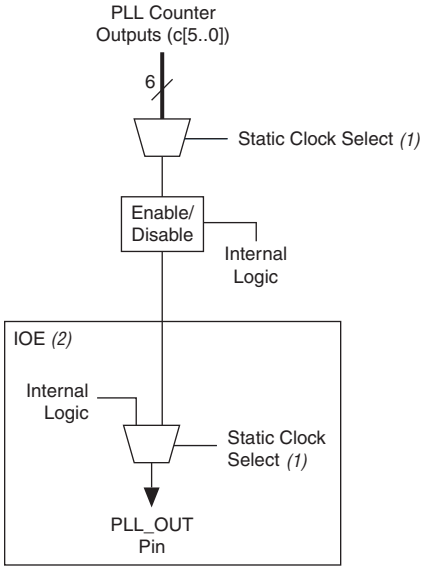

Notes to Figure 2–39:

(1) These clock select signals can only be set through a configuration file (**.sof** or **.pof**) and cannot be dynamically controlled during user mode operation.

(2) The clock control block feeds to a multiplexer within the PLL_OUT pin's IOE. The PLL_OUT pin is a dual-purpose pin. Therefore, this multiplexer selects either an internal signal or the output of the clock control block.

For the global clock control block, the clock source selection can be controlled either statically or dynamically. The user has the option of statically selecting the clock source by using the Quartus II software to set specific configuration bits in the configuration file (**.sof** or **.pof**) or the user can control the selection dynamically by using internal logic to drive the multiplexor select inputs. When selecting statically, the clock source can be set to any of the inputs to the select multiplexor. When selecting the clock source dynamically, you can either select between two PLL outputs (such as the C0 or C1 outputs from one PLL), between two PLLs (such as the C0/C1 clock output of one PLL or the C0/C1 c1ock output of the other PLL), between two clock pins (such as CLK0 or CLK1), or between a combination of clock pins or PLL outputs. The clock outputs from corner PLLs cannot be dynamically selected through the global control block.

For the regional and PLL_OUT clock control block, the clock source selection can only be controlled statically using configuration bits. Any of the inputs to the clock select multiplexor can be set as the clock source.

The Stratix II clock networks can be disabled (powered down) by both static and dynamic approaches. When a clock net is powered down, all the logic fed by the clock net is in an off-state thereby reducing the overall power consumption of the device.

The global and regional clock networks can be powered down statically through a setting in the configuration (**.sof** or **.pof**) file. Clock networks that are not used are automatically powered down through configuration bit settings in the configuration file generated by the Quartus II software.

The dynamic clock enable/disable feature allows the internal logic to control power up/down synchronously on GCLK and RCLK nets and PLL_OUT pins. This function is independent of the PLL and is applied directly on the clock network or PLL_OUT pin, as shown in Figures 2–37 through 2–39.



The following restrictions for the input clock pins apply:

- CLK0 pin -> inclk[0] of CLKCTRL
- CLK1 pin -> inclk[1] of CLKCTRL
- CLK2 pin -> inclk[0] of CLKCTRL
- CLK3 pin -> inclk[1] of CLKCTRL

In general, even CLK numbers connect to the inclk[0] port of CLKCTRL, and odd CLK numbers connect to the inclk[1] port of CLKCTRL.

Failure to comply with these restrictions will result in a no-fit error.

Enhanced & Fast PLLs

Stratix II devices provide robust clock management and synthesis using up to four enhanced PLLs and eight fast PLLs. These PLLs increase performance and provide advanced clock interfacing and clock-frequency synthesis. With features such as clock switchover, spread-spectrum clocking, reconfigurable bandwidth, phase control, and reconfigurable phase shifting, the Stratix II device's enhanced PLLs provide you with complete control of clocks and system timing. The fast PLLs provide general purpose clocking with multiplication and phase shifting as well as high-speed outputs for high-speed differential I/O support. Enhanced and fast PLLs work together with the Stratix II high-speed I/O and advanced clock architecture to provide significant improvements in system performance and bandwidth.

The Quartus II software enables the PLLs and their features without requiring any external devices. Table 2–9 shows the PLLs available for each Stratix II device and their type.

Table 2–9. Stratix II Device PLL Availability

Device	Fast PLLs								Enhanced PLLs			
	1	2	3	4	7	8	9	10	5	6	11	12
EP2S15	✓	✓	✓	✓					✓	✓		
EP2S30	✓	✓	✓	✓					✓	✓		
EP2S60 *(1)*	✓	✓	✓	✓	✓	✓	✓	✓	✓	✓	✓	✓
EP2S90 *(2)*	✓	✓	✓	✓	✓	✓	✓	✓	✓	✓	✓	✓
EP2S130 *(3)*	✓	✓	✓	✓	✓	✓	✓	✓	✓	✓	✓	✓
EP2S180	✓	✓	✓	✓	✓	✓	✓	✓	✓	✓	✓	✓

Notes to Table 2–9:

(1) EP2S60 devices in the 1020-pin package contain 12 PLLs. EP2S60 devices in the 484-pin and 672-pin packages contain fast PLLs 1–4 and enhanced PLLs 5 and 6.

(2) EP2S90 devices in the 1020-pin and 1508-pin packages contain 12 PLLs. EP2S90 devices in the 484-pin and 780-pin packages contain fast PLLS 1–4 and enhanced PLLs 5 and 6.

(3) EP2S130 devices in the 1020-pin and 1508-pin packages contain 12PLLs. The EP2S130 device in the 780-pin package contains fast PLLs 1–4 and enhanced PLLs 5 and 6.

Table 2–10 shows the enhanced PLL and fast PLL features in Stratix II devices.

Table 2–10. Stratix II PLL Features

Feature	Enhanced PLL	Fast PLL
Clock multiplication and division	*m*/(*n* × post-scale counter) *(1)*	*m*/(*n* × post-scale counter) *(2)*
Phase shift	Down to 125-ps increments *(3)*, *(4)*	Down to 125-ps increments *(3)*, *(4)*
Clock switchover	✓	✓ *(5)*
PLL reconfiguration	✓	✓
Reconfigurable bandwidth	✓	✓
Spread spectrum clocking	✓	
Programmable duty cycle	✓	✓
Number of internal clock outputs	6	4
Number of external clock outputs	Three differential/six single-ended	*(6)*
Number of feedback clock inputs	One single-ended or differential *(7)*, *(8)*	

Notes to Table 2–10:

(1) For enhanced PLLs, *m* ranges from 1 to 256, while *n* and post-scale counters range from 1 to 512 with 50% duty cycle.
(2) For fast PLLs, *m*, and post-scale counters range from 1 to 32. The *n* counter ranges from 1 to 4.
(3) The smallest phase shift is determined by the voltage controlled oscillator (VCO) period divided by 8.
(4) For degree increments, Stratix II devices can shift all output frequencies in increments of at least 45. Smaller degree increments are possible depending on the frequency and divide parameters.
(5) Stratix II fast PLLs only support manual clock switchover.
(6) Fast PLLs can drive to any I/O pin as an external clock. For high-speed differential I/O pins, the device uses a data channel to generate txclkout.
(7) If the feedback input is used, you lose one (or two, if FBIN is differential) external clock output pin.
(8) Every Stratix II device has at least two enhanced PLLs with one single-ended or differential external feedback input per PLL.

Figure 2–40 shows a top-level diagram of the Stratix II device and PLL floorplan.

Figure 2–40. PLL Locations

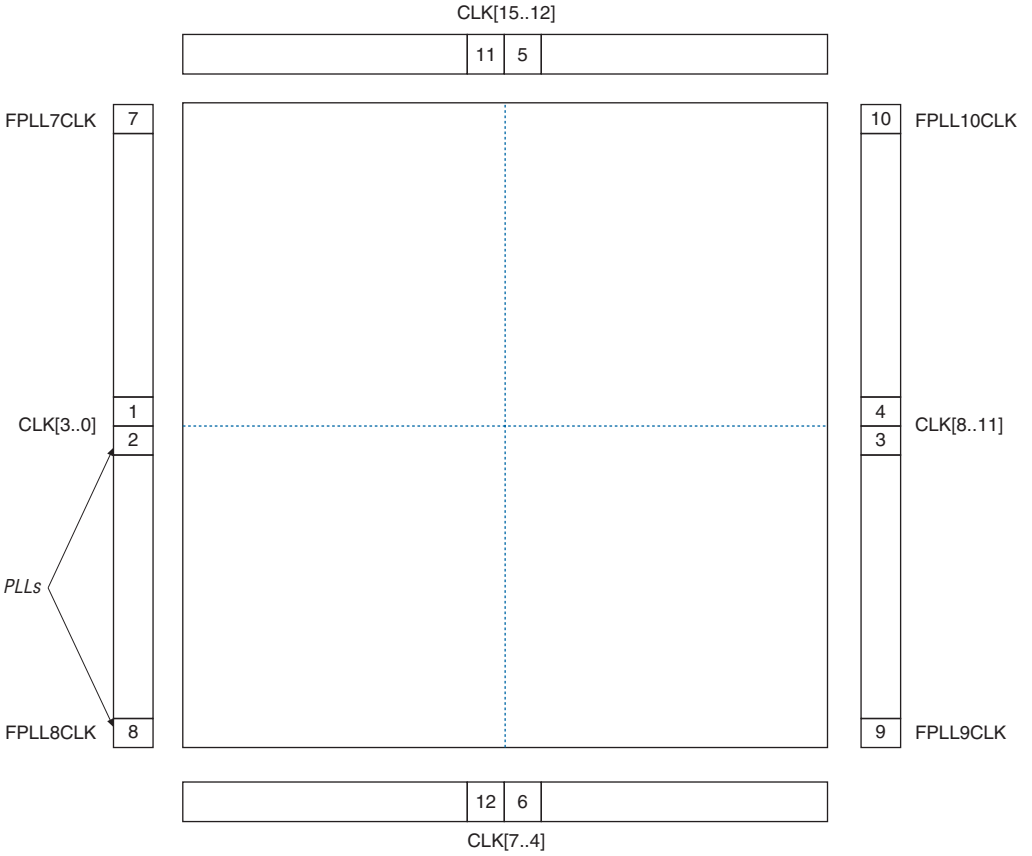

Figures 2–41 and 2–42 shows the global and regional clocking from the fast PLL outputs and the side clock pins.

Figure 2–41. Global & Regional Clock Connections from Center Clock Pins & Fast PLL Outputs *Note (1)*

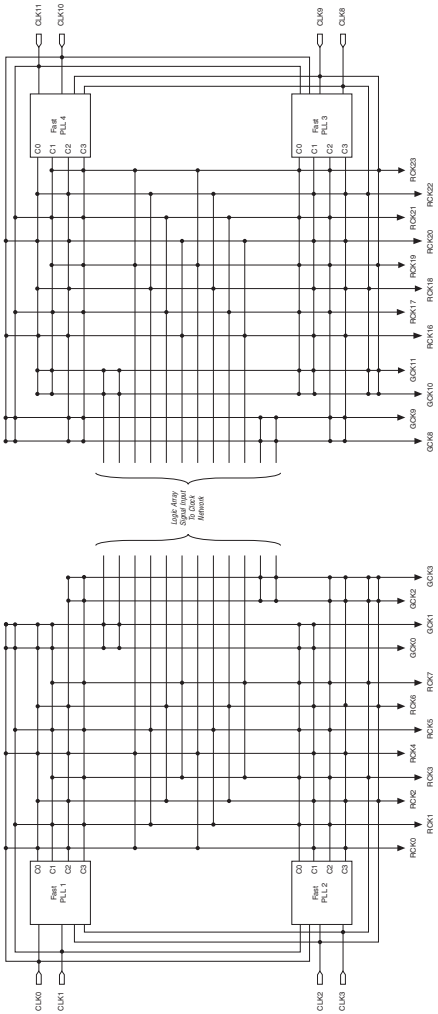

Notes to Figure 2–41:

(1) EP2S15 and EP2S30 devices only have four fast PLLs (1, 2, 3, and 4), but the connectivity from these four PLLs to the global and regional clock networks remains the same as shown.

(2) The global or regional clocks in a fast PLL's quadrant can drive the fast PLL input. The global or regional clock input can be driven by an output from another PLL, a pin-driven dedicated global or regional clock, or through a clock control block, provided the clock control block is fed by an output from another PLL or a pin-driven dedicated global or regional clock. An internally generated global signal cannot drive the PLL.

Figure 2–42. Global & Regional Clock Connections from Corner Clock Pins & Fast PLL Outputs *Note (1)*

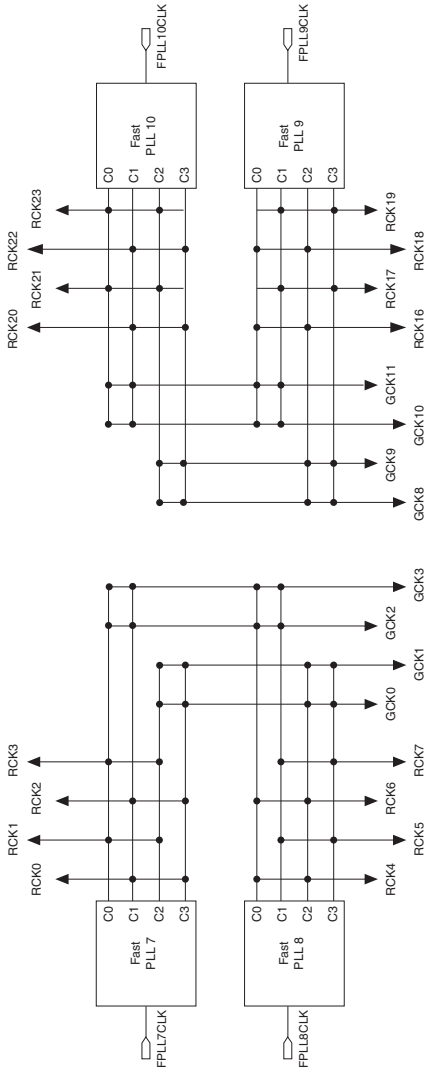

Note to Figure 2–42:

(1) The corner fast PLLs can also be driven through the global or regional clock networks. The global or regional clock input can be driven by an output from another PLL, a pin-driven dedicated global or regional clock, or through a clock control block, provided the clock control block is fed by an output from another PLL or a pin-driven dedicated global or regional clock. An internally generated global signal cannot drive the PLL.

Figure 2–43 shows the global and regional clocking from enhanced PLL outputs and top and bottom CLK pins. The connections to the global and regional clocks from the top clock pins and enhanced PLL outputs is shown in Table 2–11. The connections to the clocks from the bottom clock pins is shown in Table 2–12.

Figure 2–43. Global & Regional Clock Connections from Top & Bottom Clock Pins & Enhanced PLL Outputs Notes (1), (2), and (3)

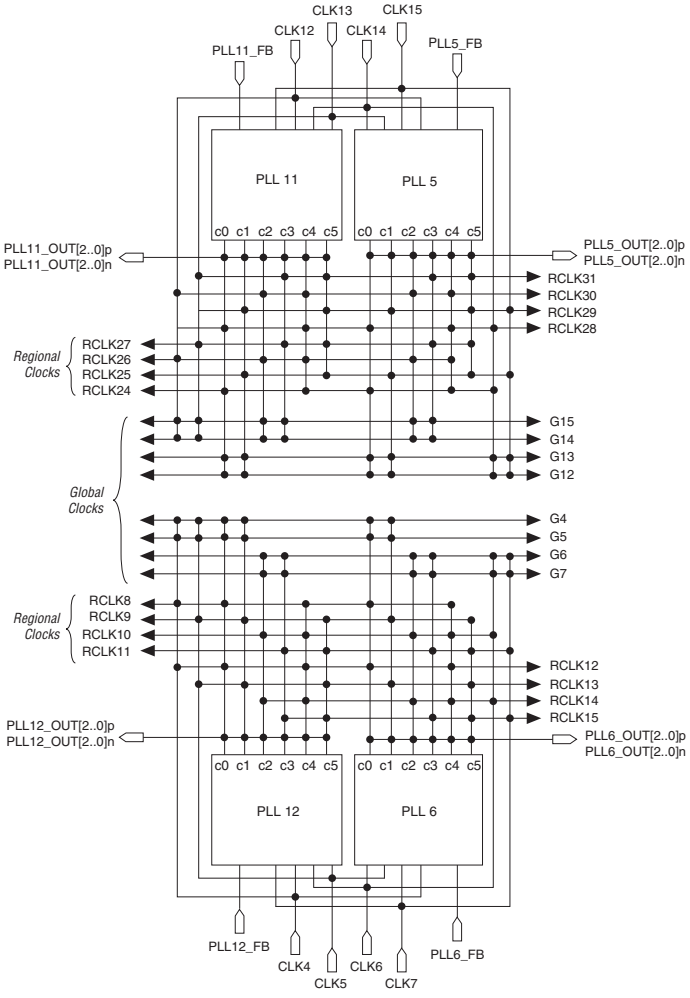

Notes to Figure 2–43:

(1) EP2S15 and EP2S30 devices only have two enhanced PLLs (5 and 6), but the connectivity from these two PLLs to the global and regional clock networks remains the same as shown.

(2) If the design uses the feedback input, you lose one (or two, if FBIN is differential) external clock output pin.

(3) The enhanced PLLs can also be driven through the global or regional clock netowrks. The global or regional clock input can be driven by an output from another PLL, a pin-driven dedicated global or regional clock, or through a clock control block provided the clock control block is fed by an output from another PLL or a pin-driven dedicated global or regional clock. An internally generated global signal cannot drive the PLL.

Table 2–11. Global & Regional Clock Connections from Top Clock Pins & Enhanced PLL Outputs (Part 1 of 2)

Top Side Global & Regional Clock Network Connectivity	DLLCLK	CLK12	CLK13	CLK14	CLK15	RCLK24	RCLK25	RCLK26	RCLK27	RCLK28	RCLK29	RCLK30	RCLK31
Clock pins													
CLK12p	✓	✓	✓			✓				✓			
CLK13p	✓	✓	✓				✓						✓
CLK14p	✓			✓	✓			✓				✓	
CLK15p	✓			✓	✓				✓		✓		
CLK12n		✓				✓				✓			
CLK13n			✓				✓						✓
CLK14n				✓				✓				✓	
CLK15n					✓				✓		✓		
Drivers from internal logic													
GCLKDRV0		✓											
GCLKDRV1			✓										
GCLKDRV2				✓									
GCLKDRV3					✓								
RCLKDRV0						✓				✓			
RCLKDRV1							✓				✓		
RCLKDRV2								✓				✓	
RCLKDRV3									✓				✓
RCLKDRV4						✓				✓			
RCLKDRV5							✓				✓		
RCLKDRV6								✓				✓	
RCLKDRV7									✓				✓
Enhanced PLL 5 outputs													
c0	✓	✓	✓			✓				✓			
c1	✓	✓	✓				✓				✓		
c2	✓			✓	✓			✓				✓	
c3	✓			✓	✓				✓				✓

Table 2–11. Global & Regional Clock Connections from Top Clock Pins & Enhanced PLL Outputs (Part 2 of 2)

Top Side Global & Regional Clock Network Connectivity	DLLCLK	CLK12	CLK13	CLK14	CLK15	RCLK24	RCLK25	RCLK26	RCLK27	RCLK28	RCLK29	RCLK30	RCLK31
c4	✓					✓		✓		✓		✓	
c5	✓						✓		✓		✓		✓
Enhanced PLL 11 outputs													
c0		✓	✓			✓				✓			
c1		✓	✓				✓				✓		
c2				✓	✓			✓				✓	
c3				✓	✓				✓				✓
c4						✓		✓		✓		✓	
c5							✓		✓		✓		✓

Table 2–12. Global & Regional Clock Connections from Bottom Clock Pins & Enhanced PLL Outputs (Part 1 of 2)

Bottom Side Global & Regional Clock Network Connectivity	DLLCLK	CLK4	CLK5	CLK6	CLK7	RCLK8	RCLK9	RCLK10	RCLK11	RCLK12	RCLK13	RCLK14	RCLK15
Clock pins													
CLK4p	✓	✓	✓			✓				✓			
CLK5p	✓	✓	✓				✓				✓		
CLK6p	✓			✓	✓			✓				✓	
CLK7p	✓			✓	✓				✓				✓
CLK4n		✓				✓				✓			
CLK5n			✓				✓				✓		
CLK6n				✓				✓				✓	
CLK7n					✓				✓				✓
Drivers from internal logic													
GCLKDRV0		✓											
GCLKDRV1			✓										
GCLKDRV2				✓									

Table 2–12. Global & Regional Clock Connections from Bottom Clock Pins & Enhanced PLL Outputs (Part 2 of 2)

Bottom Side Global & Regional Clock Network Connectivity	DLLCLK	CLK4	CLK5	CLK6	CLK7	RCLK8	RCLK9	RCLK10	RCLK11	RCLK12	RCLK13	RCLK14	RCLK15
GCLKDRV3					✓								
RCLKDRV0						✓				✓			
RCLKDRV1							✓				✓		
RCLKDRV2								✓				✓	
RCLKDRV3									✓				✓
RCLKDRV4						✓				✓			
RCLKDRV5							✓				✓		
RCLKDRV6								✓				✓	
RCLKDRV7									✓				✓
Enhanced PLL 6 outputs													
c0	✓	✓	✓			✓				✓			
c1	✓	✓	✓				✓				✓		
c2	✓			✓	✓			✓				✓	
c3	✓			✓	✓				✓				✓
c4	✓					✓		✓		✓		✓	
c5	✓						✓		✓		✓		✓
Enhanced PLL 12 outputs													
c0		✓	✓			✓				✓			
c1		✓	✓				✓				✓		
c2				✓	✓			✓				✓	
c3				✓	✓				✓				✓
c4						✓		✓		✓		✓	
c5							✓		✓		✓		✓

Enhanced PLLs

Stratix II devices contain up to four enhanced PLLs with advanced clock management features. Figure 2–44 shows a diagram of the enhanced PLL.

Figure 2–44. Stratix II Enhanced PLL *Note (1)*

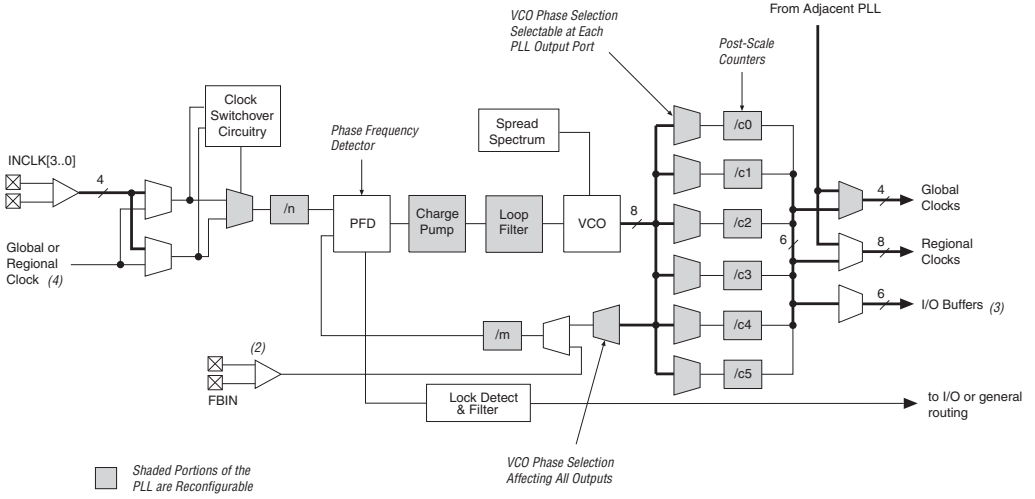

Notes to Figure 2–44:

(1) Each clock source can come from any of the four clock pins that are physically located on the same side of the device as the PLL.

(2) If the feedback input is used, you lose one (or two, if FBIN is differential) external clock output pin.

(3) Each enhanced PLL has three differential external clock outputs or six single-ended external clock outputs.

(4) The global or regional clock input can be driven by an output from another PLL, a pin-driven dedicated global or regional clock, or through a clock control block, provided the clock control block is fed by an output from another PLL or a pin-driven dedicated global or regional clock. An internally generated global signal cannot drive the PLL.

Fast PLLs

Stratix II devices contain up to eight fast PLLs with high-speed serial interfacing ability. Figure 2–45 shows a diagram of the fast PLL.

Figure 2–45. Stratix II Device Fast PLL *Notes (1), (2), (3)*

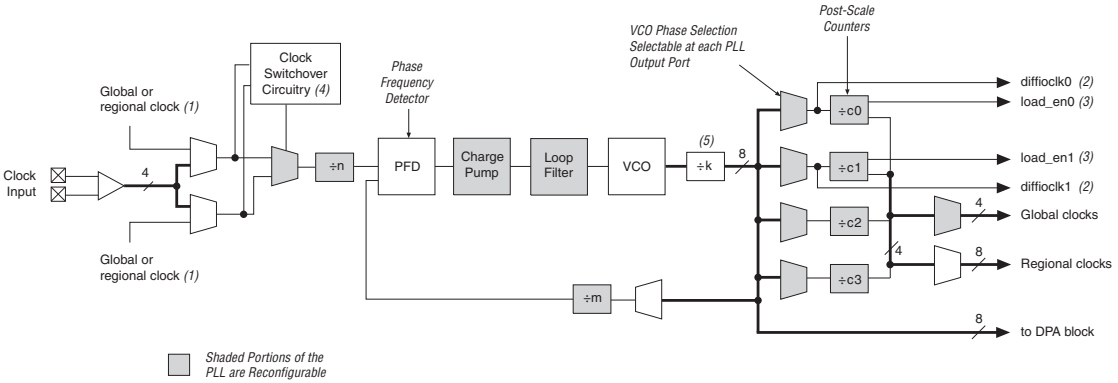

Notes to Figure 2–45:

(1) The global or regional clock input can be driven by an output from another PLL, a pin-driven dedicated global or regional clock, or through a clock control block, provided the clock control block is fed by an output from another PLL or a pin-driven dedicated global or regional clock. An internally generated global signal cannot drive the PLL.

(2) In high-speed differential I/O support mode, this high-speed PLL clock feeds the SERDES circuitry. Stratix II devices only support one rate of data transfer per fast PLL in high-speed differential I/O support mode.

(3) This signal is a differential I/O SERDES control signal.

(4) Stratix II fast PLLs only support manual clock switchover.

(5) If the design enables this ÷2 counter, then the device can use a VCO frequency range of 150 to 520 MHz.



See the *PLLs in Stratix II & Stratix II GX Devices* chapter in volume 2 of the *Stratix II Device Handbook* or the *Stratix II GX Device Handbook* for more information on enhanced and fast PLLs. See "High-Speed Differential I/O with DPA Support" on page 2–96 for more information on high-speed differential I/O support.

I/O Structure

The Stratix II IOEs provide many features, including:

- Dedicated differential and single-ended I/O buffers
- 3.3-V, 64-bit, 66-MHz PCI compliance
- 3.3-V, 64-bit, 133-MHz PCI-X 1.0 compliance
- Joint Test Action Group (JTAG) boundary-scan test (BST) support
- On-chip driver series termination
- On-chip parallel termination
- On-chip termination for differential standards
- Programmable pull-up during configuration

- Output drive strength control
- Tri-state buffers
- Bus-hold circuitry
- Programmable pull-up resistors
- Programmable input and output delays
- Open-drain outputs
- DQ and DQS I/O pins
- Double data rate (DDR) registers

The IOE in Stratix II devices contains a bidirectional I/O buffer, six registers, and a latch for a complete embedded bidirectional single data rate or DDR transfer. Figure 2–46 shows the Stratix II IOE structure. The IOE contains two input registers (plus a latch), two output registers, and two output enable registers. The design can use both input registers and the latch to capture DDR input and both output registers to drive DDR outputs. Additionally, the design can use the output enable (OE) register for fast clock-to-output enable timing. The negative edge-clocked OE register is used for DDR SDRAM interfacing. The Quartus II software automatically duplicates a single OE register that controls multiple output or bidirectional pins.

Figure 2–46. Stratix II IOE Structure

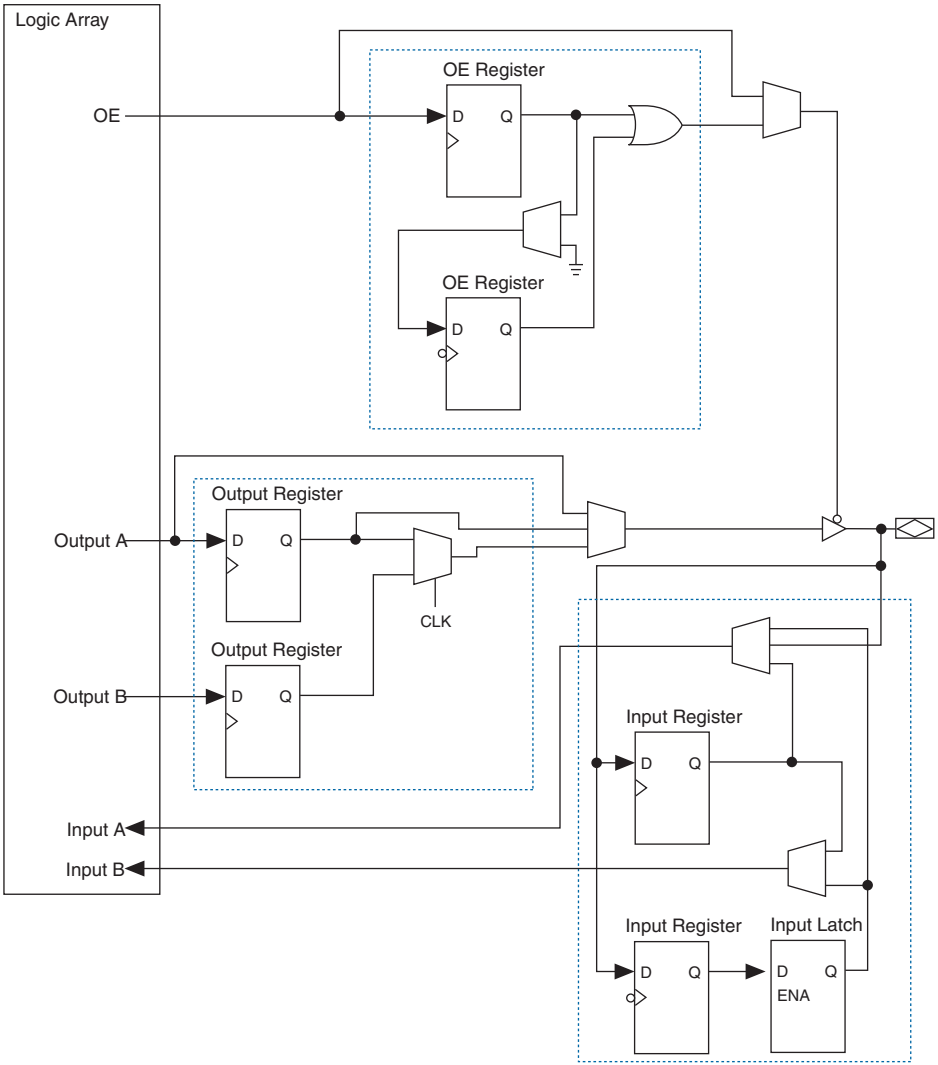

The IOEs are located in I/O blocks around the periphery of the Stratix II device. There are up to four IOEs per row I/O block and four IOEs per column I/O block. The row I/O blocks drive row, column, or direct link interconnects. The column I/O blocks drive column interconnects. Figure 2–47 shows how a row I/O block connects to the logic array. Figure 2–48 shows how a column I/O block connects to the logic array.

Figure 2–47. Row I/O Block Connection to the Interconnect *Note (1)*

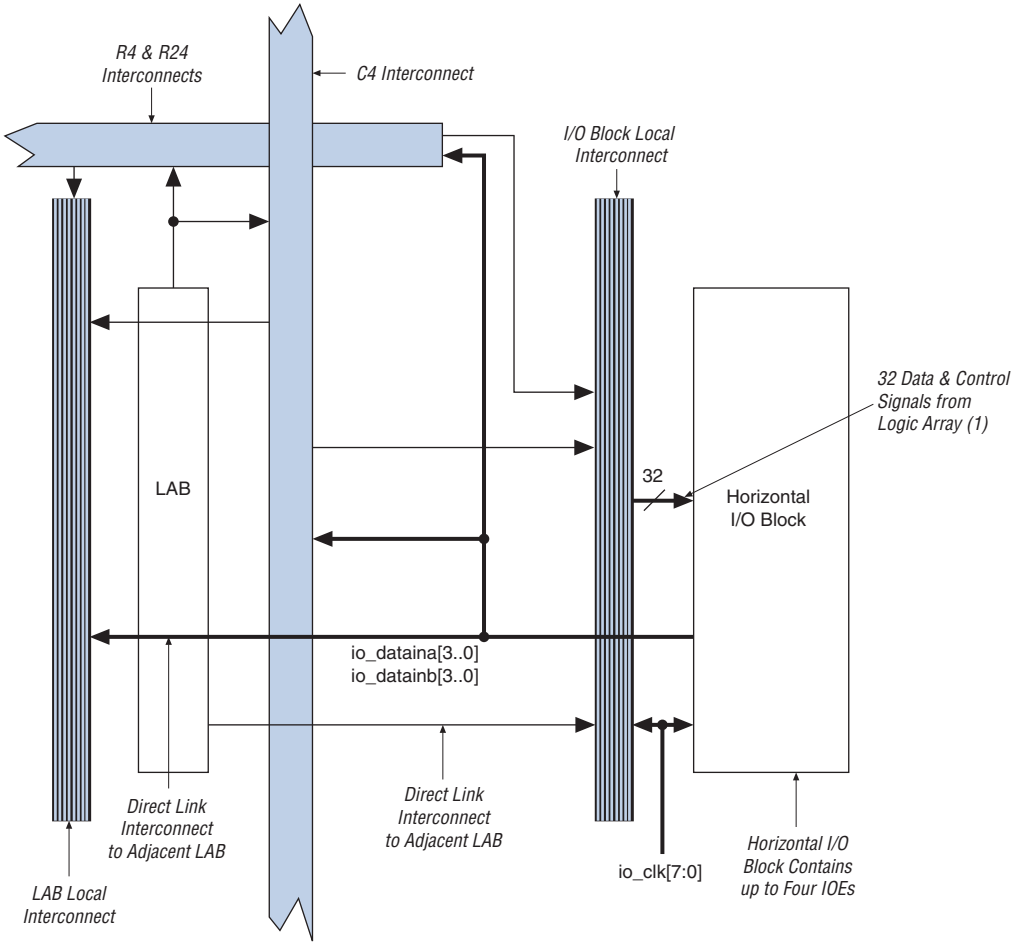

Note to Figure 2–47:

(1) The 32 data and control signals consist of eight data out lines: four lines each for DDR applications `io_dataouta[3..0]` and `io_dataoutb[3..0]`, four output enables `io_oe[3..0]`, four input clock enables `io_ce_in[3..0]`, four output clock enables `io_ce_out[3..0]`, four clocks `io_clk[3..0]`, four asynchronous clear and preset signals `io_aclr/apreset[3..0]`, and four synchronous clear and preset signals `io_sclr/spreset[3..0]`.

Figure 2–48. Column I/O Block Connection to the Interconnect *Note (1)*

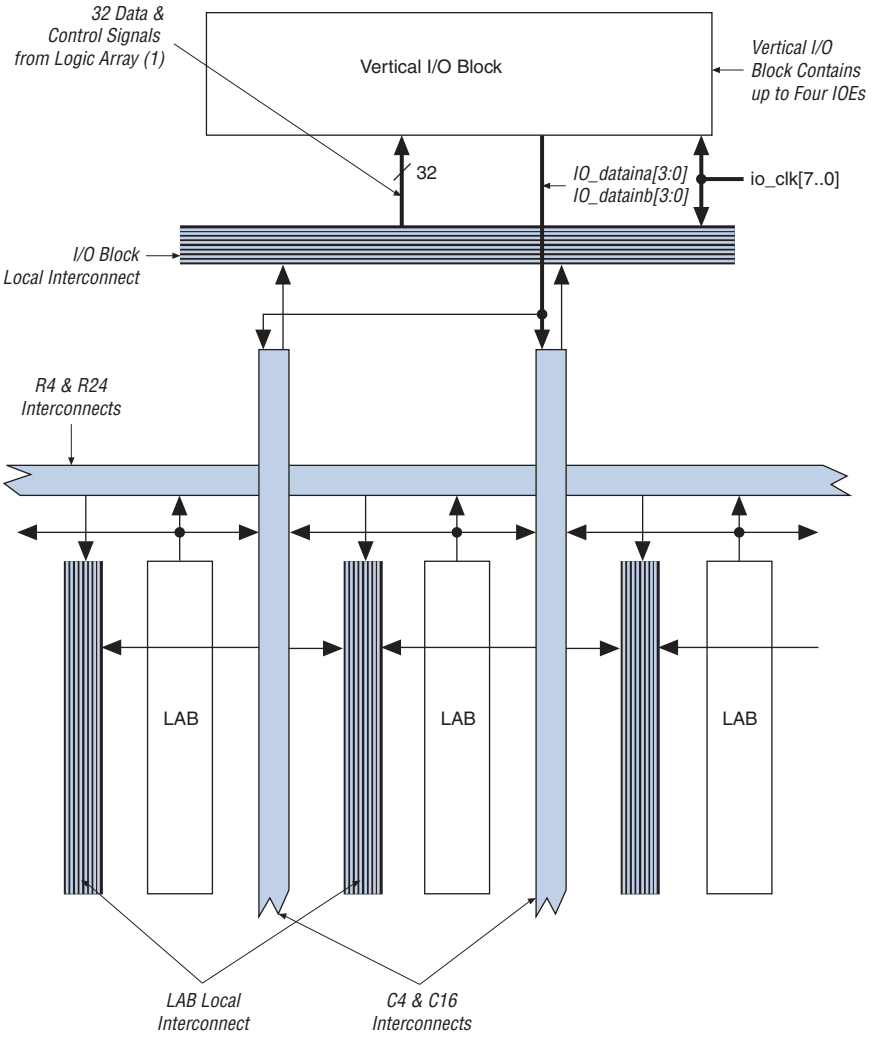

Note to Figure 2–48:

(1) The 32 data and control signals consist of eight data out lines: four lines each for DDR applications `io_dataouta[3..0]` and `io_dataoutb[3..0]`, four output enables `io_oe[3..0]`, four input clock enables `io_ce_in[3..0]`, four output clock enables `io_ce_out[3..0]`, four clocks `io_clk[3..0]`, four asynchronous clear and preset signals `io_aclr/apreset[3..0]`, and four synchronous clear and preset signals `io_sclr/spreset[3..0]`.

There are 32 control and data signals that feed each row or column I/O block. These control and data signals are driven from the logic array. The row or column IOE clocks, `io_clk[7..0]`, provide a dedicated routing resource for low-skew, high-speed clocks. I/O clocks are generated from global or regional clocks (see the "PLLs & Clock Networks" section). Figure 2–49 illustrates the signal paths through the I/O block.

Figure 2–49. Signal Path through the I/O Block

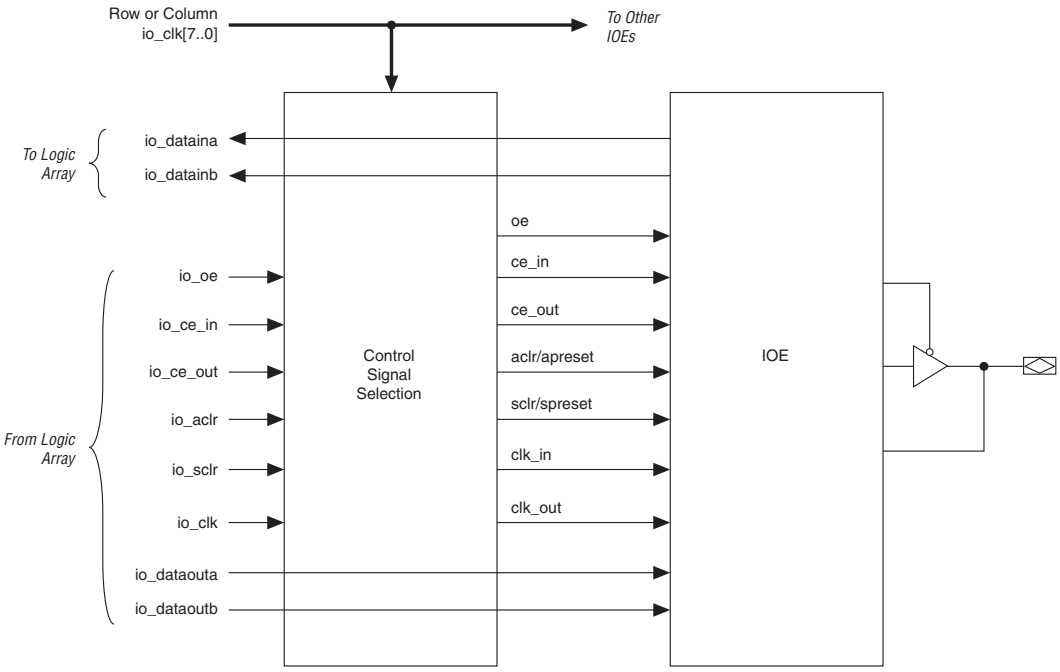

Each IOE contains its own control signal selection for the following control signals: `oe`, `ce_in`, `ce_out`, `aclr/apreset`, `sclr/spreset`, `clk_in`, and `clk_out`. Figure 2–50 illustrates the control signal selection.

Figure 2–50. Control Signal Selection per IOE

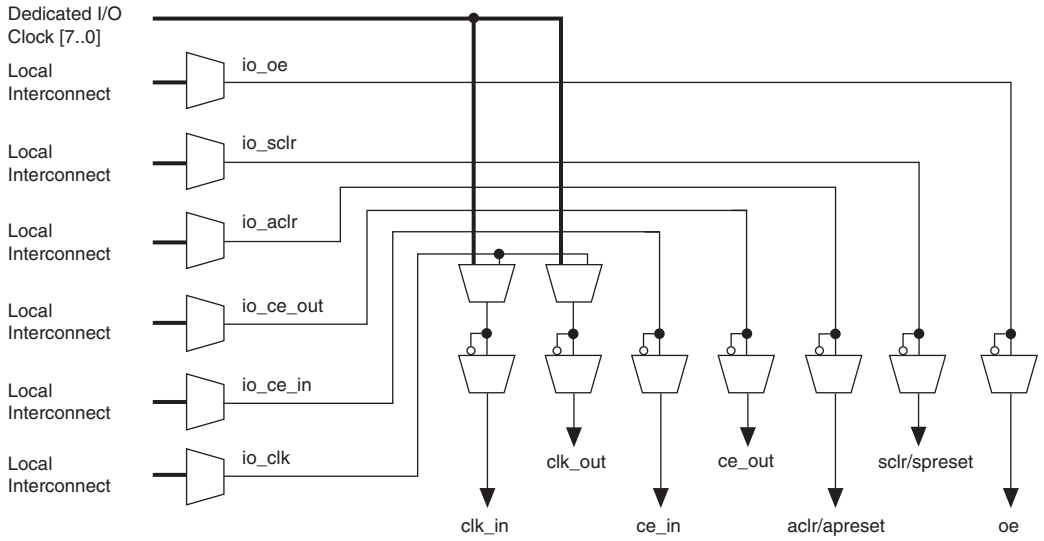

Notes to Figure 2–50:

(1) Control signals `ce_in`, `ce_out`, `aclr/apreset`, `sclr/spreset`, and `oe` can be global signals even though their control selection multiplexers are not directly fed by the `ioe_clk[7..0]` signals. The `ioe_clk` signals can drive the I/O local interconnect, which then drives the control selection multiplexers.

In normal bidirectional operation, the input register can be used for input data requiring fast setup times. The input register can have its own clock input and clock enable separate from the OE and output registers. The output register can be used for data requiring fast clock-to-output performance. The OE register can be used for fast clock-to-output enable timing. The OE and output register share the same clock source and the same clock enable source from local interconnect in the associated LAB, dedicated I/O clocks, and the column and row interconnects.

Figure 2–51 shows the IOE in bidirectional configuration.

Figure 2–51. Stratix II IOE in Bidirectional I/O Configuration *Note (1)*

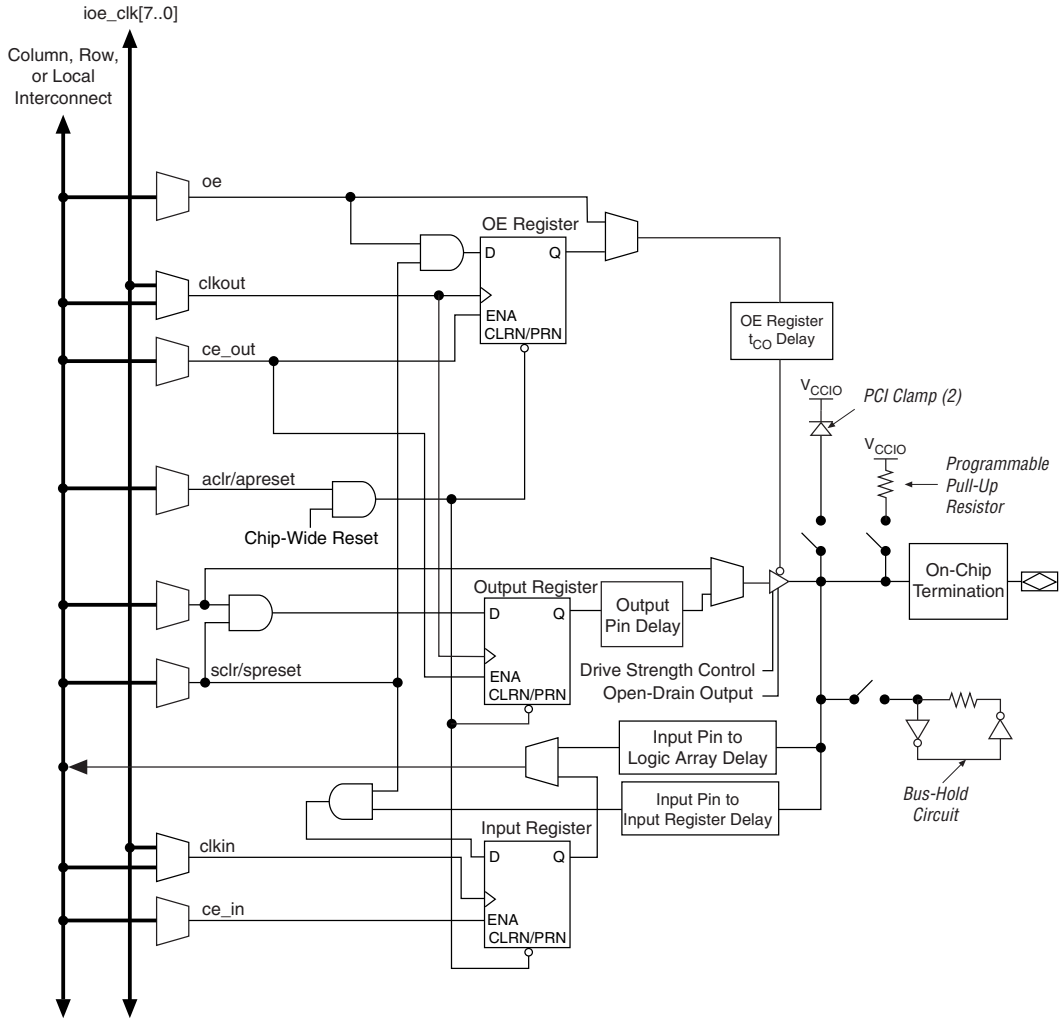

Notes to Figure 2–51:

(1) All input signals to the IOE can be inverted at the IOE.

(2) The optional PCI clamp is only available on column I/O pins.

The Stratix II device IOE includes programmable delays that can be activated to ensure input IOE register-to-logic array register transfers, input pin-to-logic array register transfers, or output IOE register-to-pin transfers.

A path in which a pin directly drives a register may require the delay to ensure zero hold time, whereas a path in which a pin drives a register through combinational logic may not require the delay. Programmable delays exist for decreasing input-pin-to-logic-array and IOE input register delays. The Quartus II Compiler can program these delays to automatically minimize setup time while providing a zero hold time. Programmable delays can increase the register-to-pin delays for output and/or output enable registers. Programmable delays are no longer required to ensure zero hold times for logic array register-to-IOE register transfers. The Quartus II Compiler can create the zero hold time for these transfers. Table 2–13 shows the programmable delays for Stratix II devices.

Table 2–13. Stratix II Programmable Delay Chain

Programmable Delays	Quartus II Logic Option
Input pin to logic array delay	Input delay from pin to internal cells
Input pin to input register delay	Input delay from pin to input register
Output pin delay	Delay from output register to output pin
Output enable register t_{CO} delay	Delay to output enable pin

The IOE registers in Stratix II devices share the same source for clear or preset. You can program preset or clear for each individual IOE. You can also program the registers to power up high or low after configuration is complete. If programmed to power up low, an asynchronous clear can control the registers. If programmed to power up high, an asynchronous preset can control the registers. This feature prevents the inadvertent activation of another device's active-low input upon power-up. If one register in an IOE uses a preset or clear signal then all registers in the IOE must use that same signal if they require preset or clear. Additionally, a synchronous reset signal is available for the IOE registers.

Double Data Rate I/O Pins

Stratix II devices have six registers in the IOE, which support DDR interfacing by clocking data on both positive and negative clock edges. The IOEs in Stratix II devices support DDR inputs, DDR outputs, and bidirectional DDR modes.

When using the IOE for DDR inputs, the two input registers clock double rate input data on alternating edges. An input latch is also used in the IOE for DDR input acquisition. The latch holds the data that is present during the clock high times. This allows both bits of data to be synchronous with the same clock edge (either rising or falling). Figure 2–52 shows an IOE configured for DDR input. Figure 2–53 shows the DDR input timing diagram.

Figure 2–52. Stratix II IOE in DDR Input I/O Configuration *Notes (1), (2), (3)*

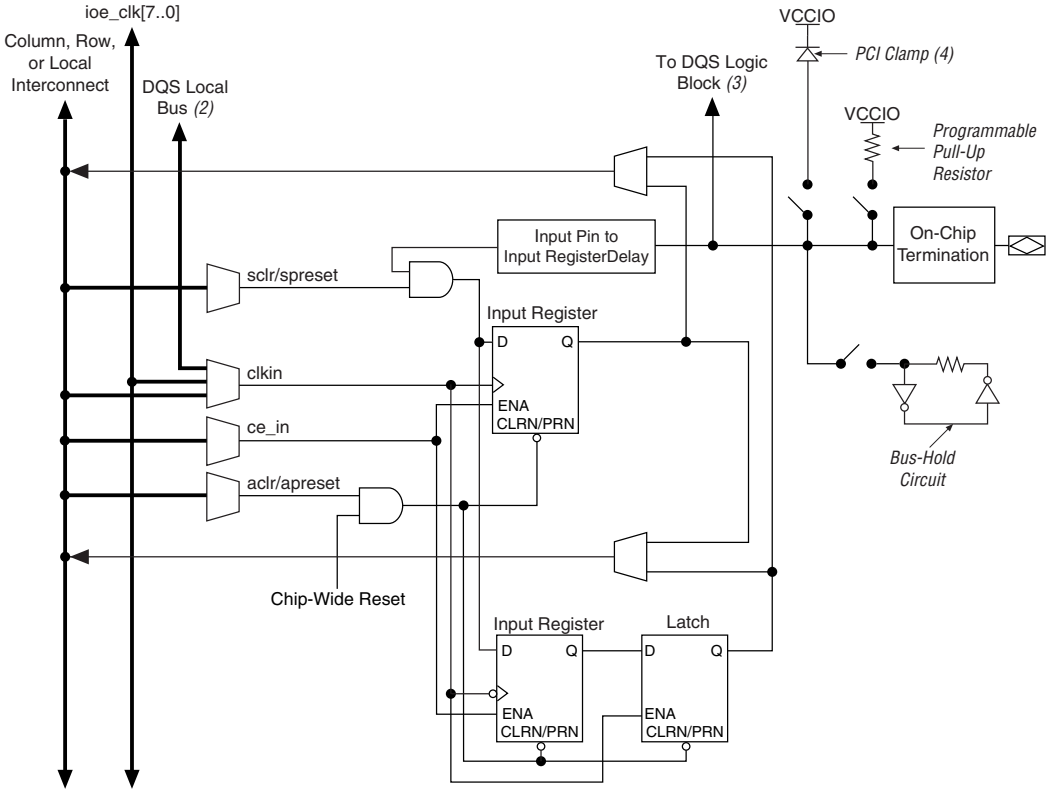

Notes to Figure 2–52:

(1) All input signals to the IOE can be inverted at the IOE.
(2) This signal connection is only allowed on dedicated DQ function pins.
(3) This signal is for dedicated DQS function pins only.
(4) The optional PCI clamp is only available on column I/O pins.

Figure 2–53. Input Timing Diagram in DDR Mode

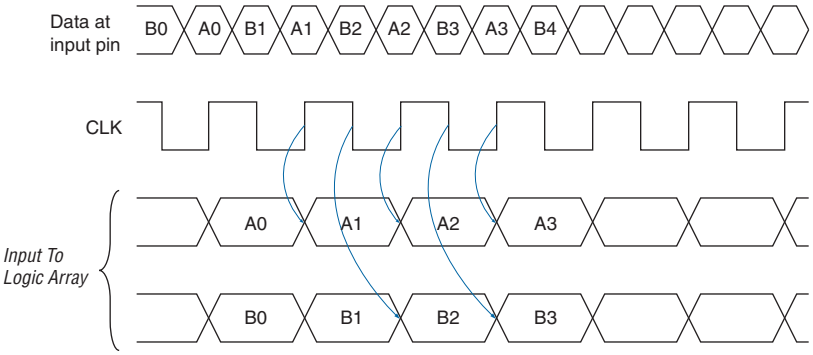

When using the IOE for DDR outputs, the two output registers are configured to clock two data paths from ALMs on rising clock edges. These output registers are multiplexed by the clock to drive the output pin at a ×2 rate. One output register clocks the first bit out on the clock high time, while the other output register clocks the second bit out on the clock low time. Figure 2–54 shows the IOE configured for DDR output. Figure 2–55 shows the DDR output timing diagram.

Figure 2–54. Stratix II IOE in DDR Output I/O Configuration *Notes (1), (2)*

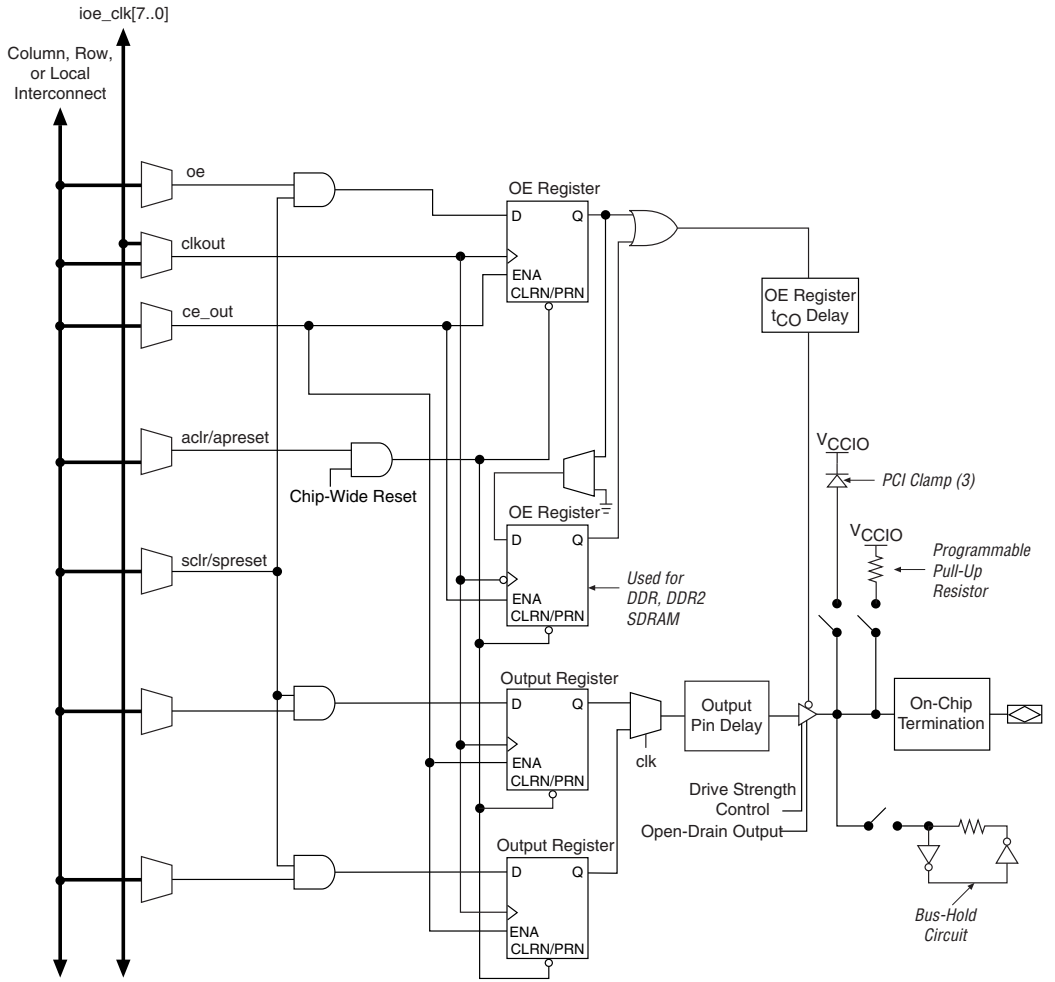

Notes to Figure 2–54:

(1) All input signals to the IOE can be inverted at the IOE.

(2) The tri-state buffer is active low. The DDIO megafunction represents the tri-state buffer as active-high with an inverter at the OE register data port. Similarly, the `aclr` and `apreset` signals are also active-high at the input ports of the DDIO megafunction.

(3) The optional PCI clamp is only available on column I/O pins.

Figure 2–55. Output TIming Diagram in DDR Mode

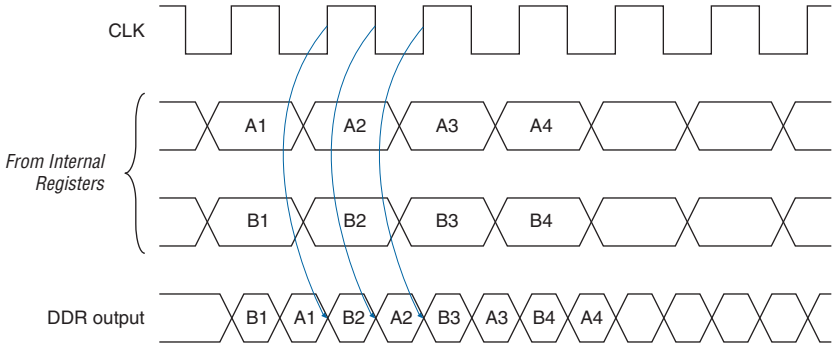

The Stratix II IOE operates in bidirectional DDR mode by combining the DDR input and DDR output configurations. The negative-edge-clocked OE register holds the OE signal inactive until the falling edge of the clock. This is done to meet DDR SDRAM timing requirements.

External RAM Interfacing

In addition to the six I/O registers in each IOE, Stratix II devices also have dedicated phase-shift circuitry for interfacing with external memory interfaces. Stratix II devices support DDR and DDR2 SDRAM, QDR II SRAM, RLDRAM II, and SDR SDRAM memory interfaces. In every Stratix II device, the I/O banks at the top (banks 3 and 4) and bottom (banks 7 and 8) of the device support DQ and DQS signals with DQ bus modes of ×4, ×8/×9, ×16/×18, or ×32/×36. Table 2–14 shows the number of DQ and DQS buses that are supported per device.

Table 2–14. DQS & DQ Bus Mode Support (Part 1 of 2) *Note (1)*

Device	Package	Number of ×4 Groups	Number of ×8/×9 Groups	Number of ×16/×18 Groups	Number of ×32/×36 Groups
EP2S15	484-pin FineLine BGA	8	4	0	0
	672-pin FineLine BGA	18	8	4	0
EP2S30	484-pin FineLine BGA	8	4	0	0
	672-pin FineLine BGA	18	8	4	0
EP2S60	484-pin FineLine BGA	8	4	0	0
	672-pin FineLine BGA	18	8	4	0
	1,020-pin FineLine BGA	36	18	8	4

Table 2–14. DQS & DQ Bus Mode Support (Part 2 of 2) *Note (1)*

Device	Package	Number of ×4 Groups	Number of ×8/×9 Groups	Number of ×16/×18 Groups	Number of ×32/×36 Groups
EP2S90	484-pin Hybrid FineLine BGA	8	4	0	0
	780-pin FineLine BGA	18	8	4	0
	1,020-pin FineLine BGA	36	18	8	4
	1,508-pin FineLine BGA	36	18	8	4
EP2S130	780-pin FineLine BGA	18	8	4	0
	1,020-pin FineLine BGA	36	18	8	4
	1,508-pin FineLine BGA	36	18	8	4
EP2S180	1,020-pin FineLine BGA	36	18	8	4
	1,508-pin FineLine BGA	36	18	8	4

Notes to Table 2–14:
(1) Check the pin table for each DQS/DQ group in the different modes.

A compensated delay element on each DQS pin automatically aligns input DQS synchronization signals with the data window of their corresponding DQ data signals. The DQS signals drive a local DQS bus in the top and bottom I/O banks. This DQS bus is an additional resource to the I/O clocks and is used to clock DQ input registers with the DQS signal.

The Stratix II device has two phase-shifting reference circuits, one on the top and one on the bottom of the device. The circuit on the top controls the compensated delay elements for all DQS pins on the top. The circuit on the bottom controls the compensated delay elements for all DQS pins on the bottom.

Each phase-shifting reference circuit is driven by a system reference clock, which must have the same frequency as the DQS signal. Clock pins `CLK[15..12]p` feed the phase circuitry on the top of the device and clock pins `CLK[7..4]p` feed the phase circuitry on the bottom of the device. In addition, PLL clock outputs can also feed the phase-shifting reference circuits.

Figure 2–56 illustrates the phase-shift reference circuit control of each DQS delay shift on the top of the device. This same circuit is duplicated on the bottom of the device.

Figure 2–56. DQS Phase-Shift Circuitry *Notes (1), (2), (3), (4)*

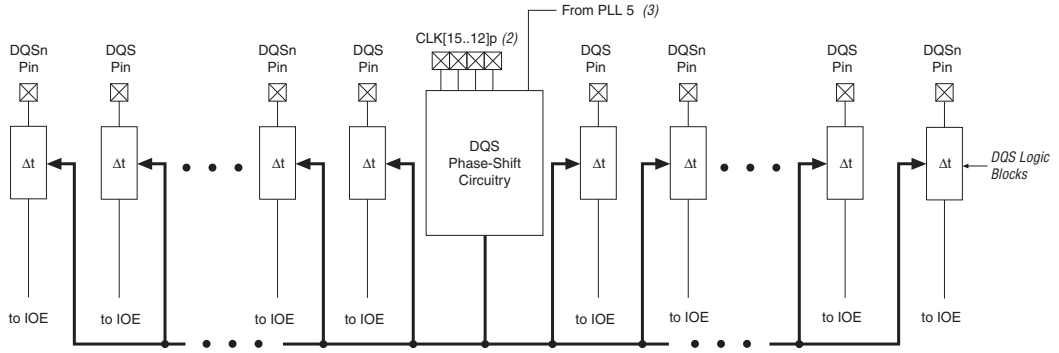

Notes to Figure 2–56:

(1) There are up to 18 pairs of DQS and DQSn pins available on the top or the bottom of the Stratix II device. There are up to 10 pairs on the right side and 8 pairs on the left side of the DQS phase-shift circuitry.

(2) The Δt module represents the DQS logic block.

(3) Clock pins `CLK[15..12]p` feed the phase-shift circuitry on the top of the device and clock pins `CLK[7..4]p` feed the phase circuitry on the bottom of the device. You can also use a PLL clock output as a reference clock to the phase-shift circuitry.

(4) You can only use PLL 5 to feed the DQS phase-shift circuitry on the top of the device and PLL 6 to feed the DQS phase-shift circuitry on the bottom of the device.

These dedicated circuits combined with enhanced PLL clocking and phase-shift ability provide a complete hardware solution for interfacing to high-speed memory.

For more information on external memory interfaces, refer to the *External Memory Interfaces in Stratix II & Stratix II GX Devices* chapter in volume 2 of the *Stratix II Device Handbook* or the *Stratix II GX Device Handbook*.

Programmable Drive Strength

The output buffer for each Stratix II device I/O pin has a programmable drive strength control for certain I/O standards. The LVTTL, LVCMOS, SSTL, and HSTL standards have several levels of drive strength that the user can control. The default setting used in the Quartus II software is the maximum current strength setting that is used to achieve maximum I/O performance. For all I/O standards, the minimum setting is the lowest drive strength that guarantees the I_{OH}/I_{OL} of the standard. Using minimum settings provides signal slew rate control to reduce system noise and signal overshoot.

Table 2–15 shows the possible settings for the I/O standards with drive strength control.

Table 2–15. Programmable Drive Strength *Note (1)*

I/O Standard	I_{OH} / I_{OL} Current Strength Setting (mA) for Column I/O Pins	I_{OH} / I_{OL} Current Strength Setting (mA) for Row I/O Pins
3.3-V LVTTL	24, 20, 16, 12, 8, 4	12, 8, 4
3.3-V LVCMOS	24, 20, 16, 12, 8, 4	8, 4
2.5-V LVTTL/LVCMOS	16, 12, 8, 4	12, 8, 4
1.8-V LVTTL/LVCMOS	12, 10, 8, 6, 4, 2	8, 6, 4, 2
1.5-V LVCMOS	8, 6, 4, 2	4, 2
SSTL-2 Class I	12, 8	12, 8
SSTL-2 Class II	24, 20, 16	16
SSTL-18 Class I	12, 10, 8, 6, 4	10, 8, 6, 4
SSTL-18 Class II	20, 18, 16, 8	-
HSTL-18 Class I	12, 10, 8, 6, 4	12, 10, 8, 6, 4
HSTL-18 Class II	20, 18, 16	-
HSTL-15 Class I	12, 10, 8, 6, 4	8, 6, 4
HSTL-15 Class II	20, 18, 16	-

Note to Table 2–15:

(1) The Quartus II software default current setting is the maximum setting for each I/O standard.

Open-Drain Output

Stratix II devices provide an optional open-drain (equivalent to an open-collector) output for each I/O pin. This open-drain output enables the device to provide system-level control signals (e.g., interrupt and write-enable signals) that can be asserted by any of several devices.

Bus Hold

Each Stratix II device I/O pin provides an optional bus-hold feature. The bus-hold circuitry can weakly hold the signal on an I/O pin at its last-driven state. Since the bus-hold feature holds the last-driven state of the pin until the next input signal is present, you do not need an external pull-up or pull-down resistor to hold a signal level when the bus is tri-stated.

The bus-hold circuitry also pulls undriven pins away from the input threshold voltage where noise can cause unintended high-frequency switching. You can select this feature individually for each I/O pin. The bus-hold output drives no higher than V_{CCIO} to prevent overdriving signals. If the bus-hold feature is enabled, the programmable pull-up option cannot be used. Disable the bus-hold feature when the I/O pin has been configured for differential signals.

The bus-hold circuitry uses a resistor with a nominal resistance (R_{BH}) of approximately 7 kΩ to weakly pull the signal level to the last-driven state. See the *DC & Switching Characteristics* chapter in the *Stratix II Device Handbook, Volume 1*, for the specific sustaining current driven through this resistor and overdrive current used to identify the next-driven input level. This information is provided for each V_{CCIO} voltage level.

The bus-hold circuitry is active only after configuration. When going into user mode, the bus-hold circuit captures the value on the pin present at the end of configuration.

Programmable Pull-Up Resistor

Each Stratix II device I/O pin provides an optional programmable pull-up resistor during user mode. If you enable this feature for an I/O pin, the pull-up resistor (typically 25 kΩ) weakly holds the output to the V_{CCIO} level of the output pin's bank.

Programmable pull-up resistors are only supported on user I/O pins, and are not supported on dedicated configuration pins, JTAG pins or dedicated clock pins.

Advanced I/O Standard Support

Stratix II device IOEs support the following I/O standards:

- 3.3-V LVTTL/LVCMOS
- 2.5-V LVTTL/LVCMOS
- 1.8-V LVTTL/LVCMOS
- 1.5-V LVCMOS
- 3.3-V PCI
- 3.3-V PCI-X mode 1
- LVDS
- LVPECL (on input and output clocks only)
- HyperTransport technology
- Differential 1.5-V HSTL Class I and II
- Differential 1.8-V HSTL Class I and II
- Differential SSTL-18 Class I and II
- Differential SSTL-2 Class I and II

- 1.5-V HSTL Class I and II
- 1.8-V HSTL Class I and II
- 1.2-V HSTL
- SSTL-2 Class I and II
- SSTL-18 Class I and II

Table 2–16 describes the I/O standards supported by Stratix II devices.

Table 2–16. Stratix II Supported I/O Standards (Part 1 of 2)

I/O Standard	Type	Input Reference Voltage (V_{REF}) (V)	Output Supply Voltage (V_{CCIO}) (V)	Board Termination Voltage (V_{TT}) (V)
LVTTL	Single-ended	-	3.3	-
LVCMOS	Single-ended	-	3.3	-
2.5 V	Single-ended	-	2.5	-
1.8 V	Single-ended	-	1.8	-
1.5-V LVCMOS	Single-ended	-	1.5	-
3.3-V PCI	Single-ended	-	3.3	-
3.3-V PCI-X mode 1	Single-ended	-	3.3	-
LVDS	Differential	-	2.5 *(3)*	-
LVPECL *(1)*	Differential	-	3.3	-
HyperTransport technology	Differential	-	2.5	-
Differential 1.5-V HSTL Class I and II *(2)*	Differential	0.75	1.5	0.75
Differential 1.8-V HSTL Class I and II *(2)*	Differential	0.90	1.8	0.90
Differential SSTL-18 Class I and II *(2)*	Differential	0.90	1.8	0.90
Differential SSTL-2 Class I and II *(2)*	Differential	1.25	2.5	1.25
1.2-V HSTL*(4)*	Voltage-referenced	0.6	1.2	0.6
1.5-V HSTL Class I and II	Voltage-referenced	0.75	1.5	0.75
1.8-V HSTL Class I and II	Voltage-referenced	0.9	1.8	0.9
SSTL-18 Class I and II	Voltage-referenced	0.90	1.8	0.90

Table 2–16. Stratix II Supported I/O Standards (Part 2 of 2)

I/O Standard	Type	Input Reference Voltage (V_{REF}) (V)	Output Supply Voltage (V_{CCIO}) (V)	Board Termination Voltage (V_{TT}) (V)
SSTL-2 Class I and II	Voltage-referenced	1.25	2.5	1.25

Notes to Table 2–16:

(1) This I/O standard is only available on input and output column clock pins.

(2) This I/O standard is only available on input clock pins and DQS pins in I/O banks 3, 4, 7, and 8, and output clock pins in I/O banks 9,10, 11, and 12.

(3) V_{CCIO} is 3.3 V when using this I/O standard in input and output column clock pins (in I/O banks 9, 10, 11, and 12). The clock input pins supporting LVDS on banks 3, 4, 7, and 8 use V_{CCINT} for LVDS input operations and have no dependency on the V_{CCIO} level of the bank.

(4) 1.2-V HSTL is only supported in I/O banks 4,7, and 8.



For more information on I/O standards supported by Stratix II I/O banks, refer to the *Selectable I/O Standards in Stratix II & Stratix II GX Devices* chapter in volume 2 of the *Stratix II Device Handbook* or the *Stratix II GX Device Handbook*.

Stratix II devices contain eight I/O banks and four enhanced PLL external clock output banks, as shown in Figure 2–57. The four I/O banks on the right and left of the device contain circuitry to support high-speed differential I/O for LVDS and HyperTransport inputs and outputs. These banks support all Stratix II I/O standards except PCI or PCI-X I/O pins, and SSTL-18 Class II and HSTL outputs. The top and bottom I/O banks support all single-ended I/O standards. Additionally, enhanced PLL external clock output banks allow clock output capabilities such as differential support for SSTL and HSTL.

Figure 2–57. Stratix II I/O Banks *Notes (1), (2), (3), (4)*

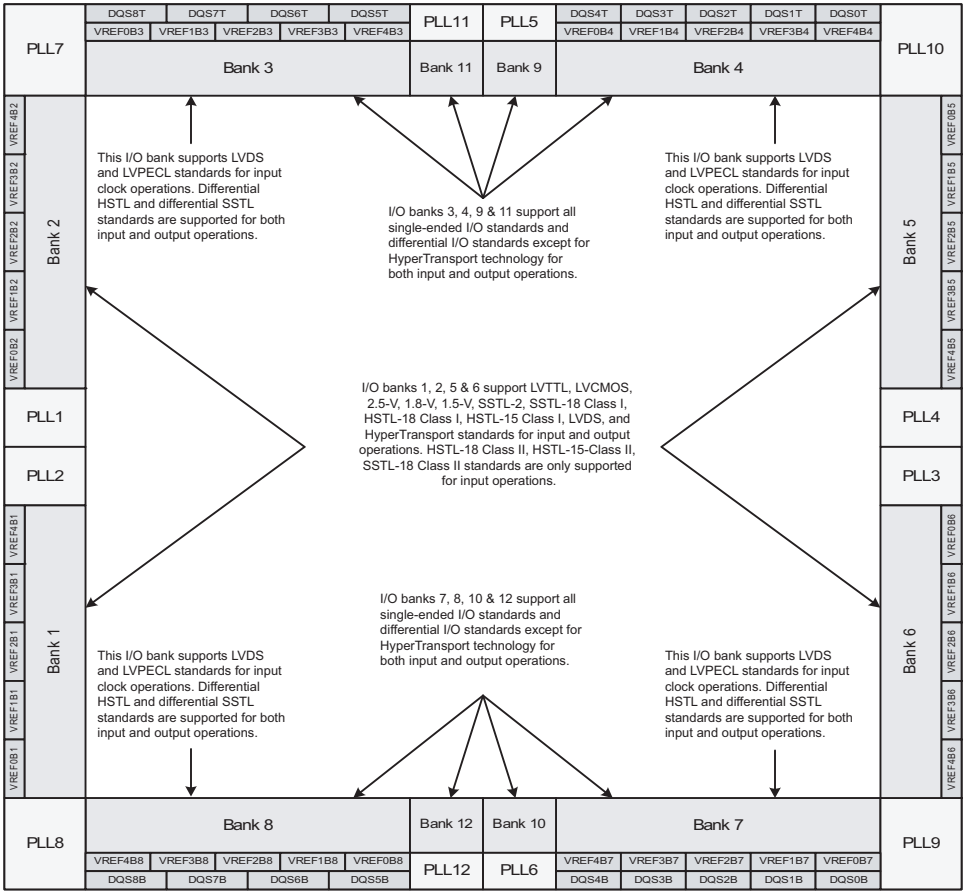

Notes to Figure 2–57:

(1) Figure 2–57 is a top view of the silicon die that corresponds to a reverse view for flip-chip packages. It is a graphical representation only.

(2) Depending on the size of the device, different device members have different numbers of V_{REF} groups. Refer to the pin list and the Quartus II software for exact locations.

(3) Banks 9 through 12 are enhanced PLL external clock output banks. These PLL banks utilize the adjacent V_{REF} group when voltage-referenced standards are implemented. For example, if an SSTL input is implemented in PLL bank 10, the voltage level at VREFB7 is the reference voltage level for the SSTL input.

(4) Horizontal I/O banks feature SERDES and DPA circuitry for high speed differential I/O standards. See the *High Speed Differential I/O Interfaces in Stratix II & Stratix II GX Devices* chapter of the *Stratix II Device Handbook, Volume 2* or the *Stratix II GX Device Handbook, Volume 2* for more information on differential I/O standards.

Each I/O bank has its own VCCIO pins. A single device can support 1.5-, 1.8-, 2.5-, and 3.3-V interfaces; each bank can support a different V_{CCIO} level independently. Each bank also has dedicated VREF pins to support the voltage-referenced standards (such as SSTL-2). The PLL banks utilize the adjacent VREF group when voltage-referenced standards are implemented. For example, if an SSTL input is implemented in PLL bank 10, the voltage level at VREFB7 is the reference voltage level for the SSTL input.

I/O pins that reside in PLL banks 9 through 12 are powered by the VCC_PLL<*5, 6, 11, or 12*>_OUT pins, respectively. The EP2S60F484, EP2S60F780, EP2S90H484, EP2S90F780, and EP2S130F780 devices do not support PLLs 11 and 12. Therefore, any I/O pins that reside in bank 11 are powered by the VCCIO3 pin, and any I/O pins that reside in bank 12 are powered by the VCCIO8 pin.

Each I/O bank can support multiple standards with the same V_{CCIO} for input and output pins. Each bank can support one V_{REF} voltage level. For example, when V_{CCIO} is 3.3 V, a bank can support LVTTL, LVCMOS, and 3.3-V PCI for inputs and outputs.

On-Chip Termination

Stratix II devices provide differential (for the LVDS or HyperTransport technology I/O standard), series, and parallel on-chip termination to reduce reflections and maintain signal integrity. On-chip termination simplifies board design by minimizing the number of external termination resistors required. Termination can be placed inside the package, eliminating small stubs that can still lead to reflections.

Stratix II devices provide four types of termination:

- Differential termination (R_D)
- Series termination (R_S) without calibration
- Series termination (R_S) with calibration
- Parallel termination (R_T) with calibration

Table 2–17 shows the Stratix II on-chip termination support per I/O bank.

Table 2–17. On-Chip Termination Support by I/O Banks (Part 1 of 2)

On-Chip Termination Support	I/O Standard Support	Top & Bottom Banks	Left & Right Banks
Series termination without calibration	3.3-V LVTTL	✓	✓
	3.3-V LVCMOS	✓	✓
	2.5-V LVTTL	✓	✓
	2.5-V LVCMOS	✓	✓
	1.8-V LVTTL	✓	✓
	1.8-V LVCMOS	✓	✓
	1.5-V LVTTL	✓	✓
	1.5-V LVCMOS	✓	✓
	SSTL-2 Class I and II	✓	✓
	SSTL-18 Class I	✓	✓
	SSTL-18 Class II	✓	
	1.8-V HSTL Class I	✓	✓
	1.8-V HSTL Class II	✓	
	1.5-V HSTL Class I	✓	✓
	1.2-V HSTL	✓	

Table 2–17. On-Chip Termination Support by I/O Banks (Part 2 of 2)

On-Chip Termination Support	I/O Standard Support	Top & Bottom Banks	Left & Right Banks
Series termination with calibration	3.3-V LVTTL	✓	
	3.3-V LVCMOS	✓	
	2.5-V LVTTL	✓	
	2.5-V LVCMOS	✓	
	1.8-V LVTTL	✓	
	1.8-V LVCMOS	✓	
	1.5-V LVTTL	✓	
	1.5-V LVCMOS	✓	
	SSTL-2 Class I and II	✓	
	SSTL-18 Class I and II	✓	
	1.8-V HSTL Class I	✓	
	1.8-V HSTL Class II	✓	
	1.5-V HSTL Class I	✓	
	1.2-V HSTL	✓	
Parallel termination with calibration	SSTL-2 Class I and II	✓	
	SSTL-18 Class I and II	✓	
	1.8-V HSTL Class I	✓	
	1.8-V HSTL Class II	✓	
	1.5-V HSTL Class I and II	✓	
	1.2-V HSTL	✓	
Differential termination *(1)*	LVDS		✓
	HyperTransport technology		✓

Note to Table 2–17:

(1) Clock pins `CLK1`, `CLK3`, `CLK9`, `CLK11`, and pins `FPLL[7..10]CLK` do not support differential on-chip termination. Clock pins `CLK0`, `CLK2`, `CLK8`, and `CLK10` do support differential on-chip termination. Clock pins in the top and bottom banks (`CLK[4..7, 12..15]`) do not support differential on-chip termination.

Differential On-Chip Termination

Stratix II devices support internal differential termination with a nominal resistance value of 100 Ω for LVDS or HyperTransport technology input receiver buffers. LVPECL input signals (supported on clock pins only) require an external termination resistor. Differential on-chip termination is supported across the full range of supported differential data rates as shown in the *DC & Switching Characteristics* chapter in volume 1 of the *Stratix II Device Handbook*.



For more information on differential on-chip termination, refer to the *High-Speed Differential I/O Interfaces with DPA in Stratix II & Stratix II GX Devices* chapter in volume 2 of the *Stratix II Device Handbook* or the *Stratix II GX Device Handbook*.



For more information on tolerance specifications for differential on-chip termination, refer to the *DC & Switching Characteristics* chapter in volume 1 of the *Stratix II Device Handbook*.

On-Chip Series Termination Without Calibration

Stratix II devices support driver impedance matching to provide the I/O driver with controlled output impedance that closely matches the impedance of the transmission line. As a result, reflections can be significantly reduced. Stratix II devices support on-chip series termination for single-ended I/O standards with typical R_S values of 25 and 50 Ω. Once matching impedance is selected, current drive strength is no longer selectable. Table 2–17 shows the list of output standards that support on-chip series termination without calibration.

On-Chip Series Termination with Calibration

Stratix II devices support on-chip series termination with calibration in column I/O pins in top and bottom banks. There is one calibration circuit for the top I/O banks and one circuit for the bottom I/O banks. Each on-chip series termination calibration circuit compares the total impedance of each I/O buffer to the external 25- or 50-Ω resistors connected to the `RUP` and `RDN` pins, and dynamically enables or disables the transistors until they match. Calibration occurs at the end of device configuration. Once the calibration circuit finds the correct impedance, it powers down and stops changing the characteristics of the drivers.



For more information on series on-chip termination supported by Stratix II devices, refer to the *Selectable I/O Standards in Stratix II & Stratix II GX Devices* chapter in volume 2 of the *Stratix II Device Handbook* or the *Stratix II GX Device Handbook*.

For more information on tolerance specifications for on-chip termination with calibration, refer to the *DC & Switching Characteristics* chapter in volume 1 of the *Stratix II Device Handbook*.

On-Chip Parallel Termination with Calibration

Stratix II devices support on-chip parallel termination with calibration for column I/O pins only. There is one calibration circuit for the top I/O banks and one circuit for the bottom I/O banks. Each on-chip parallel termination calibration circuit compares the total impedance of each I/O buffer to the external 50-Ω resistors connected to the RUP and RDN pins and dynamically enables or disables the transistors until they match. Calibration occurs at the end of device configuration. Once the calibration circuit finds the correct impedance, it powers down and stops changing the characteristics of the drivers.

On-chip parallel termination with calibration is only supported for input pins.

For more information on on-chip termination supported by Stratix II devices, refer to the *Selectable I/O Standards in Stratix II & Stratix II GX Devices* chapter in volume 2 of the *Stratix II Device Handbook* or the *Stratix II GX Device Handbook*.

For more information on tolerance specifications for on-chip termination with calibration, refer to the *DC & Switching Characteristics* chapter in volume 1 of the *Stratix II Device Handbook*.

MultiVolt I/O Interface

The Stratix II architecture supports the MultiVolt I/O interface feature that allows Stratix II devices in all packages to interface with systems of different supply voltages.

The Stratix II VCCINT pins must always be connected to a 1.2-V power supply. With a 1.2-V V_{CCINT} level, input pins are 1.5-, 1.8-, 2.5-, and 3.3-V tolerant. The VCCIO pins can be connected to either a 1.5-, 1.8-, 2.5-, or 3.3-V power supply, depending on the output requirements. The output levels are compatible with systems of the same voltage as the power supply (for example, when VCCIO pins are connected to a 1.5-V power supply, the output levels are compatible with 1.5-V systems).

The Stratix II VCCPD power pins must be connected to a 3.3-V power supply. These power pins are used to supply the pre-driver power to the output buffers, which increases the performance of the output pins. The VCCPD pins also power configuration input pins and JTAG input pins.

Table 2–18 summarizes Stratix II MultiVolt I/O support.

Table 2–18. Stratix II MultiVolt I/O Support *Note (1)*

V_{CCIO} (V)	Input Signal (V)					Output Signal (V)					
	1.2	1.5	1.8	2.5	3.3	1.2	1.5	1.8	2.5	3.3	5.0
1.2	(4)	✓ (2)	✓ (2)	✓ (2)	✓ (2)	✓ (4)					
1.5	(4)	✓	✓	✓ (2)	✓ (2)	✓ (3)	✓				
1.8	(4)	✓	✓	✓ (2)	✓ (2)	✓ (3)	✓ (3)	✓			
2.5	(4)			✓	✓	✓ (3)	✓ (3)	✓ (3)	✓		
3.3	(4)			✓	✓	✓ (3)	✓ (3)	✓ (3)	✓ (3)	✓	✓

Notes to Table 2–18:

(1) To drive inputs higher than V_{CCIO} but less than 4.0 V, disable the PCI clamping diode and select the **Allow LVTTL and LVCMOS input levels to overdrive input buffer** option in the Quartus II software.

(2) The pin current may be slightly higher than the default value. You must verify that the driving device's V_{OL} maximum and V_{OH} minimum voltages do not violate the applicable Stratix II V_{IL} maximum and V_{IH} minimum voltage specifications.

(3) Although V_{CCIO} specifies the voltage necessary for the Stratix II device to drive out, a receiving device powered at a different level can still interface with the Stratix II device if it has inputs that tolerate the V_{CCIO} value.

(4) Stratix II devices do not support 1.2-V LVTTL and 1.2-V LVCMOS. Stratix II devices support 1.2-V HSTL.

The TDO and nCEO pins are powered by V_{CCIO} of the bank that they reside in. TDO is in I/O bank 4 and nCEO is in I/O bank 7.

Ideally, the V_{CC} supplies for the I/O buffers of any two connected pins are at the same voltage level. This may not always be possible depending on the V_{CCIO} level of TDO and nCEO pins on master devices and the configuration voltage level chosen by VCCSEL on slave devices. Master and slave devices can be in any position in the chain. Master indicates that it is driving out TDO or nCEO to a slave device.

For multi-device passive configuration schemes, the nCEO pin of the master device drives the nCE pin of the slave device. The VCCSEL pin on the slave device selects which input buffer is used for nCE. When VCCSEL is logic high, it selects the 1.8-V/1.5-V buffer powered by V_{CCIO}. When VCCSEL is logic low it selects the 3.3-V/2.5-V input buffer powered by V_{CCPD}. The ideal case is to have the V_{CCIO} of the nCEO bank in a master device match the VCCSEL settings for the nCE input buffer of the slave device it is connected to, but that may not be possible depending on the application. Table 2–19 contains board design recommendations to ensure that nCEO can successfully drive nCE for all power supply combinations.

Table 2–19. Board Design Recommendations for nCEO

nCE Input Buffer Power in I/O Bank 3	Stratix II nCEO V_{CCIO} Voltage Level in I/O Bank 7				
	V_{CCIO} = 3.3 V	V_{CCIO} = 2.5 V	V_{CCIO} = 1.8 V	V_{CCIO} = 1.5 V	V_{CCIO} = 1.2 V
VCCSEL high (V_{CCIO} Bank 3 = 1.5 V)	✓ *(1), (2)*	✓ *(3), (4)*	✓ *(5)*	✓	✓
VCCSEL high (V_{CCIO} Bank 3 = 1.8 V)	✓ *(1), (2)*	✓ *(3), (4)*	✓	✓	Level shifter required
VCCSEL low (nCE Powered by V_{CCPD} = 3.3V)	✓	✓ *(4)*	✓ *(6)*	Level shifter required	Level shifter required

Notes to Table 2–19:

(1) Input buffer is 3.3-V tolerant.
(2) The nCEO output buffer meets V_{OH} (MIN) = 2.4 V.
(3) Input buffer is 2.5-V tolerant.
(4) The nCEO output buffer meets V_{OH} (MIN) = 2.0 V.
(5) Input buffer is 1.8-V tolerant.
(6) An external 250-Ω pull-up resistor is not required, but recommended if signal levels on the board are not optimal.

For JTAG chains, the TDO pin of the first device drives the TDI pin of the second device in the chain. The V_{CCSEL} input on JTAG input I/O cells (TCK, TMS, TDI, and TRST) is internally hardwired to GND selecting the 3.3-V/2.5-V input buffer powered by V_{CCPD}. The ideal case is to have the V_{CCIO} of the TDO bank from the first device to match the V_{CCSEL} settings for TDI on the second device, but that may not be possible depending on the application. Table 2–20 contains board design recommendations to ensure proper JTAG chain operation.

Table 2–20. Supported TDO/TDI Voltage Combinations (Part 1 of 2)

Device	TDI Input Buffer Power	Stratix II TDO V_{CCIO} Voltage Level in I/O Bank 4				
		V_{CCIO} = 3.3 V	V_{CCIO} = 2.5 V	V_{CCIO} = 1.8 V	V_{CCIO} = 1.5 V	V_{CCIO} = 1.2 V
Stratix II	Always V_{CCPD} (3.3V)	✓ *(1)*	✓ *(2)*	✓ *(3)*	Level shifter required	Level shifter required

Table 2–20. Supported TDO/TDI Voltage Combinations (Part 2 of 2)

Device	TDI Input Buffer Power	Stratix II TDO V_{CCIO} Voltage Level in I/O Bank 4				
		V_{CCIO} = 3.3 V	V_{CCIO} = 2.5 V	V_{CCIO} = 1.8 V	V_{CCIO} = 1.5 V	V_{CCIO} = 1.2 V
Non-Stratix II	VCC = 3.3 V	✓ (1)	✓ (2)	✓ (3)	Level shifter required	Level shifter required
	VCC = 2.5 V	✓ (1), (4)	✓ (2)	✓ (3)	Level shifter required	Level shifter required
	VCC = 1.8 V	✓ (1), (4)	✓ (2), (5)	✓	Level shifter required	Level shifter required
	VCC = 1.5 V	✓ (1), (4)	✓ (2), (5)	✓ (6)	✓	✓

Notes to Table 2–20:

(1) The TDO output buffer meets V_{OH} (MIN) = 2.4 V.
(2) The TDO output buffer meets V_{OH} (MIN) = 2.0 V.
(3) An external 250-Ω pull-up resistor is not required, but recommended if signal levels on the board are not optimal.
(4) Input buffer must be 3.3-V tolerant.
(5) Input buffer must be 2.5-V tolerant.
(6) Input buffer must be 1.8-V tolerant.

High-Speed Differential I/O with DPA Support

Stratix II devices contain dedicated circuitry for supporting differential standards at speeds up to 1 Gbps. The LVDS and HyperTransport differential I/O standards are supported in the Stratix II device. In addition, the LVPECL I/O standard is supported on input and output clock pins on the top and bottom I/O banks.

The high-speed differential I/O circuitry supports the following high speed I/O interconnect standards and applications:

- SPI-4 Phase 2 (POS-PHY Level 4)
- SFI-4
- Parallel RapidIO
- HyperTransport technology

There are four dedicated high-speed PLLs in the EP2S15 to EP2S30 devices and eight dedicated high-speed PLLs in the EP2S60 to EP2S180 devices to multiply reference clocks and drive high-speed differential SERDES channels.

Tables 2–21 through 2–26 show the number of channels that each fast PLL can clock in each of the Stratix II devices. In Tables 2–21 through 2–26 the first row for each transmitter or receiver provides the number of channels driven directly by the PLL. The second row below it shows the maximum channels a PLL can drive if cross bank channels are used from the adjacent center PLL. For example, in the 484-pin FineLine BGA EP2S15

device, PLL 1 can drive a maximum of 10 transmitter channels in I/O bank 1 or a maximum of 19 transmitter channels in I/O banks 1 and 2. The Quartus II software may also merge receiver and transmitter PLLs when a receiver is driving a transmitter. In this case, one fast PLL can drive both the maximum numbers of receiver and transmitter channels.

Table 2–21. EP2S15 Device Differential Channels *Note (1)*

Package	Transmitter/ Receiver	Total Channels	Center Fast PLLs			
			PLL 1	PLL 2	PLL 3	PLL 4
484-pin FineLine BGA	Transmitter	38 *(2)*	10	9	9	10
		(3)	19	19	19	19
	Receiver	42 *(2)*	11	10	10	11
		(3)	21	21	21	21
672-pin FineLine BGA	Transmitter	38 *(2)*	10	9	9	10
		(3)	19	19	19	19
	Receiver	42 *(2)*	11	10	10	11
		(3)	21	21	21	21

Table 2–22. EP2S30 Device Differential Channels *Note (1)*

Package	Transmitter/ Receiver	Total Channels	Center Fast PLLs			
			PLL 1	PLL 2	PLL 3	PLL 4
484-pin FineLine BGA	Transmitter	38 *(2)*	10	9	9	10
		(3)	19	19	19	19
	Receiver	42 *(2)*	11	10	10	11
		(3)	21	21	21	21
672-pin FineLine BGA	Transmitter	58 *(2)*	16	13	13	16
		(3)	29	29	29	29
	Receiver	62 *(2)*	17	14	14	17
		(3)	31	31	31	31

Table 2–23. EP2S60 Differential Channels *Note (1)*

Package	Transmitter/ Receiver	Total Channels	Center Fast PLLs				Corner Fast PLLs *(4)*			
			PLL 1	PLL 2	PLL 3	PLL 4	PLL 7	PLL 8	PLL 9	PLL 10
484-pin FineLine BGA	Transmitter	38 *(2)*	10	9	9	10	10	9	9	10
		(3)	19	19	19	19	-	-	-	-
	Receiver	42 *(2)*	11	10	10	11	11	10	10	11
		(3)	21	21	21	21	-	-	-	-
672-pin FineLine BGA	Transmitter	58 *(2)*	16	13	13	16	16	13	13	16
		(3)	29	29	29	29	-	-	-	-
	Receiver	62 *(2)*	17	14	14	17	17	14	14	17
		(3)	31	31	31	31	-	-	-	-
1,020-pin FineLine BGA	Transmitter	84 *(2)*	21	21	21	21	21	21	21	21
		(3)	42	42	42	42	-	-	-	-
	Receiver	84 *(2)*	21	21	21	21	21	21	21	21
		(3)	42	42	42	42	-	-	-	-

Table 2–24. EP2S90 Differential Channels *Note (1)*

Package	Transmitter/ Receiver	Total Channels	Center Fast PLLs				Corner Fast PLLs *(4)*			
			PLL 1	PLL 2	PLL 3	PLL 4	PLL 7	PLL 8	PLL 9	PLL 10
484-pin Hybrid FineLine BGA	Transmitter	38 *(2)*	10	9	9	10	-	-	-	-
		(3)	19	19	19	19	-	-	-	-
	Receiver	42 *(2)*	11	10	10	11	-	-	-	-
		(3)	21	21	21	21	-	-	-	-
780-pin FineLine BGA	Transmitter	64 *(2)*	16	16	16	16	-	-	-	
		(3)	32	32	32	32	-	-	-	-
	Receiver	68 *(2)*	17	17	17	17	-	-	-	-
		(3)	34	34	34	34	-	-	-	
1,020-pin FineLine BGA	Transmitter	90 *(2)*	23	22	22	23	23	22	22	23
		(3)	45	45	45	45	-	-	-	-
	Receiver	94 *(2)*	23	24	24	23	23	24	24	23
		(3)	46	46	46	46	-	-	-	-
1,508-pin FineLine BGA	Transmitter	118 *(2)*	30	29	29	30	30	29	29	30
		(3)	59	59	59	59	-	-	-	-
	Receiver	118 *(2)*	30	29	29	30	30	29	29	30
		(3)	59	59	59	59	-	-	-	-

Table 2–25. EP2S130 Differential Channels *Note (1)*

Package	Transmitter/ Receiver	Total Channels	Center Fast PLLs				Corner Fast PLLs *(4)*			
			PLL 1	PLL 2	PLL 3	PLL 4	PLL 7	PLL 8	PLL 9	PLL 10
780-pin FineLine BGA	Transmitter	64 *(2)*	16	16	16	16	-	-	-	
		(3)	32	32	32	32	-	-	-	-
	Receiver	68 *(2)*	17	17	17	17	-	-	-	-
		(3)	34	34	34	34	-	-	-	
1,020-pin FineLine BGA	Transmitter	88 *(2)*	22	22	22	22	22	22	22	22
		(3)	44	44	44	44	-	-	-	-
	Receiver	92 *(2)*	23	23	23	23	23	23	23	23
		(3)	46	46	46	46	-	-	-	-
1,508-pin FineLine BGA	Transmitter	156 *(2)*	37	41	41	37	37	41	41	37
		(3)	78	78	78	78	-	-	-	-
	Receiver	156 *(2)*	37	41	41	37	37	41	41	37
		(3)	78	78	78	78	-	-	-	-

Table 2–26. EP2S180 Differential Channels *Note (1)*

Package	Transmitter/ Receiver	Total Channels	Center Fast PLLs				Corner Fast PLLs *(4)*			
			PLL 1	PLL 2	PLL 3	PLL 4	PLL 7	PLL 8	PLL 9	PLL 10
1,020-pin FineLine BGA	Transmitter	88 *(2)*	22	22	22	22	22	22	22	22
		(3)	44	44	44	44	-	-	-	-
	Receiver	92 *(2)*	23	23	23	23	23	23	23	23
		(3)	46	46	46	46	-	-	-	-
1,508-pin FineLine BGA	Transmitter	156 *(2)*	37	41	41	37	37	41	41	37
		(3)	78	78	78	78	-	-	-	-
	Receiver	156 *(2)*	37	41	41	37	37	41	41	37
		(3)	78	78	78	78	-	-	-	-

Notes to Tables 2–21 to 2–26:

(1) The total number of receiver channels includes the four non-dedicated clock channels that can be optionally used as data channels.

(2) This is the maximum number of channels the PLLs can directly drive.

(3) This is the maximum number of channels if the device uses cross bank channels from the adjacent center PLL.

(4) The channels accessible by the center fast PLL overlap with the channels accessible by the corner fast PLL. Therefore, the total number of channels is not the addition of the number of channels accessible by PLLs 1, 2, 3, and 4 with the number of channels accessible by PLLs 7, 8, 9, and 10.

Dedicated Circuitry with DPA Support

Stratix II devices support source-synchronous interfacing with LVDS or HyperTransport signaling at up to 1 Gbps. Stratix II devices can transmit or receive serial channels along with a low-speed or high-speed clock. The receiving device PLL multiplies the clock by an integer factor W = 1 through 32. For example, a HyperTransport technology application where the data rate is 1,000 Mbps and the clock rate is 500 MHz would require that W be set to 2. The SERDES factor *J* determines the parallel data width to deserialize from receivers or to serialize for transmitters. The SERDES factor *J* can be set to 4, 5, 6, 7, 8, 9, or 10 and does not have to equal the PLL clock-multiplication W value. A design using the dynamic phase aligner also supports all of these *J* factor values. For a *J* factor of 1, the Stratix II device bypasses the SERDES block. For a *J* factor of 2, the Stratix II device bypasses the SERDES block, and the DDR input and output registers are used in the IOE. Figure 2–58 shows the block diagram of the Stratix II transmitter channel.

Figure 2–58. Stratix II Transmitter Channel

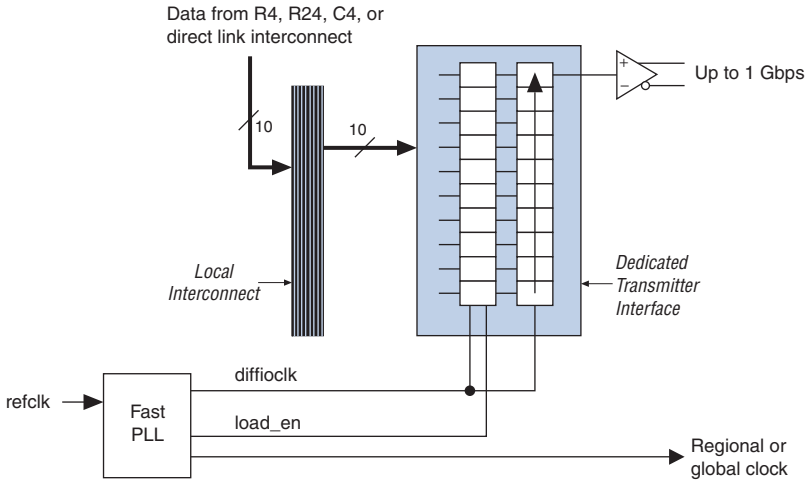

Each Stratix II receiver channel features a DPA block for phase detection and selection, a SERDES, a synchronizer, and a data realigner circuit. You can bypass the dynamic phase aligner without affecting the basic source-synchronous operation of the channel. In addition, you can dynamically switch between using the DPA block or bypassing the block via a control signal from the logic array. Figure 2–59 shows the block diagram of the Stratix II receiver channel.

Figure 2–59. Stratix II Receiver Channel

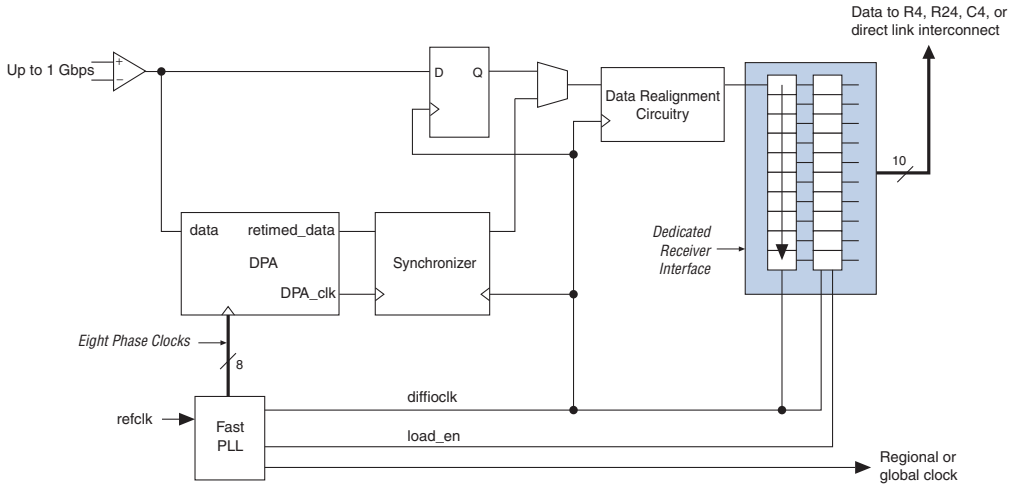

An external pin or global or regional clock can drive the fast PLLs, which can output up to three clocks: two multiplied high-speed clocks to drive the SERDES block and/or external pin, and a low-speed clock to drive the logic array. In addition, eight phase-shifted clocks from the VCO can feed to the DPA circuitry.

For more information on the fast PLL, see the *PLLs in Stratix II & Stratix II GX Devices* chapter in volume 2 of the *Stratix II Device Handbook* or the *Stratix II GX Device Handbook*.

The eight phase-shifted clocks from the fast PLL feed to the DPA block. The DPA block selects the closest phase to the center of the serial data eye to sample the incoming data. This allows the source-synchronous circuitry to capture incoming data correctly regardless of the channel-to-channel or clock-to-channel skew. The DPA block locks to a phase closest to the serial data phase. The phase-aligned DPA clock is used to write the data into the synchronizer.

The synchronizer sits between the DPA block and the data realignment and SERDES circuitry. Since every channel utilizing the DPA block can have a different phase selected to sample the data, the synchronizer is needed to synchronize the data to the high-speed clock domain of the data realignment and the SERDES circuitry.

For high-speed source synchronous interfaces such as POS-PHY 4, Parallel RapidIO, and HyperTransport, the source synchronous clock rate is not a byte- or SERDES-rate multiple of the data rate. Byte alignment is necessary for these protocols since the source synchronous clock does not provide a byte or word boundary since the clock is one half the data rate, not one eighth. The Stratix II device's high-speed differential I/O circuitry provides dedicated data realignment circuitry for user-controlled byte boundary shifting. This simplifies designs while saving ALM resources. You can use an ALM-based state machine to signal the shift of receiver byte boundaries until a specified pattern is detected to indicate byte alignment.

Fast PLL & Channel Layout

The receiver and transmitter channels are interleaved such that each I/O bank on the left and right side of the device has one receiver channel and one transmitter channel per LAB row. Figure 2–60 shows the fast PLL and channel layout in the EP2S15 and EP2S30 devices. Figure 2–61 shows the fast PLL and channel layout in the EP2S60 to EP2S180 devices.

Figure 2–60. Fast PLL & Channel Layout in the EP2S15 & EP2S30 Devices *Note (1)*

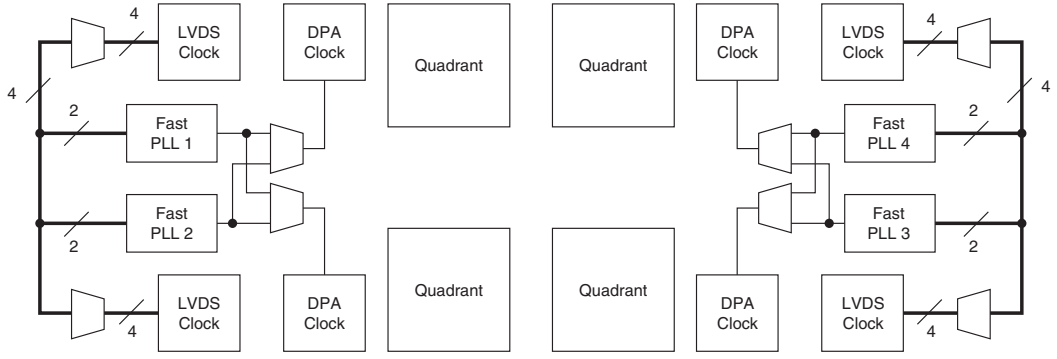

Note to Figure 2–60:
(1) See Table 2–21 for the number of channels each device supports.

Figure 2–61. Fast PLL & Channel Layout in the EP2S60 to EP2S180 Devices *Note (1)*

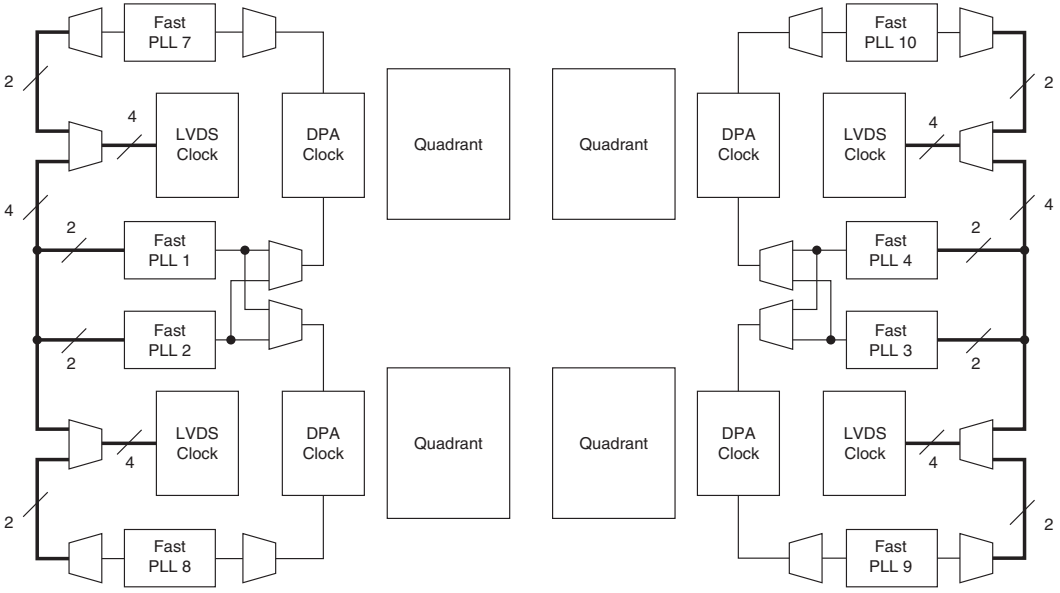

Note to Figure 2–61:

(1) See Tables 2–22 through 2–26 for the number of channels each device supports.

Document Revision History

Table 2–27 shows the revision history for this chapter.

Table 2–27. Document Revision History (Part 1 of 2)

Date and Document Version	Changes Made	Summary of Changes
May 2007, v4.3	Updated "Clock Control Block" section.	—
	Updated note in the "Clock Control Block" section.	—
	Deleted Tables 2-11 and 2-12.	—
	Updated notes to: • Figure 2–41 • Figure 2–42 • Figure 2–43 • Figure 2–45	—
	Updated notes to Table 2–18.	—
	Moved Document Revision History to end of the chapter.	—
August 2006, v4.2	Updated Table 2–18 with note.	—
April 2006, v4.1	• Updated Table 2–13. • Removed Note 2 from Table 2–16. • Updated "On-Chip Termination" section and Table 2–19 to include parallel termination with calibration information. • Added new "On-Chip Parallel Termination with Calibration" section. • Updated Figure 2–44.	• Added parallel on-chip termination description and specification. • Changed RCLK names to match the Quartus II software in Table 2–13.
December 2005, v4.0	Updated "Clock Control Block" section.	—
July 2005, v3.1	• Updated HyperTransport technology information in Table 2–18. • Updated HyperTransport technology information in Figure 2–57. • Added information on the asynchronous clear signal.	—
May 2005, v3.0	• Updated "Functional Description" section. • Updated Table 2–3. • Updated "Clock Control Block" section. • Updated Tables 2–17 through 2–19. • Updated Tables 2–20 through 2–22. • Updated Figure 2–57.	—
March 2005, 2.1	• Updated "Functional Description" section. • Updated Table 2–3.	—

Table 2–27. Document Revision History (Part 2 of 2)

Date and Document Version	Changes Made	Summary of Changes
January 2005, v2.0	• Updated the "MultiVolt I/O Interface" and "TriMatrix Memory" sections. • Updated Tables 2–3, 2–17, and 2–19.	—
October 2004, v1.2	• Updated Tables 2–9, 2–16, 2–26, and 2–27.	—
July 2004, v1.1	• Updated note to Tables 2–9 and 2–16. • Updated Tables 2–16, 2–17, 2–18, 2–19, and 2–20. • Updated Figures 2–41, 2–42, and 2–57. • Removed 3 from list of SERDES factor *J*. • Updated "High-Speed Differential I/O with DPA Support" section. • In "Dedicated Circuitry with DPA Support" section, removed XSBI and changed RapidIO to Parallel RapidIO.	—
February 2004, v1.0	Added document to the Stratix II Device Handbook.	—

3. Configuration & Testing

SII51003-4.2

IEEE Std. 1149.1 JTAG Boundary-Scan Support

All Stratix® II devices provide Joint Test Action Group (JTAG) boundary-scan test (BST) circuitry that complies with the IEEE Std. 1149.1. JTAG boundary-scan testing can be performed either before or after, but not during configuration. Stratix II devices can also use the JTAG port for configuration with the Quartus® II software or hardware using either Jam Files (**.jam**) or Jam Byte-Code Files (**.jbc**).

Stratix II devices support IOE I/O standard setting reconfiguration through the JTAG BST chain. The JTAG chain can update the I/O standard for all input and output pins any time before or during user mode through the `CONFIG_IO` instruction. You can use this capability for JTAG testing before configuration when some of the Stratix II pins drive or receive from other devices on the board using voltage-referenced standards. Because the Stratix II device may not be configured before JTAG testing, the I/O pins may not be configured for appropriate electrical standards for chip-to-chip communication. Programming those I/O standards via JTAG allows you to fully test I/O connections to other devices.

A device operating in JTAG mode uses four required pins, `TDI`,`TDO`, `TMS`, and `TCK`, and one optional pin, `TRST`. The `TCK` pin has an internal weak pull-down resistor, while the `TDI`,`TMS` and `TRST` pins have weak internal pull-ups. The JTAG input pins are powered by the 3.3-V `VCCPD` pins. The TDO output pin is powered by the V_{CCIO} power supply of bank 4.

Stratix II devices also use the JTAG port to monitor the logic operation of the device with the SignalTap® II embedded logic analyzer. Stratix II devices support the JTAG instructions shown in Table 3–1.



Stratix II, Stratix, Cyclone® II, and Cyclone devices must be within the first 17 devices in a JTAG chain. All of these devices have the same JTAG controller. If any of the Stratix II, Stratix, Cyclone II, or Cyclone devices are in the 18th of further position, they fail configuration. This does not affect SignalTap II.

The Stratix II device instruction register length is 10 bits and the `USERCODE` register length is 32 bits. Tables 3–2 and 3–3 show the boundary-scan register length and device `IDCODE` information for Stratix II devices.

Table 3–1. Stratix II JTAG Instructions

JTAG Instruction	Instruction Code	Description
SAMPLE/PRELOAD	00 0000 0101	Allows a snapshot of signals at the device pins to be captured and examined during normal device operation, and permits an initial data pattern to be output at the device pins. Also used by the SignalTap II embedded logic analyzer.
EXTEST *(1)*	00 0000 1111	Allows the external circuitry and board-level interconnects to be tested by forcing a test pattern at the output pins and capturing test results at the input pins.
BYPASS	11 1111 1111	Places the 1-bit bypass register between the TDI and TDO pins, which allows the BST data to pass synchronously through selected devices to adjacent devices during normal device operation.
USERCODE	00 0000 0111	Selects the 32-bit USERCODE register and places it between the TDI and TDO pins, allowing the USERCODE to be serially shifted out of TDO.
IDCODE	00 0000 0110	Selects the IDCODE register and places it between TDI and TDO, allowing the IDCODE to be serially shifted out of TDO.
HIGHZ *(1)*	00 0000 1011	Places the 1-bit bypass register between the TDI and TDO pins, which allows the BST data to pass synchronously through selected devices to adjacent devices during normal device operation, while tri-stating all of the I/O pins.
CLAMP *(1)*	00 0000 1010	Places the 1-bit bypass register between the TDI and TDO pins, which allows the BST data to pass synchronously through selected devices to adjacent devices during normal device operation while holding I/O pins to a state defined by the data in the boundary-scan register.
ICR instructions		Used when configuring a Stratix II device via the JTAG port with a USB Blaster, MasterBlaster™, ByteBlasterMV™, or ByteBlaster II download cable, or when using a **.jam** or **.jbc** via an embedded processor or JRunner.
PULSE_NCONFIG	00 0000 0001	Emulates pulsing the nCONFIG pin low to trigger reconfiguration even though the physical pin is unaffected.
CONFIG_IO *(2)*	00 0000 1101	Allows configuration of I/O standards through the JTAG chain for JTAG testing. Can be executed before, during, or after configuration. Stops configuration if executed during configuration. Once issued, the CONFIG_IO instruction holds nSTATUS low to reset the configuration device. nSTATUS is held low until the IOE configuration register is loaded and the TAP controller state machine transitions to the UPDATE_DR state.
SignalTap II instructions		Monitors internal device operation with the SignalTap II embedded logic analyzer.

Notes to Table 3–1:

(1) Bus hold and weak pull-up resistor features override the high-impedance state of HIGHZ, CLAMP, and EXTEST.

(2) For more information on using the CONFIG_IO instruction, see the *MorphIO: An I/O Reconfiguration Solution for Altera Devices White Paper.*

The Quartus II software has an Auto Usercode feature where you can choose to use the checksum value of a programming file as the JTAG user code. If selected, the checksum is automatically loaded to the USERCODE register. Turn on the **Auto Usercode** option by clicking **Device & Pin Options**, then **General,** in the **Settings** dialog box (Assignments menu).

Table 3–2. Stratix II Boundary-Scan Register Length

Device	Boundary-Scan Register Length
EP2S15	1,140
EP2S30	1,692
EP2S60	2,196
EP2S90	2,748
EP2S130	3,420
EP2S180	3,948

Table 3–3. 32-Bit Stratix II Device IDCODE

Device	IDCODE (32 Bits) *(1)*			
	Version (4 Bits)	Part Number (16 Bits)	Manufacturer Identity (11 Bits)	LSB (1 Bit) *(2)*
EP2S15	0000	0010 0000 1001 0001	000 0110 1110	1
EP2S30	0000	0010 0000 1001 0010	000 0110 1110	1
EP2S60	0001	0010 0000 1001 0011	000 0110 1110	1
EP2S90	0000	0010 0000 1001 0100	000 0110 1110	1
EP2S130	0000	0010 0000 1001 0101	000 0110 1110	1
EP2S180	0000	0010 0000 1001 0110	000 0110 1110	1

Notes to Table 3–3:
(1) The most significant bit (MSB) is on the left.
(2) The IDCODE's least significant bit (LSB) is always 1.

Stratix, Stratix II, Cyclone, and Cyclone II devices must be within the first 17 devices in a JTAG chain. All of these devices have the same JTAG controller. If any of the Stratix, Stratix II, Cyclone, and Cyclone II devices are in the 18th or after they fail configuration. This does not affect SignalTap II.

For more information on JTAG, see the following documents:

- The *IEEE Std. 1149.1 (JTAG) Boundary-Scan Testing for Stratix II & Stratix II GX Devices* chapter of the *Stratix II Device Handbook, Volume 2* or the *Stratix II GX Device Handbook, Volume 2*
- Jam Programming & Test Language Specification

SignalTap II Embedded Logic Analyzer

Stratix II devices feature the SignalTap II embedded logic analyzer, which monitors design operation over a period of time through the IEEE Std. 1149.1 (JTAG) circuitry. You can analyze internal logic at speed without bringing internal signals to the I/O pins. This feature is particularly important for advanced packages, such as FineLine BGA® packages, because it can be difficult to add a connection to a pin during the debugging process after a board is designed and manufactured.

Configuration

The logic, circuitry, and interconnects in the Stratix II architecture are configured with CMOS SRAM elements. Altera® FPGA devices are reconfigurable and every device is tested with a high coverage production test program so you do not have to perform fault testing and can instead focus on simulation and design verification.

Stratix II devices are configured at system power-up with data stored in an Altera configuration device or provided by an external controller (e.g., a MAX® II device or microprocessor). Stratix II devices can be configured using the fast passive parallel (FPP), active serial (AS), passive serial (PS), passive parallel asynchronous (PPA), and JTAG configuration schemes. The Stratix II device's optimized interface allows microprocessors to configure it serially or in parallel, and synchronously or asynchronously. The interface also enables microprocessors to treat Stratix II devices as memory and configure them by writing to a virtual memory location, making reconfiguration easy.

In addition to the number of configuration methods supported, Stratix II devices also offer the design security, decompression, and remote system upgrade features. The design security feature, using configuration bitstream encryption and AES technology, provides a mechanism to protect your designs. The decompression feature allows Stratix II FPGAs to receive a compressed configuration bitstream and decompress this data in real-time, reducing storage requirements and configuration time. The remote system upgrade feature allows real-time system upgrades from remote locations of your Stratix II designs. For more information, see "Configuration Schemes" on page 3–7.

Operating Modes

The Stratix II architecture uses SRAM configuration elements that require configuration data to be loaded each time the circuit powers up. The process of physically loading the SRAM data into the device is called configuration. During initialization, which occurs immediately after configuration, the device resets registers, enables I/O pins, and begins to operate as a logic device. The I/O pins are tri-stated during power-up, and before and during configuration. Together, the configuration and initialization processes are called command mode. Normal device operation is called user mode.

SRAM configuration elements allow Stratix II devices to be reconfigured in-circuit by loading new configuration data into the device. With real-time reconfiguration, the device is forced into command mode with a device pin. The configuration process loads different configuration data, reinitializes the device, and resumes user-mode operation. You can perform in-field upgrades by distributing new configuration files either within the system or remotely.

PORSEL is a dedicated input pin used to select POR delay times of 12 ms or 100 ms during power-up. When the PORSEL pin is connected to ground, the POR time is 100 ms; when the PORSEL pin is connected to V_{CC}, the POR time is 12 ms.

The nIO PULLUP pin is a dedicated input that chooses whether the internal pull-ups on the user I/O pins and dual-purpose configuration I/O pins (nCSO, ASDO, DATA[7..0], nWS, nRS, RDYnBSY, nCS, CS, RUnLU, PGM[2..0], CLKUSR, INIT_DONE, DEV_OE, DEV_CLR) are on or off before and during configuration. A logic high (1.5, 1.8, 2.5, 3.3 V) turns off the weak internal pull-ups, while a logic low turns them on.

Stratix II devices also offer a new power supply, V_{CCPD}, which must be connected to 3.3 V in order to power the 3.3-V/2.5-V buffer available on the configuration input pins and JTAG pins. V_{CCPD} applies to all the JTAG input pins (TCK, TMS, TDI, and TRST) and the configuration input pins when VCCSEL is connected to ground. See Table 3–4 for more information on the pins affected by VCCSEL.

The VCCSEL pin allows the V_{CCIO} setting (of the banks where the configuration inputs reside) to be independent of the voltage required by the configuration inputs. Therefore, when selecting the V_{CCIO}, the V_{IL} and V_{IH} levels driven to the configuration inputs do not have to be a concern.

The PLL_ENA pin and the configuration input pins (Table 3–4) have a dual buffer design: a 3.3-V/2.5-V input buffer and a 1.8-V/1.5-V input buffer. The VCCSEL input pin selects which input buffer is used. The 3.3-V/2.5-V input buffer is powered by $V_{CCPD,}$ while the 1.8-V/1.5-V input buffer is powered by V_{CCIO}. Table 3–4 shows the pins affected by VCCSEL.

Table 3–4. Pins Affected by the Voltage Level at VCCSEL

Pin	VCCSEL = LOW (connected to GND)	VCCSEL = HIGH (connected to V_{CCPD})
nSTATUS (when used as an input)	3.3/2.5-V input buffer is selected. Input buffer is powered by V_{CCPD}.	1.8/1.5-V input buffer is selected. Input buffer is powered by V_{CCIO} of the I/O bank.
nCONFIG		
CONF_DONE (when used as an input)		
DATA[7..0]		
nCE		
DCLK (when used as an input)		
CS		
nWS		
nRS		
nCS		
CLKUSR		
DEV_OE		
DEV_CLRn		
RUnLU		
PLL_ENA		

VCCSEL is sampled during power-up. Therefore, the VCCSEL setting cannot change on the fly or during a reconfiguration. The VCCSEL input buffer is powered by V_{CCINT} and must be hardwired to V_{CCPD} or ground. A logic high VCCSEL connection selects the 1.8-V/1.5-V input buffer, and a logic low selects the 3.3-V/2.5-V input buffer. VCCSEL should be set to comply with the logic levels driven out of the configuration device or MAX® II/microprocessor.

If you need to support configuration input voltages of 3.3 V/2.5 V, you should set the VCCSEL to a logic low; you can set the V_{CCIO} of the I/O bank that contains the configuration inputs to any supported voltage. If

you need to support configuration input voltages of 1.8 V/1.5 V, you should set the VCCSEL to a logic high and the V_{CCIO} of the bank that contains the configuration inputs to 1.8 V/1.5 V.

For more information on multi-volt support, including information on using TDO and nCEO in multi-volt systems, refer to the *Stratix II Architecture* chapter in volume 1 of the *Stratix II Device Handbook*.

Configuration Schemes

You can load the configuration data for a Stratix II device with one of five configuration schemes (see Table 3–5), chosen on the basis of the target application. You can use a configuration device, intelligent controller, or the JTAG port to configure a Stratix II device. A configuration device can automatically configure a Stratix II device at system power-up.

You can configure multiple Stratix II devices in any of the five configuration schemes by connecting the configuration enable (nCE) and configuration enable output (nCEO) pins on each device.

Stratix II FPGAs offer the following:

- Configuration data decompression to reduce configuration file storage
- Design security using configuration data encryption to protect your designs
- Remote system upgrades for remotely updating your Stratix II designs

Table 3–5 summarizes which configuration features can be used in each configuration scheme.

Table 3–5. Stratix II Configuration Features (Part 1 of 2)

Configuration Scheme	Configuration Method	Design Security	Decompression	Remote System Upgrade
FPP	MAX II device or microprocessor and flash device	✓ *(1)*	✓ *(1)*	✓
	Enhanced configuration device		✓ *(2)*	✓
AS	Serial configuration device	✓	✓	✓ *(3)*
PS	MAX II device or microprocessor and flash device	✓	✓	✓
	Enhanced configuration device	✓	✓	✓
	Download cable *(4)*	✓	✓	

Table 3–5. Stratix II Configuration Features (Part 2 of 2)

Configuration Scheme	Configuration Method	Design Security	Decompression	Remote System Upgrade
PPA	MAX II device or microprocessor and flash device			✓
JTAG	Download cable *(4)*			
	MAX II device or microprocessor and flash device			

Notes for Table 3–5:

(1) In these modes, the host system must send a DCLK that is 4× the data rate.

(2) The enhanced configuration device decompression feature is available, while the Stratix II decompression feature is not available.

(3) Only remote update mode is supported when using the AS configuration scheme. Local update mode is not supported.

(4) The supported download cables include the Altera USB Blaster universal serial bus (USB) port download cable, MasterBlaster serial/USB communications cable, ByteBlaster II parallel port download cable, and the ByteBlasterMV parallel port download cable.



See the *Configuring Stratix II & Stratix II GX Devices* chapter in volume 2 of the *Stratix II Device Handbook* or the *Stratix II GX Device Handbook* for more information about configuration schemes in Stratix II and Stratix II GX devices.

Device Security Using Configuration Bitstream Encryption

Stratix II FPGAs are the industry's first FPGAs with the ability to decrypt a configuration bitstream using the Advanced Encryption Standard (AES) algorithm. When using the design security feature, a 128-bit security key is stored in the Stratix II FPGA. To successfully configure a Stratix II FPGA that has the design security feature enabled, it must be configured with a configuration file that was encrypted using the same 128-bit security key. The security key can be stored in non-volatile memory inside the Stratix II device. This non-volatile memory does not require any external devices, such as a battery back-up, for storage.



An encryption configuration file is the same size as a non-encryption configuration file. When using a serial configuration scheme such as passive serial (PS) or active serial (AS), configuration time is the same whether or not the design security feature is enabled. If the fast passive parallel (FPP) scheme us used with the design security or decompression feature, a 4× DCLK is required. This results in a slower configuration time when compared to the configuration time of an FPGA that has neither the design security, nor decompression feature enabled. For more information about this feature, refer to *AN 341: Using the Design Security Feature in Stratix II Devices*. Contact your local Altera sales representative to request this document.

Device Configuration Data Decompression

Stratix II FPGAs support decompression of configuration data, which saves configuration memory space and time. This feature allows you to store compressed configuration data in configuration devices or other memory, and transmit this compressed bit stream to Stratix II FPGAs. During configuration, the Stratix II FPGA decompresses the bit stream in real time and programs its SRAM cells.

Stratix II FPGAs support decompression in the FPP (when using a MAX II device/microprocessor and flash memory), AS and PS configuration schemes. Decompression is not supported in the PPA configuration scheme nor in JTAG-based configuration.

Remote System Upgrades

Shortened design cycles, evolving standards, and system deployments in remote locations are difficult challenges faced by modern system designers. Stratix II devices can help effectively deal with these challenges with their inherent re-programmability and dedicated circuitry to perform remote system updates. Remote system updates help deliver feature enhancements and bug fixes without costly recalls, reduce time to market, and extend product life.

Stratix II FPGAs feature dedicated remote system upgrade circuitry to facilitate remote system updates. Soft logic (Nios® processor or user logic) implemented in the Stratix II device can download a new configuration image from a remote location, store it in configuration memory, and direct the dedicated remote system upgrade circuitry to initiate a reconfiguration cycle. The dedicated circuitry performs error detection during and after the configuration process, recovers from any error condition by reverting back to a safe configuration image, and provides

error status information. This dedicated remote system upgrade circuitry avoids system downtime and is the critical component for successful remote system upgrades.

RSC is supported in the following Stratix II configuration schemes: FPP, AS, PS, and PPA. RSC can also be implemented in conjunction with advanced Stratix II features such as real-time decompression of configuration data and design security using AES for secure and efficient field upgrades.



See the *Remote System Upgrades With Stratix II & Stratix II GX Devices* chapter in volume 2 of the *Stratix II Device Handbook* or the *Stratix II GX Device Handbook* for more information about remote configuration in Stratix II devices.

Configuring Stratix II FPGAs with JRunner

JRunner is a software driver that configures Altera FPGAs, including Stratix II FPGAs, through the ByteBlaster II or ByteBlasterMV cables in JTAG mode. The programming input file supported is in Raw Binary File **(.rbf)** format. JRunner also requires a Chain Description File **(.cdf)** generated by the Quartus II software. JRunner is targeted for embedded JTAG configuration. The source code is developed for the Windows NT operating system (OS), but can be customized to run on other platforms.



For more information on the JRunner software driver, see the *JRunner Software Driver: An Embedded Solution to the JTAG Configuration White Paper* and the source files on the Altera web site **(www.altera.com)**.

Programming Serial Configuration Devices with SRunner

A serial configuration device can be programmed in-system by an external microprocessor using SRunner. SRunner is a software driver developed for embedded serial configuration device programming that can be easily customized to fit in different embedded systems. SRunner is able to read a **.rpd** file (Raw Programming Data) and write to the serial configuration devices. The serial configuration device programming time using SRunner is comparable to the programming time when using the Quartus II software.



For more information about SRunner, see the *SRunner: An Embedded Solution for EPCS Programming* White Paper and the source code on the Altera web site at **www.altera.com**.



For more information on programming serial configuration devices, see the Serial Configuration Devices (EPCS1 & EPCS4) Data Sheet in the *Configuration Handbook*.

Configuring Stratix II FPGAs with the MicroBlaster Driver

The MicroBlaster™ software driver supports an RBF programming input file and is ideal for embedded FPP or PS configuration. The source code is developed for the Windows NT operating system, although it can be customized to run on other operating systems. For more information on the MicroBlaster software driver, see the *Configuring the MicroBlaster Fast Passive Parallel Software Driver White Paper* or the *Configuring the MicroBlaster Passive Serial Software Driver White Paper* on the Altera web site (**www.altera.com**).

PLL Reconfiguration

The phase-locked loops (PLLs) in the Stratix II device family support reconfiguration of their multiply, divide, VCO-phase selection, and bandwidth selection settings without reconfiguring the entire device. You can use either serial data from the logic array or regular I/O pins to program the PLL's counter settings in a serial chain. This option provides considerable flexibility for frequency synthesis, allowing real-time variation of the PLL frequency and delay. The rest of the device is functional while reconfiguring the PLL.



See the *PLLs in Stratix II & Stratix II GX Devices* chapter in volume 2 of the *Stratix II Device Handbook* or the *Stratix II GX Device Handbook* for more information on Stratix II PLLs.

Temperature Sensing Diode (TSD)

Stratix II devices include a diode-connected transistor for use as a temperature sensor in power management. This diode is used with an external digital thermometer device. These devices steer bias current through the Stratix II diode, measuring forward voltage and converting this reading to temperature in the form of an 8-bit signed number (7 bits plus sign). The external device's output represents the junction temperature of the Stratix II device and can be used for intelligent power management.

The diode requires two pins (`tempdiodep` and `tempdioden`) on the Stratix II device to connect to the external temperature-sensing device, as shown in Figure 3–1. The temperature sensing diode is a passive element and therefore can be used before the Stratix II device is powered.

Figure 3–1. External Temperature-Sensing Diode

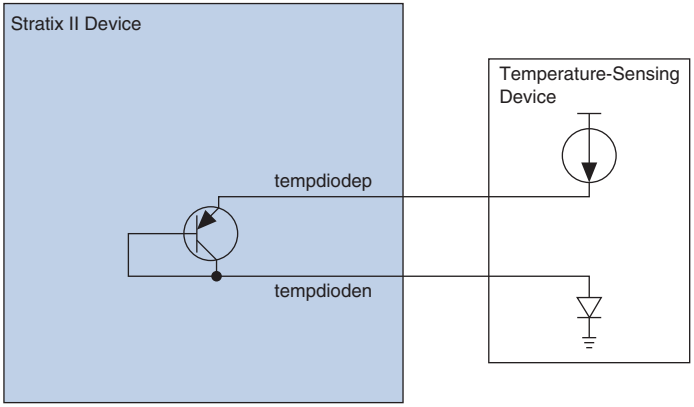

Table 3–6 shows the specifications for bias voltage and current of the Stratix II temperature sensing diode.

Table 3–6. Temperature-Sensing Diode Electrical Characteristics

Parameter	Minimum	Typical	Maximum	Unit
IBIAS high	80	100	120	µA
IBIAS low	8	10	12	µA
VBP - VBN	0.3		0.9	V
VBN		0.7		V
Series resistance			3	Ω

The temperature-sensing diode works for the entire operating range, as shown in Figure 3–2.

Figure 3–2. Temperature vs. Temperature-Sensing Diode Voltage

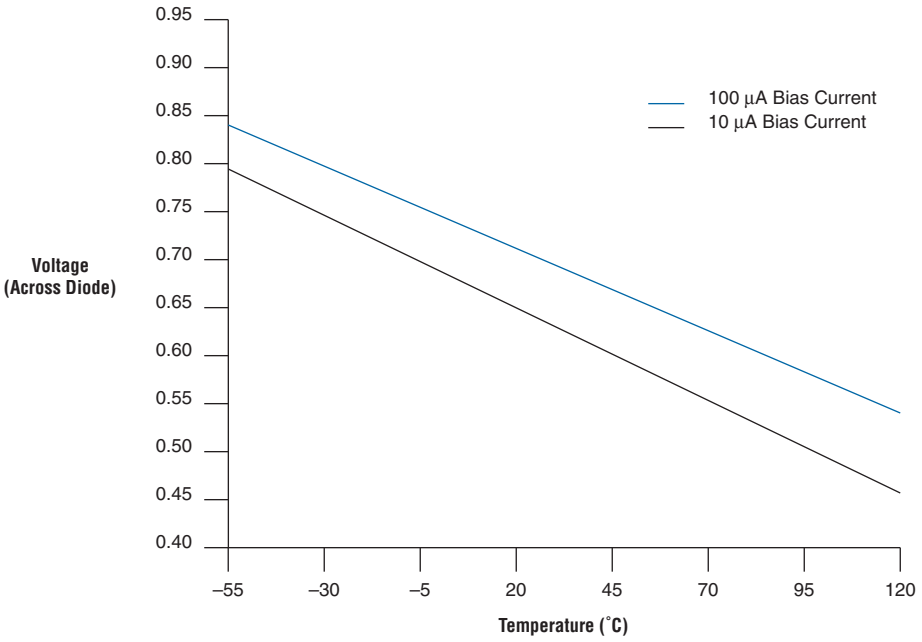

The temperature sensing diode is a very sensitive circuit which can be influenced by noise coupled from other traces on the board, and possibly within the device package itself, depending on device usage. The interfacing device registers temperature based on milivolts of difference as seen at the TSD. Switching I/O near the TSD pins can affect the temperature reading. Altera recommends you take temperature readings during periods of no activity in the device (for example, standby mode where no clocks are toggling in the device), such as when the nearby I/Os are at a DC state, and disable clock networks in the device.

Automated Single Event Upset (SEU) Detection

Stratix II devices offer on-chip circuitry for automated checking of single event upset (SEU) detection. Some applications that require the device to operate error free at high elevations or in close proximity to Earth's North or South Pole require periodic checks to ensure continued data integrity. The error detection cyclic redundancy check (CRC) feature controlled by

the Device & Pin Options dialog box in the Quartus II software uses a 32-bit CRC circuit to ensure data reliability and is one of the best options for mitigating SEU.

You can implement the error detection CRC feature with existing circuitry in Stratix II devices, eliminating the need for external logic. For Stratix II devices, CRC is computed by the device during configuration and checked against an automatically computed CRC during normal operation. The CRC_ERROR pin reports a soft error when configuration SRAM data is corrupted, triggering device reconfiguration.

Custom-Built Circuitry

Dedicated circuitry is built in the Stratix II devices to perform error detection automatically. This error detection circuitry in Stratix II devices constantly checks for errors in the configuration SRAM cells while the device is in user mode. You can monitor one external pin for the error and use it to trigger a re-configuration cycle. You can select the desired time between checks by adjusting a built-in clock divider.

Software Interface

In the Quartus II software version 4.1 and later, you can turn on the automated error detection CRC feature in the Device & Pin Options dialog box. This dialog box allows you to enable the feature and set the internal frequency of the CRC between 400 kHz to 50 MHz. This controls the rate that the CRC circuitry verifies the internal configuration SRAM bits in the FPGA device.

For more information on CRC, refer to *AN 357: Error Detection Using CRC in Altera FPGA Devices*.

Document Revision History

Table 3–7 shows the revision history for this chapter.

Table 3–7. Document Revision History (Part 1 of 2)

Date and Document Version	Changes Made	Summary of Changes
May 2007, v4.2	Moved Document Revision History section to the end of the chapter.	—
	Updated the "Temperature Sensing Diode (TSD)" section.	—

Table 3–7. Document Revision History (Part 2 of 2)

Date and Document Version	Changes Made	Summary of Changes
April 2006, v4.1	Updated "Device Security Using Configuration Bitstream Encryption" section.	—
December 2005, v4.0	Updated "Software Interface" section.	—
May 2005, v3.0	• Updated "IEEE Std. 1149.1 JTAG Boundary-Scan Support" section. • Updated "Operating Modes" section.	—
January 2005, v2.1	Updated JTAG chain device limits.	—
January 2005, v2.0	Updated Table 3–3.	—
July 2004, v1.1	• Added "Automated Single Event Upset (SEU) Detection" section. • Updated "Device Security Using Configuration Bitstream Encryption" section. • Updated Figure 3–2.	—
February 2004, v1.0	Added document to the Stratix II Device Handbook.	—

4. Hot Socketing & Power-On Reset

SII51004-3.2

Stratix® II devices offer hot socketing, which is also known as hot plug-in or hot swap, and power sequencing support without the use of any external devices. You can insert or remove a Stratix II board in a system during system operation without causing undesirable effects to the running system bus or the board that was inserted into the system.

The hot socketing feature also removes some of the difficulty when you use Stratix II devices on printed circuit boards (PCBs) that also contain a mixture of 5.0-, 3.3-, 2.5-, 1.8-, 1.5- and 1.2-V devices. With the Stratix II hot socketing feature, you no longer need to ensure a proper power-up sequence for each device on the board.

The Stratix II hot socketing feature provides:

- Board or device insertion and removal without external components or board manipulation
- Support for any power-up sequence
- Non-intrusive I/O buffers to system buses during hot insertion

This chapter also discusses the power-on reset (POR) circuitry in Stratix II devices. The POR circuitry keeps the devices in the reset state until the V_{CC} is within operating range.

Stratix II Hot-Socketing Specifications

Stratix II devices offer hot socketing capability with all three features listed above without any external components or special design requirements. The hot socketing feature in Stratix II devices allows:

- The device can be driven before power-up without any damage to the device itself.
- I/O pins remain tri-stated during power-up. The device does not drive out before or during power-up, thereby affecting other buses in operation.
- Signal pins do not drive the V_{CCIO}, V_{CCPD}, or V_{CCINT} power supplies. External input signals to I/O pins of the device do not internally power the V_{CCIO} or V_{CCINT} power supplies of the device via internal paths within the device.

Devices Can Be Driven Before Power-Up

You can drive signals into the I/O pins, dedicated input pins and dedicated clock pins of Stratix II devices before or during power-up or power-down without damaging the device. Stratix II devices support any power-up or power-down sequence (V_{CCIO}, V_{CCINT}, and V_{CCPD}) in order to simplify system level design.

I/O Pins Remain Tri-Stated During Power-Up

A device that does not support hot-socketing may interrupt system operation or cause contention by driving out before or during power-up. In a hot socketing situation, Stratix II device's output buffers are turned off during system power-up or power-down. Stratix II device also does not drive out until the device is configured and has attained proper operating conditions.

Signal Pins Do Not Drive the V_{CCIO}, V_{CCINT} or V_{CCPD} Power Supplies

Devices that do not support hot-socketing can short power supplies together when powered-up through the device signal pins. This irregular power-up can damage both the driving and driven devices and can disrupt card power-up.

Stratix II devices do not have a current path from I/O pins, dedicated input pins, or dedicated clock pins to the V_{CCIO}, V_{CCINT}, or V_{CCPD} pins before or during power-up. A Stratix II device may be inserted into (or removed from) a powered-up system board without damaging or interfering with system-board operation. When hot-socketing, Stratix II devices may have a minimal effect on the signal integrity of the backplane.



You can power up or power down the V_{CCIO}, V_{CCINT}, and V_{CCPD} pins in any sequence. The power supply ramp rates can range from 100 µs to 100 ms. All V_{CC} supplies must power down within 100 ms of each other to prevent I/O pins from driving out. During hot socketing, the I/O pin capacitance is less than 15 pF and the clock pin capacitance is less than 20 pF. Stratix II devices meet the following hot socketing specification.

- The hot socketing DC specification is: $| I_{IOPIN} | < 300$ µA.
- The hot socketing AC specification is: $| I_{IOPIN} | < 8$ mA for 10 ns or less.

I_{IOPIN} is the current at any user I/O pin on the device. This specification takes into account the pin capacitance, but not board trace and external loading capacitance. Additional capacitance for trace, connector, and loading needs must be considered separately. For the AC specification, the peak current duration is 10 ns or less because of power-up transients. For more information, refer to the *Hot-Socketing & Power-Sequencing Feature & Testing for Altera Devices* white paper.

A possible concern regarding hot-socketing is the potential for latch-up. Latch-up can occur when electrical subsystems are hot-socketed into an active system. During hot-socketing, the signal pins may be connected and driven by the active system before the power supply can provide current to the device's V_{CC} and ground planes. This condition can lead to latch-up and cause a low-impedance path from V_{CC} to ground within the device. As a result, the device extends a large amount of current, possibly causing electrical damage. Nevertheless, Stratix II devices are immune to latch-up when hot-socketing.

Hot Socketing Feature Implementation in Stratix II Devices

The hot socketing feature turns off the output buffer during the power-up event (either V_{CCINT}, V_{CCIO}, or V_{CCPD} supplies) or power down. The hot-socket circuit will generate an internal `HOTSCKT` signal when either V_{CCINT}, V_{CCIO}, or V_{CCPD} is below threshold voltage. The `HOTSCKT` signal will cut off the output buffer to make sure that no DC current (except for weak pull up leaking) leaks through the pin. When V_{CC} ramps up very slowly, V_{CC} is still relatively low even after the POR signal is released and the configuration is finished. The `CONF_DONE`, `nCEO`, and `nSTATUS` pins fail to respond, as the output buffer can not flip from the state set by the hot socketing circuit at this low V_{CC} voltage. Therefore, the hot socketing circuit has been removed on these configuration pins to make sure that they are able to operate during configuration. It is expected behavior for these pins to drive out during power-up and power-down sequences.

Each I/O pin has the following circuitry shown in Figure 4–1.

Figure 4–1. Hot Socketing Circuit Block Diagram for Stratix II Devices

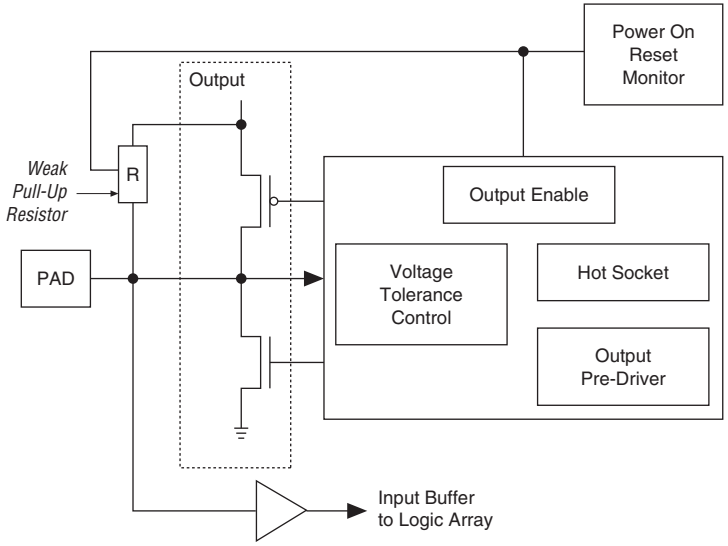

The POR circuit monitors V_{CCINT} voltage level and keeps I/O pins tri-stated until the device is in user mode. The weak pull-up resistor (R) from the I/O pin to V_{CCIO} is present to keep the I/O pins from floating. The 3.3-V tolerance control circuit permits the I/O pins to be driven by 3.3 V before V_{CCIO} and/or V_{CCINT} and/or V_{CCPD} are powered, and it prevents the I/O pins from driving out when the device is not in user mode. The hot socket circuit prevents I/O pins from internally powering V_{CCIO}, V_{CCINT}, and V_{CCPD} when driven by external signals before the device is powered.

Figure 4–2 shows a transistor level cross section of the Stratix II device I/O buffers. This design ensures that the output buffers do not drive when V_{CCIO} is powered before V_{CCINT} or if the I/O pad voltage is higher than V_{CCIO}. This also applies for sudden voltage spikes during hot insertion. There is no current path from signal I/O pins to V_{CCINT} or V_{CCIO} or V_{CCPD} during hot insertion. The V_{PAD} leakage current charges the 3.3-V tolerant circuit capacitance.

Figure 4–2. Transistor Level Diagram of FPGA Device I/O Buffers

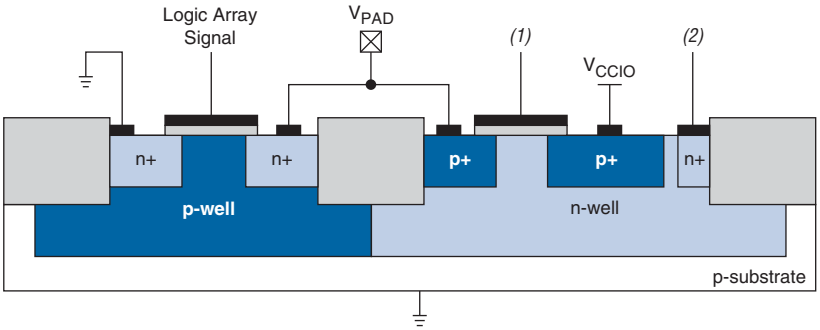

Notes to Figure 4–2:
(1) This is the logic array signal or the larger of either the V_{CCIO} or V_{PAD} signal.
(2) This is the larger of either the V_{CCIO} or V_{PAD} signal.

Power-On Reset Circuitry

Stratix II devices have a POR circuit to keep the whole device system in reset state until the power supply voltage levels have stabilized during power-up. The POR circuit monitors the V_{CCINT}, V_{CCIO}, and V_{CCPD} voltage levels and tri-states all the user I/O pins while V_{CC} is ramping up until normal user levels are reached. The POR circuitry also ensures that all eight I/O bank V_{CCIO} voltages, V_{CCPD} voltage, as well as the logic array V_{CCINT} voltage, reach an acceptable level before configuration is triggered. After the Stratix II device enters user mode, the POR circuit continues to monitor the V_{CCINT} voltage level so that a brown-out condition during user mode can be detected. If there is a V_{CCINT} voltage sag below the Stratix II operational level during user mode, the POR circuit resets the device.

When power is applied to a Stratix II device, a power-on-reset event occurs if V_{CC} reaches the recommended operating range within a certain period of time (specified as a maximum V_{CC} rise time). The maximum V_{CC} rise time for Stratix II device is 100 ms. Stratix II devices provide a dedicated input pin (PORSEL) to select POR delay times of 12 or 100 ms during power-up. When the PORSEL pin is connected to ground, the POR time is 100 ms. When the PORSEL pin is connected to V_{CC}, the POR time is 12 ms.

Document Revision History

Table 4–1 shows the revision history for this chapter.

Table 4–1. Document Revision History

Date and Document Version	Changes Made	Summary of Changes
May 2007, v3.2	Moved the Document Revision History section to the end of the chapter.	—
April 2006, v3.1	• Updated "Signal Pins Do Not Drive the VCCIO, VCCINT or VCCPD Power Supplies" section.	• Updated hot socketing AC specification.
May 2005, v3.0	• Updated "Signal Pins Do Not Drive the VCCIO, VCCINT or VCCPD Power Supplies" section. • Removed information on ESD protection.	—
January 2005, v2.1	Updated input rise and fall time.	—
January 2005, v2.0	Updated the "Hot Socketing Feature Implementation in Stratix II Devices", "ESD Protection", and "Power-On Reset Circuitry" sections.	—
July 2004, v1.1	• Updated all tables. • Added tables.	—
February 2004, v1.0	Added document to the Stratix II Device Handbook.	—

5. DC & Switching Characteristics

SII51005-4.5

Operating Conditions

Stratix® II devices are offered in both commercial and industrial grades. Industrial devices are offered in -4 speed grades and commercial devices are offered in -3 (fastest), -4, -5 speed grades.

Tables 5–1 through 5–32 provide information about absolute maximum ratings, recommended operating conditions, DC electrical characteristics, and other specifications for Stratix II devices.

Absolute Maximum Ratings

Table 5–1 contains the absolute maximum ratings for the Stratix II device family.

Table 5–1. Stratix II Device Absolute Maximum Ratings *Notes (1), (2), (3)*

Symbol	Parameter	Conditions	Minimum	Maximum	Unit
V_{CCINT}	Supply voltage	With respect to ground	–0.5	1.8	V
V_{CCIO}	Supply voltage	With respect to ground	–0.5	4.6	V
V_{CCPD}	Supply voltage	With respect to ground	–0.5	4.6	V
V_{CCA}	Analog power supply for PLLs	With respect to ground	–0.5	1.8	V
V_{CCD}	Digital power supply for PLLs	With respect to ground	–0.5	1.8	V
V_I	DC input voltage *(4)*		–0.5	4.6	V
I_{OUT}	DC output current, per pin		–25	40	mA
T_{STG}	Storage temperature	No bias	–65	150	°C
T_J	Junction temperature	BGA packages under bias	–55	125	°C

Notes to Tables 5–1

(1) See the *Operating Requirements for Altera Devices Data Sheet*.
(2) Conditions beyond those listed in Table 5–1 may cause permanent damage to a device. Additionally, device operation at the absolute maximum ratings for extended periods of time may have adverse affects on the device.
(3) Supply voltage specifications apply to voltage readings taken at the device pins, not at the power supply.
(4) During transitions, the inputs may overshoot to the voltage shown in Table 5–2 based upon the input duty cycle. The DC case is equivalent to 100% duty cycle. During transitions, the inputs may undershoot to –2.0 V for input currents less than 100 mA and periods shorter than 20 ns.

Table 5–2. Maximum Duty Cycles in Voltage Transitions				
Symbol	**Parameter**	**Condition**	**Maximum Duty Cycles**	**Unit**
V_I	Maximum duty cycles in voltage transitions	V_I = 4.0 V	100	%
		V_I = 4.1 V	90	%
		V_I = 4.2 V	50	%
		V_I = 4.3 V	30	%
		V_I = 4.4 V	17	%
		V_I = 4.5 V	10	%

Recommended Operating Conditions

Table 5–3 contains the Stratix II device family recommended operating conditions.

Table 5–3. Stratix II Device Recommended Operating Conditions (Part 1 of 2) Note (1)					
Symbol	**Parameter**	**Conditions**	**Minimum**	**Maximum**	**Unit**
V_{CCINT}	Supply voltage for internal logic	100 µs ≤ risetime ≤ 100 ms *(3)*	1.15	1.25	V
V_{CCIO}	Supply voltage for input and output buffers, 3.3-V operation	100 µs ≤ risetime ≤ 100 ms *(3)*, *(6)*	3.135 (3.00)	3.465 (3.60)	V
	Supply voltage for input and output buffers, 2.5-V operation	100 µs ≤ risetime ≤ 100 ms *(3)*	2.375	2.625	V
	Supply voltage for input and output buffers, 1.8-V operation	100 µs ≤ risetime ≤ 100 ms *(3)*	1.71	1.89	V
	Supply voltage for output buffers, 1.5-V operation	100 µs ≤ risetime ≤ 100 ms *(3)*	1.425	1.575	V
	Supply voltage for input and output buffers, 1.2-V operation	100 µs ≤ risetime ≤ 100 ms *(3)*	1.14	1.26	V
V_{CCPD}	Supply voltage for pre-drivers as well as configuration and JTAG I/O buffers.	100 µs ≤ risetime ≤ 100 ms *(4)*	3.135	3.465	V
V_{CCA}	Analog power supply for PLLs	100 µs ≤ risetime ≤ 100 ms *(3)*	1.15	1.25	V
V_{CCD}	Digital power supply for PLLs	100 µs ≤ risetime ≤ 100 ms *(3)*	1.15	1.25	V
V_I	Input voltage (see Table 5–2)	*(2)*, *(5)*	–0.5	4.0	V
V_O	Output voltage		0	V_{CCIO}	V

Table 5–3. Stratix II Device Recommended Operating Conditions (Part 2 of 2) Note (1)					
Symbol	**Parameter**	**Conditions**	**Minimum**	**Maximum**	**Unit**
T_J	Operating junction temperature	For commercial use	0	85	°C
		For industrial use	–40	100	°C
		For military use *(7)*	–55	125	°C

Notes to Table 5–3:

(1) Supply voltage specifications apply to voltage readings taken at the device pins, not at the power supply.

(2) During transitions, the inputs may overshoot to the voltage shown in Table 5–2 based upon the input duty cycle. The DC case is equivalent to 100% duty cycle. During transitions, the inputs may undershoot to –2.0 V for input currents less than 100 mA and periods shorter than 20 ns.

(3) Maximum V_{CC} rise time is 100 ms, and V_{CC} must rise monotonically from ground to V_{CC}.

(4) V_{CCPD} must ramp-up from 0 V to 3.3 V within 100 µs to 100 ms. If V_{CCPD} is not ramped up within this specified time, your Stratix II device does not configure successfully. If your system does not allow for a V_{CCPD} ramp-up time of 100 ms or less, you must hold `nCONFIG` low until all power supplies are reliable.

(5) All pins, including dedicated inputs, clock, I/O, and JTAG pins, may be driven before V_{CCINT}, V_{CCPD}, and V_{CCIO} are powered.

(6) V_{CCIO} maximum and minimum conditions for PCI and PCI-X are shown in parentheses.

(7) For more information, refer to the *Stratix II Military Temperature Range Support* technical brief.

DC Electrical Characteristics

Table 5–4 shows the Stratix II device family DC electrical characteristics.

Table 5–4. Stratix II Device DC Operating Conditions (Part 1 of 2) Note (1)							
Symbol	**Parameter**	**Conditions**		**Minimum**	**Typical**	**Maximum**	**Unit**
I_I	Input pin leakage current	$V_I = V_{CCIOmax}$ to 0 V *(2)*		–10		10	µA
I_{OZ}	Tri-stated I/O pin leakage current	$V_O = V_{CCIOmax}$ to 0 V *(2)*		–10		10	µA
I_{CCINT0}	V_{CCINT} supply current (standby)	V_I = ground, no load, no toggling inputs T_J = 25° C	EP2S15		0.25	*(3)*	A
			EP2S30		0.30	*(3)*	A
			EP2S60		0.50	*(3)*	A
			EP2S90		0.62	*(3)*	A
			EP2S130		0.82	*(3)*	A
			EP2S180		1.12	*(3)*	A
I_{CCPD0}	V_{CCPD} supply current (standby)	V_I = ground, no load, no toggling inputs T_J = 25° C, V_{CCPD} = 3.3V	EP2S15		2.2	*(3)*	mA
			EP2S30		2.7	*(3)*	mA
			EP2S60		3.6	*(3)*	mA
			EP2S90		4.3	*(3)*	mA
			EP2S130		5.4	*(3)*	mA
			EP2S180		6.8	*(3)*	mA

Table 5–4. Stratix II Device DC Operating Conditions (Part 2 of 2) *Note (1)*

Symbol	Parameter	Conditions		Minimum	Typical	Maximum	Unit
I_{CCI00}	V_{CCIO} supply current (standby)	V_I = ground, no load, no toggling inputs T_J = 25° C	EP2S15		4.0	*(3)*	mA
			EP2S30		4.0	*(3)*	mA
			EP2S60		4.0	*(3)*	mA
			EP2S90		4.0	*(3)*	mA
			EP2S130		4.0	*(3)*	mA
			EP2S180		4.0	*(3)*	mA
R_{CONF} *(4)*	Value of I/O pin pull-up resistor before and during configuration	Vi = 0; V_{CCIO} = 3.3 V		10	25	50	kΩ
		Vi = 0; V_{CCIO} = 2.5 V		15	35	70	kΩ
		Vi = 0; V_{CCIO} = 1.8 V		30	50	100	kΩ
		Vi = 0; V_{CCIO} = 1.5 V		40	75	150	kΩ
		Vi = 0; V_{CCIO} = 1.2 V		50	90	170	kΩ
	Recommended value of I/O pin external pull-down resistor before and during configuration				1	2	kΩ

Notes to Table 5–4:

(1) Typical values are for T_A = 25°C, V_{CCINT} = 1.2 V, and V_{CCIO} = 1.5 V, 1.8 V, 2.5 V, and 3.3 V.

(2) This value is specified for normal device operation. The value may vary during power-up. This applies for all V_{CCIO} settings (3.3, 2.5, 1.8, and 1.5 V).

(3) Maximum values depend on the actual T_J and design utilization. See the Excel-based PowerPlay Early Power Estimator (available at **www.altera.com**) or the Quartus II PowerPlay Power Analyzer feature for maximum values. See the section "Power Consumption" on page 5–20 for more information.

(4) Pin pull-up resistance values are lower if an external source drives the pin higher than V_{CCIO}.

I/O Standard Specifications

Tables 5–5 through 5–32 show the Stratix II device family I/O standard specifications.

Table 5–5. LVTTL Specifications (Part 1 of 2)

Symbol	Parameter	Conditions	Minimum	Maximum	Unit
V_{CCIO} *(1)*	Output supply voltage		3.135	3.465	V
V_{IH}	High-level input voltage		1.7	4.0	V
V_{IL}	Low-level input voltage		–0.3	0.8	V
V_{OH}	High-level output voltage	I_{OH} = –4 mA *(2)*	2.4		V

Table 5–5. LVTTL Specifications (Part 2 of 2)

Symbol	Parameter	Conditions	Minimum	Maximum	Unit
V_{OL}	Low-level output voltage	I_{OL} = 4 mA *(2)*		0.45	V

Notes to Tables 5–5:

(1) Stratix II devices comply to the narrow range for the supply voltage as specified in the EIA/JEDEC Standard, JESD8-B.

(2) This specification is supported across all the programmable drive strength settings available for this I/O standard as shown in the *Stratix II Architecture* chapter in volume 1 of the *Stratix II Device Handbook*.

Table 5–6. LVCMOS Specifications

Symbol	Parameter	Conditions	Minimum	Maximum	Unit
V_{CCIO} *(1)*	Output supply voltage		3.135	3.465	V
V_{IH}	High-level input voltage		1.7	4.0	V
V_{IL}	Low-level input voltage		–0.3	0.8	V
V_{OH}	High-level output voltage	V_{CCIO} = 3.0, I_{OH} = –0.1 mA *(2)*	V_{CCIO} – 0.2		V
V_{OL}	Low-level output voltage	V_{CCIO} = 3.0, I_{OL} = 0.1 mA *(2)*		0.2	V

Notes to Table 5–6:

(1) Stratix II devices comply to the narrow range for the supply voltage as specified in the EIA/JEDEC Standard, JESD8-B.

(2) This specification is supported across all the programmable drive strength available for this I/O standard as shown in the *Stratix II Architecture* chapter in volume 1 of the *Stratix II Device Handbook*.

Table 5–7. 2.5-V I/O Specifications

Symbol	Parameter	Conditions	Minimum	Maximum	Unit
V_{CCIO} *(1)*	Output supply voltage		2.375	2.625	V
V_{IH}	High-level input voltage		1.7	4.0	V
V_{IL}	Low-level input voltage		–0.3	0.7	V
V_{OH}	High-level output voltage	I_{OH} = –1mA *(2)*	2.0		V
V_{OL}	Low-level output voltage	I_{OL} = 1 mA *(2)*		0.4	V

Notes to Table 5–7:

(1) Stratix II devices V_{CCIO} voltage level support of 2.5 ± -5% is narrower than defined in the Normal Range of the EIA/JEDEC standard.

(2) This specification is supported across all the programmable drive settings available for this I/O standard as shown in the *Stratix II Architecture* chapter in volume 1 of the *Stratix II Device Handbook*.

Table 5–8. 1.8-V I/O Specifications

Symbol	Parameter	Conditions	Minimum	Maximum	Unit
V_{CCIO} *(1)*	Output supply voltage		1.71	1.89	V
V_{IH}	High-level input voltage		$0.65 \times V_{CCIO}$	2.25	V
V_{IL}	Low-level input voltage		–0.30	$0.35 \times V_{CCIO}$	V
V_{OH}	High-level output voltage	I_{OH} = –2 mA *(2)*	V_{CCIO} – 0.45		V
V_{OL}	Low-level output voltage	I_{OL} = 2 mA *(2)*		0.45	V

Notes to Table 5–8:

(1) The Stratix II device family's V_{CCIO} voltage level support of 1.8 ± -5% is narrower than defined in the Normal Range of the EIA/JEDEC standard.

(2) This specification is supported across all the programmable drive settings available for this I/O standard as shown in the *Stratix II Architecture* chapter in volume 1 of the *Stratix II Device Handbook*.

Table 5–9. 1.5-V I/O Specifications

Symbol	Parameter	Conditions	Minimum	Maximum	Unit
V_{CCIO} *(1)*	Output supply voltage		1.425	1.575	V
V_{IH}	High-level input voltage		$0.65 \times V_{CCIO}$	V_{CCIO} + 0.30	V
V_{IL}	Low-level input voltage		–0.30	$0.35 \times V_{CCIO}$	V
V_{OH}	High-level output voltage	I_{OH} = –2 mA *(2)*	$0.75 \times V_{CCIO}$		V
V_{OL}	Low-level output voltage	I_{OL} = 2 mA *(2)*		$0.25 \times V_{CCIO}$	V

Notes to Table 5–9:

(1) The Stratix II device family's V_{CCIO} voltage level support of 1.5 ± -5% is narrower than defined in the Normal Range of the EIA/JEDEC standard.

(2) This specification is supported across all the programmable drive settings available for this I/O standard as shown in the *Stratix II Architecture* chapter in volume 1 of the *Stratix II Device Handbook*.

Figures 5–1 and 5–2 show receiver input and transmitter output waveforms, respectively, for all differential I/O standards (LVDS, LVPECL, and HyperTransport technology).

Figure 5–1. Receiver Input Waveforms for Differential I/O Standards

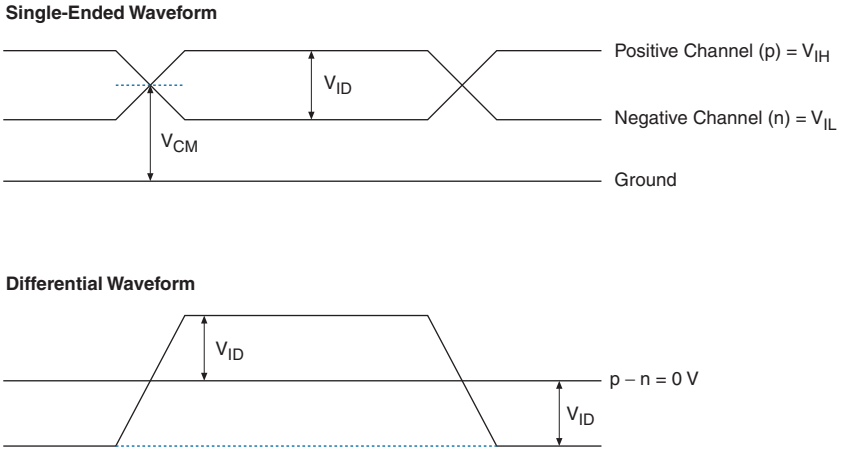

Figure 5–2. Transmitter Output Waveforms for Differential I/O Standards

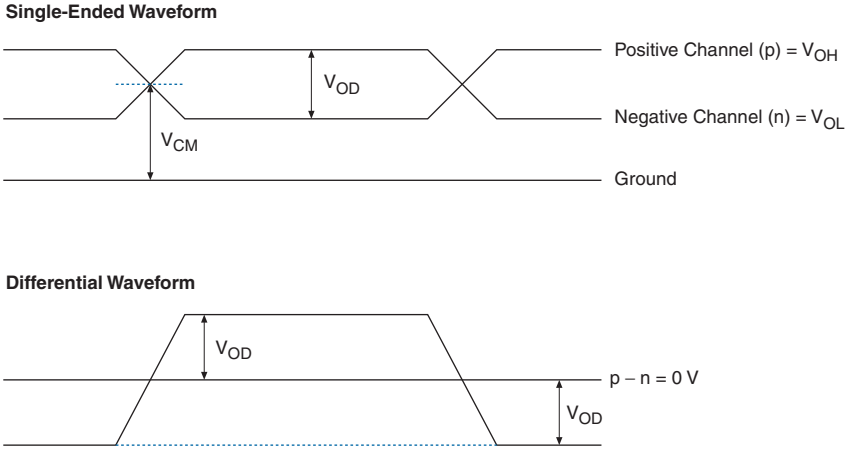

Table 5–10. 2.5-V LVDS I/O Specifications

Symbol	Parameter	Conditions	Minimum	Typical	Maximum	Unit
V_{CCIO}	I/O supply voltage for left and right I/O banks (1, 2, 5, and 6)		2.375	2.500	2.625	V
V_{ID}	Input differential voltage swing (single-ended)		100	350	900	mV
V_{ICM}	Input common mode voltage		200	1,250	1,800	mV
V_{OD}	Output differential voltage (single-ended)	R_L = 100 Ω	250		450	mV
V_{OCM}	Output common mode voltage	R_L = 100 Ω	1.125		1.375	V
R_L	Receiver differential input discrete resistor (external to Stratix II devices)		90	100	110	Ω

Table 5–11. 3.3-V LVDS I/O Specifications

Symbol	Parameter	Conditions	Minimum	Typical	Maximum	Unit
V_{CCIO} *(1)*	I/O supply voltage for top and bottom PLL banks (9, 10, 11, and 12)		3.135	3.300	3.465	V
V_{ID}	Input differential voltage swing (single-ended)		100	350	900	mV
V_{ICM}	Input common mode voltage		200	1,250	1,800	mV
V_{OD}	Output differential voltage (single-ended)	R_L = 100 Ω	250		710	mV
V_{OCM}	Output common mode voltage	R_L = 100 Ω	840		1,570	mV
R_L	Receiver differential input discrete resistor (external to Stratix II devices)		90	100	110	Ω

Note to Table 5–11:

(1) The top and bottom clock input differential buffers in I/O banks 3, 4, 7, and 8 are powered by V_{CCINT}, not V_{CCIO}. The PLL clock output/feedback differential buffers are powered by VCC_PLL_OUT. For differential clock output/feedback operation, VCC_PLL_OUT should be connected to 3.3 V.

Table 5–12. LVPECL Specifications

Symbol	Parameter	Conditions	Minimum	Typical	Maximum	Unit
V_{CCIO} *(1)*	I/O supply voltage		3.135	3.300	3.465	V
V_{ID}	Input differential voltage swing (single-ended)		300	600	1,000	mV
V_{ICM}	Input common mode voltage		1.0		2.5	V
V_{OD}	Output differential voltage (single-ended)	R_L = 100 Ω	525		970	mV
V_{OCM}	Output common mode voltage	R_L = 100 Ω	1,650		2,250	mV
R_L	Receiver differential input resistor		90	100	110	Ω

Note to Table 5–12:

(1) The top and bottom clock input differential buffers in I/O banks 3, 4, 7, and 8 are powered by V_{CCINT}, not V_{CCIO}. The PLL clock output/feedback differential buffers are powered by VCC_PLL_OUT. For differential clock output/feedback operation, VCC_PLL_OUT should be connected to 3.3 V.

Table 5–13. HyperTransport Technology Specifications

Symbol	Parameter	Conditions	Minimum	Typical	Maximum	Unit
V_{CCIO}	I/O supply voltage for left and right I/O banks (1, 2, 5, and 6)		2.375	2.500	2.625	V
V_{ID}	Input differential voltage swing (single-ended)	R_L = 100 Ω	300	600	900	mV
V_{ICM}	Input common mode voltage	R_L = 100 Ω	385	600	845	mV
V_{OD}	Output differential voltage (single-ended)	R_L = 100 Ω	400	600	820	mV
ΔV_{OD}	Change in V_{OD} between high and low	R_L = 100 Ω			75	mV
V_{OCM}	Output common mode voltage	R_L = 100 Ω	440	600	780	mV
ΔV_{OCM}	Change in V_{OCM} between high and low	R_L = 100 Ω			50	mV
R_L	Receiver differential input resistor		90	100	110	Ω

Table 5–14. 3.3-V PCI Specifications (Part 1 of 2)

Symbol	Parameter	Conditions	Minimum	Typical	Maximum	Unit
V_{CCIO}	Output supply voltage		3.0	3.3	3.6	V
V_{IH}	High-level input voltage		0.5 × V_{CCIO}		V_{CCIO} + 0.5	V

Table 5–14. 3.3-V PCI Specifications (Part 2 of 2)

Symbol	Parameter	Conditions	Minimum	Typical	Maximum	Unit
V_{IL}	Low-level input voltage		–0.3		$0.3 \times V_{CCIO}$	V
V_{OH}	High-level output voltage	I_{OUT} = –500 µA	$0.9 \times V_{CCIO}$			V
V_{OL}	Low-level output voltage	I_{OUT} = 1,500 µA			$0.1 \times V_{CCIO}$	V

Table 5–15. PCI-X Mode 1 Specifications

Symbol	Parameter	Conditions	Minimum	Typical	Maximum	Unit
V_{CCIO}	Output supply voltage		3.0		3.6	V
V_{IH}	High-level input voltage		$0.5 \times V_{CCIO}$		$V_{CCIO} + 0.5$	V
V_{IL}	Low-level input voltage		–0.30		$0.35 \times V_{CCIO}$	V
V_{IPU}	Input pull-up voltage		$0.7 \times V_{CCIO}$			V
V_{OH}	High-level output voltage	I_{OUT} = –500 µA	$0.9 \times V_{CCIO}$			V
V_{OL}	Low-level output voltage	I_{OUT} = 1,500 µA			$0.1 \times V_{CCIO}$	V

Table 5–16. SSTL-18 Class I Specifications

Symbol	Parameter	Conditions	Minimum	Typical	Maximum	Unit
V_{CCIO}	Output supply voltage		1.71	1.80	1.89	V
V_{REF}	Reference voltage		0.855	0.900	0.945	V
V_{TT}	Termination voltage		$V_{REF} – 0.04$	V_{REF}	$V_{REF} + 0.04$	V
V_{IH} (DC)	High-level DC input voltage		$V_{REF} + 0.125$			V
V_{IL} (DC)	Low-level DC input voltage				$V_{REF} – 0.125$	V
V_{IH} (AC)	High-level AC input voltage		$V_{REF} + 0.25$			V
V_{IL} (AC)	Low-level AC input voltage				$V_{REF} – 0.25$	V
V_{OH}	High-level output voltage	I_{OH} = –6.7 mA *(1)*	$V_{TT} + 0.475$			V
V_{OL}	Low-level output voltage	I_{OL} = 6.7 mA *(1)*			$V_{TT} – 0.475$	V

Note to Table 5–16:

(1) This specification is supported across all the programmable drive settings available for this I/O standard as shown in the *Stratix II Architecture* chapter in volume 1 of the *Stratix II Device Handbook*.

Table 5–17. SSTL-18 Class II Specifications

Symbol	Parameter	Conditions	Minimum	Typical	Maximum	Unit
V_{CCIO}	Output supply voltage		1.71	1.80	1.89	V
V_{REF}	Reference voltage		0.855	0.900	0.945	V
V_{TT}	Termination voltage		V_{REF} – 0.04	V_{REF}	V_{REF} + 0.04	V
V_{IH} (DC)	High-level DC input voltage		V_{REF} + 0.125			V
V_{IL} (DC)	Low-level DC input voltage				V_{REF} – 0.125	V
V_{IH} (AC)	High-level AC input voltage		V_{REF} + 0.25			V
V_{IL} (AC)	Low-level AC input voltage				V_{REF} – 0.25	V
V_{OH}	High-level output voltage	I_{OH} = –13.4 mA *(1)*	V_{CCIO} – 0.28			V
V_{OL}	Low-level output voltage	I_{OL} = 13.4 mA *(1)*			0.28	V

Note to Table 5–17:

(1) This specification is supported across all the programmable drive settings available for this I/O standard as shown in the *Stratix II Architecture* chapter in volume 1 of the *Stratix II Device Handbook*.

Table 5–18. SSTL-18 Class I & II Differential Specifications

Symbol	Parameter	Conditions	Minimum	Typical	Maximum	Unit
V_{CCIO}	Output supply voltage		1.71	1.80	1.89	V
V_{SWING} (DC)	DC differential input voltage		0.25			V
V_X (AC)	AC differential input cross point voltage		(V_{CCIO}/2) – 0.175		(V_{CCIO}/2) + 0.175	V
V_{SWING} (AC)	AC differential input voltage		0.5			V
V_{ISO}	Input clock signal offset voltage			0.5 × V_{CCIO}		V
ΔV_{ISO}	Input clock signal offset voltage variation			±200		mV
V_{OX} (AC)	AC differential cross point voltage		(V_{CCIO}/2) – 0.125		(V_{CCIO}/2) + 0.125	V

Table 5–19. SSTL-2 Class I Specifications

Symbol	Parameter	Conditions	Minimum	Typical	Maximum	Unit
V_{CCIO}	Output supply voltage		2.375	2.500	2.625	V
V_{TT}	Termination voltage		V_{REF} – 0.04	V_{REF}	V_{REF} + 0.04	V
V_{REF}	Reference voltage		1.188	1.250	1.313	V
V_{IH} (DC)	High-level DC input voltage		V_{REF} + 0.18		3.00	V
V_{IL} (DC)	Low-level DC input voltage		–0.30		V_{REF} – 0.18	V
V_{IH} (AC)	High-level AC input voltage		V_{REF} + 0.35			V
V_{IL} (AC)	Low-level AC input voltage				V_{REF} - 0.35	V
V_{OH}	High-level output voltage	I_{OH} = –8.1 mA *(1)*	V_{TT} + 0.57			V
V_{OL}	Low-level output voltage	I_{OL} = 8.1 mA *(1)*			V_{TT} – 0.57	V

Note to Table 5–19:

(1) This specification is supported across all the programmable drive settings available for this I/O standard as shown in the *Stratix II Architecture* chapter in volume 1 of the *Stratix II Device Handbook*.

Table 5–20. SSTL-2 Class II Specifications

Symbol	Parameter	Conditions	Minimum	Typical	Maximum	Unit
V_{CCIO}	Output supply voltage		2.375	2.500	2.625	V
V_{TT}	Termination voltage		V_{REF} – 0.04	V_{REF}	V_{REF} + 0.04	V
V_{REF}	Reference voltage		1.188	1.250	1.313	V
V_{IH} (DC)	High-level DC input voltage		V_{REF} + 0.18		V_{CCIO} + 0.30	V
V_{IL} (DC)	Low-level DC input voltage		–0.30		V_{REF} – 0.18	V
V_{IH} (AC)	High-level AC input voltage		V_{REF} + 0.35			V
V_{IL} (AC)	Low-level AC input voltage				V_{REF} - 0.35	V
V_{OH}	High-level output voltage	I_{OH} = –16.4 mA *(1)*	V_{TT} + 0.76			V
V_{OL}	Low-level output voltage	I_{OL} = 16.4 mA *(1)*			V_{TT} – 0.76	V

Note to Table 5–20:

(1) This specification is supported across all the programmable drive settings available for this I/O standard as shown in the *Stratix II Architecture* chapter in volume 1 of the *Stratix II Device Handbook*.

Table 5–21. SSTL-2 Class I & II Differential Specifications

Symbol	Parameter	Conditions	Minimum	Typical	Maximum	Unit
V_{CCIO}	Output supply voltage		2.375	2.500	2.625	V
V_{SWING} (DC)	DC differential input voltage		0.36			V
V_X (AC)	AC differential input cross point voltage		$(V_{CCIO}/2) – 0.2$		$(V_{CCIO}/2) + 0.2$	V
V_{SWING} (AC)	AC differential input voltage		0.7			V
V_{ISO}	Input clock signal offset voltage			$0.5 \times V_{CCIO}$		V
ΔV_{ISO}	Input clock signal offset voltage variation			±200		mV
V_{OX} (AC)	AC differential output cross point voltage		$(V_{CCIO}/2) – 0.2$		$(V_{CCIO}/2) + 0.2$	V

Table 5–22. 1.2-V HSTL Specifications

Symbol	Parameter	Conditions	Minimum	Typical	Maximum	Unit
V_{CCIO}	Output supply voltage		1.14	1.20	1.26	V
V_{REF}	Reference voltage		$0.48 \times V_{CCIO}$	$0.50 \times V_{CCIO}$	$0.52 \times V_{CCIO}$	V
V_{IH} (DC)	High-level DC input voltage		$V_{REF} + 0.08$		$V_{CCIO} + 0.15$	V
V_{IL} (DC)	Low-level DC input voltage		–0.15		$V_{REF} – 0.08$	V
V_{IH} (AC)	High-level AC input voltage		$V_{REF} + 0.15$		$V_{CCIO} + 0.24$	V
V_{IL} (AC)	Low-level AC input voltage		–0.24		$V_{REF} – 0.15$	V
V_{OH}	High-level output voltage	I_{OH} = 8 mA	$V_{REF} + 0.15$		$V_{CCIO} + 0.15$	V
V_{OL}	Low-level output voltage	I_{OH} = –8 mA	–0.15		$V_{REF} – 0.15$	V

Table 5–23. 1.5-V HSTL Class I Specifications

Symbol	Parameter	Conditions	Minimum	Typical	Maximum	Unit
V_{CCIO}	Output supply voltage		1.425	1.500	1.575	V
V_{REF}	Input reference voltage		0.713	0.750	0.788	V
V_{TT}	Termination voltage		0.713	0.750	0.788	V
V_{IH} (DC)	DC high-level input voltage		V_{REF} + 0.1			V
V_{IL} (DC)	DC low-level input voltage		–0.3		V_{REF} – 0.1	V
V_{IH} (AC)	AC high-level input voltage		V_{REF} + 0.2			V
V_{IL} (AC)	AC low-level input voltage				V_{REF} – 0.2	V
V_{OH}	High-level output voltage	I_{OH} = 8 mA *(1)*	V_{CCIO} – 0.4			V
V_{OL}	Low-level output voltage	I_{OH} = –8 mA *(1)*			0.4	V

Note to Table 5–23:

(1) This specification is supported across all the programmable drive settings available for this I/O standard as shown in the *Stratix II Architecture* chapter in volume 1 of the *Stratix II Device Handbook*.

Table 5–24. 1.5-V HSTL Class II Specifications

Symbol	Parameter	Conditions	Minimum	Typical	Maximum	Unit
V_{CCIO}	Output supply voltage		1.425	1.500	1.575	V
V_{REF}	Input reference voltage		0.713	0.750	0.788	V
V_{TT}	Termination voltage		0.713	0.750	0.788	V
V_{IH} (DC)	DC high-level input voltage		V_{REF} + 0.1			V
V_{IL} (DC)	DC low-level input voltage		–0.3		V_{REF} – 0.1	V
V_{IH} (AC)	AC high-level input voltage		V_{REF} + 0.2			V
V_{IL} (AC)	AC low-level input voltage				V_{REF} – 0.2	V
V_{OH}	High-level output voltage	I_{OH} = 16 mA *(1)*	V_{CCIO} – 0.4			V
V_{OL}	Low-level output voltage	I_{OH} = –16 mA *(1)*			0.4	V

Note to Table 5–24:

(1) This specification is supported across all the programmable drive settings available for this I/O standard as shown in the *Stratix II Architecture* chapter in volume 1 of the *Stratix II Device Handbook*.

Table 5–25. 1.5-V HSTL Class I & II Differential Specifications

Symbol	Parameter	Conditions	Minimum	Typical	Maximum	Unit
V_{CCIO}	I/O supply voltage		1.425	1.500	1.575	V
V_{DIF} (DC)	DC input differential voltage		0.2			V
V_{CM} (DC)	DC common mode input voltage		0.68		0.90	V
V_{DIF} (AC)	AC differential input voltage		0.4			V
V_{OX} (AC)	AC differential cross point voltage		0.68		0.90	V

Table 5–26. 1.8-V HSTL Class I Specifications

Symbol	Parameter	Conditions	Minimum	Typical	Maximum	Unit
V_{CCIO}	Output supply voltage		1.71	1.80	1.89	V
V_{REF}	Input reference voltage		0.85	0.90	0.95	V
V_{TT}	Termination voltage		0.85	0.90	0.95	V
V_{IH} (DC)	DC high-level input voltage		V_{REF} + 0.1			V
V_{IL} (DC)	DC low-level input voltage		–0.3		V_{REF} – 0.1	V
V_{IH} (AC)	AC high-level input voltage		V_{REF} + 0.2			V
V_{IL} (AC)	AC low-level input voltage				V_{REF} – 0.2	V
V_{OH}	High-level output voltage	I_{OH} = 8 mA *(1)*	V_{CCIO} – 0.4			V
V_{OL}	Low-level output voltage	I_{OH} = –8 mA *(1)*			0.4	V

Note to Table 5–26:

(1) This specification is supported across all the programmable drive settings available for this I/O standard as shown in the *Stratix II Architecture* chapter in volume 1 of the *Stratix II Device Handbook*.

Table 5–27. 1.8-V HSTL Class II Specifications

Symbol	Parameter	Conditions	Minimum	Typical	Maximum	Unit
V_{CCIO}	Output supply voltage		1.71	1.80	1.89	V
V_{REF}	Input reference voltage		0.85	0.90	0.95	V
V_{TT}	Termination voltage		0.85	0.90	0.95	V
V_{IH} (DC)	DC high-level input voltage		V_{REF} + 0.1			V
V_{IL} (DC)	DC low-level input voltage		–0.3		V_{REF} – 0.1	V
V_{IH} (AC)	AC high-level input voltage		V_{REF} + 0.2			V
V_{IL} (AC)	AC low-level input voltage				V_{REF} – 0.2	V
V_{OH}	High-level output voltage	I_{OH} = 16 mA *(1)*	V_{CCIO} – 0.4			V
V_{OL}	Low-level output voltage	I_{OH} = –16 mA *(1)*			0.4	V

Note to Table 5–27:

(1) This specification is supported across all the programmable drive settings available for this I/O standard as shown in the *Stratix II Architecture* chapter in volume 1 of the *Stratix II Device Handbook*.

Table 5–28. 1.8-V HSTL Class I & II Differential Specifications

Symbol	Parameter	Conditions	Minimum	Typical	Maximum	Unit
V_{CCIO}	I/O supply voltage		1.71	1.80	1.89	V
V_{DIF} (DC)	DC input differential voltage		0.2		V_{CCIO} + 0.6 V	V
V_{CM} (DC)	DC common mode input voltage		0.78		1.12	V
V_{DIF} (AC)	AC differential input voltage		0.4		V_{CCIO} + 0.6 V	V
V_{OX} (AC)	AC differential cross point voltage		0.68		0.90	V

Bus Hold Specifications

Table 5–29 shows the Stratix II device family bus hold specifications.

Table 5–29. Bus Hold Parameters

Parameter	Conditions	V_{CCIO} Level										Unit
		1.2 V		1.5 V		1.8 V		2.5 V		3.3 V		
		Min	Max	Min	Max	Min	Max	Min	Max	Min	Max	
Low sustaining current	$V_{IN} > V_{IL}$ (maximum)	22.5		25.0		30.0		50.0		70.0		µA
High sustaining current	$V_{IN} < V_{IH}$ (minimum)	–22.5		–25.0		–30.0		–50.0		–70.0		µA
Low overdrive current	0 V < V_{IN} < V_{CCIO}		120		160		200		300		500	µA
High overdrive current	0 V < V_{IN} < V_{CCIO}		–120		–160		–200		–300		–500	µA
Bus-hold trip point		0.45	0.95	0.50	1.00	0.68	1.07	0.70	1.70	0.80	2.00	V

On-Chip Termination Specifications

Tables 5–30 and 5–31 define the specification for internal termination resistance tolerance when using series or differential on-chip termination.

Table 5–30. Series On-Chip Termination Specification for Top & Bottom I/O Banks (Part 1 of 2)
Notes (1), 2

Symbol	Description	Conditions	Resistance Tolerance		
			Commercial Max	Industrial Max	Unit
25-Ω R_S 3.3/2.5	Internal series termination with calibration (25-Ω setting)	V_{CCIO} = 3.3/2.5 V	±5	±10	%
	Internal series termination without calibration (25-Ω setting)	V_{CCIO} = 3.3/2.5 V	±30	±30	%

Table 5–30. Series On-Chip Termination Specification for Top & Bottom I/O Banks (Part 2 of 2)
Notes (1), 2

Symbol	Description	Conditions	Resistance Tolerance		
			Commercial Max	Industrial Max	Unit
50-Ω R_S 3.3/2.5	Internal series termination with calibration (50-Ω setting)	V_{CCIO} = 3.3/2.5 V	±5	±10	%
	Internal series termination without calibration (50-Ω setting)	V_{CCIO} = 3.3/2.5 V	±30	±30	%
50-Ω R_T 2.5	Internal parallel termination with calibration (50-Ω setting)	V_{CCIO} = 1.8 V	±30	±30	%
25-Ω R_S 1.8	Internal series termination with calibration (25-Ω setting)	V_{CCIO} = 1.8 V	±5	±10	%
	Internal series termination without calibration (25-Ω setting)	V_{CCIO} = 1.8 V	±30	±30	%
50-Ω R_S 1.8	Internal series termination with calibration (50-Ω setting)	V_{CCIO} = 1.8 V	±5	±10	%
	Internal series termination without calibration (50-Ω setting)	V_{CCIO} = 1.8 V	±30	±30	%
50-Ω R_T 1.8	Internal parallel termination with calibration (50-Ω setting)	V_{CCIO} = 1.8 V	±10	±15	%
50–Ω R_S 1.5	Internal series termination with calibration (50-Ω setting)	V_{CCIO} = 1.5 V	±8	±10	%
	Internal series termination without calibration (50-Ω setting)	V_{CCIO} = 1.5 V	±36	±36	%
50-Ω R_T 1.5	Internal parallel termination with calibration (50-Ω setting)	V_{CCIO} = 1.5 V	±10	±15	%
50–Ω R_S 1.2	Internal series termination with calibration (50-Ω setting)	V_{CCIO} = 1.2 V	±8	±10	%
	Internal series termination without calibration (50-Ω setting)	V_{CCIO} = 1.2 V	±50	±50	%
50-Ω R_T 1.2	Internal parallel termination with calibration (50-Ω setting)	V_{CCIO} = 1.2 V	±10	±15	%

Notes for Table 5–30:
(1) The resistance tolerances for calibrated SOCT and POCT are for the moment of calibration. If the temperature or voltage changes over time, the tolerance may also change.
(2) On-chip parallel termination with calibration is only supported for input pins.

Table 5–31. Series & Differential On-Chip Termination Specification for Left & Right I/O Banks

Symbol	Description	Conditions	Resistance Tolerance		
			Commercial Max	Industrial Max	Unit
25-Ω R_S 3.3/2.5	Internal series termination without calibration (25-Ω setting)	V_{CCIO} = 3.3/2.5 V	±30	±30	%
50-Ω R_S 3.3/2.5/1.8	Internal series termination without calibration (50-Ω setting)	V_{CCIO} = 3.3/2.5/1.8 V	±30	±30	%
50-Ω R_S 1.5	Internal series termination without calibration (50-Ω setting)	V_{CCIO} = 1.5 V	±36	±36	%
R_D	Internal differential termination for LVDS or HyperTransport technology (100-Ω setting)	V_{CCIO} = 2.5 V	±20	±25	%

Pin Capacitance

Table 5–32 shows the Stratix II device family pin capacitance.

Table 5–32. Stratix II Device Capacitance *Note (1)*

Symbol	Parameter	Typical	Unit
C_{IOTB}	Input capacitance on I/O pins in I/O banks 3, 4, 7, and 8.	5.0	pF
C_{IOLR}	Input capacitance on I/O pins in I/O banks 1, 2, 5, and 6, including high-speed differential receiver and transmitter pins.	6.1	pF
C_{CLKTB}	Input capacitance on top/bottom clock input pins: `CLK[4..7]` and `CLK[12..15]`.	6.0	pF
C_{CLKLR}	Input capacitance on left/right clock inputs: `CLK0`, `CLK2`, `CLK8`, `CLK10`.	6.1	pF
C_{CLKLR+}	Input capacitance on left/right clock inputs: `CLK1`, `CLK3`, `CLK9`, and `CLK11`.	3.3	pF
C_{OUTFB}	Input capacitance on dual-purpose clock output/feedback pins in PLL banks 9, 10, 11, and 12.	6.7	pF

Note to Table 5–32:

(1) Capacitance is sample-tested only. Capacitance is measured using time-domain reflections (TDR). Measurement accuracy is within ±0.5pF

Power Consumption

Altera® offers two ways to calculate power for a design: the Excel-based PowerPlay Early Power Estimator power calculator and the Quartus® II PowerPlay Power Analyzer feature.

The interactive Excel-based PowerPlay Early Power Estimator is typically used prior to designing the FPGA in order to get an estimate of device power. The Quartus II PowerPlay Power Analyzer provides better quality estimates based on the specifics of the design after place-and-route is complete. The Power Analyzer can apply a combination of user-entered, simulation-derived and estimated signal activities which, combined with detailed circuit models, can yield very accurate power estimates.

In both cases, these calculations should only be used as an estimation of power, not as a specification.



For more information about PowerPlay tools, refer to the *PowerPlay Early Power Estimator User Guide* and the *PowerPlay Early Power Estimator* and *PowerPlay Power Analyzer* chapters in volume 3 of the *Quartus II Handbook*.

The PowerPlay Early Power Estimator is available on the Altera web site at **www.altera.com**. See Table 5–4 on page 5–3 for typical I_{CC} standby specifications.

Timing Model

The DirectDrive™ technology and MultiTrack™ interconnect ensure predictable performance, accurate simulation, and accurate timing analysis across all Stratix II device densities and speed grades. This section describes and specifies the performance, internal timing, external timing, and PLL, high-speed I/O, external memory interface, and JTAG timing specifications.

All specifications are representative of worst-case supply voltage and junction temperature conditions.



The timing numbers listed in the tables of this section are extracted from the Quartus II software version 5.0 SP1.

Preliminary & Final Timing

Timing models can have either preliminary or final status. The Quartus II software issues an informational message during the design compilation if the timing models are preliminary. Table 5–33 shows the status of the Stratix II device timing models.

Preliminary status means the timing model is subject to change. Initially, timing numbers are created using simulation results, process data, and other known parameters. These tests are used to make the preliminary numbers as close to the actual timing parameters as possible.

Final timing numbers are based on actual device operation and testing. These numbers reflect the actual performance of the device under worst-case voltage and junction temperature conditions.

Table 5–33. Stratix II Device Timing Model Status

Device	Preliminary	Final
EP2S15		✓
EP2S30		✓
EP2S60		✓
EP2S90		✓
EP2S130		✓
EP2S180		✓

I/O Timing Measurement Methodology

Altera characterizes timing delays at the worst-case process, minimum voltage, and maximum temperature for input register setup time (t_{SU}) and hold time (t_H). The Quartus II software uses the following equations to calculate t_{SU} and t_H timing for Stratix II devices input signals.

t_{SU} = + data delay from input pin to input register
+ micro setup time of the input register
– clock delay from input pin to input register

t_H = – data delay from input pin to input register
+ micro hold time of the input register
+ clock delay from input pin to input register

Figure 5–3 shows the setup and hold timing diagram for input registers.

Figure 5–3. Input Register Setup & Hold Timing Diagram

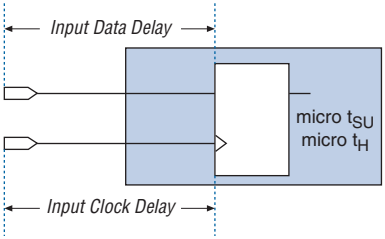

For output timing, different I/O standards require different baseline loading techniques for reporting timing delays. Altera characterizes timing delays with the required termination for each I/O standard and with 0 pF (except for PCI and PCI-X which use 10 pF) loading and the timing is specified up to the output pin of the FPGA device. The Quartus II software calculates the I/O timing for each I/O standard with a default baseline loading as specified by the I/O standards.

The following measurements are made during device characterization. Altera measures clock-to-output delays (t_{CO}) at worst-case process, minimum voltage, and maximum temperature (PVT) for default loading conditions shown in Table 5–34. Use the following equations to calculate clock pin to output pin timing for Stratix II devices.

> t_{CO} from clock pin to I/O pin = delay from clock pad to I/O output register + IOE output register clock-to-output delay + delay from output register to output pin + I/O output delay
>
> t_{xz}/t_{zx} from clock pin to I/O pin = delay from clock pad to I/O output register + IOE output register clock-to-output delay + delay from output register to output pin + I/O output delay + output enable pin delay

Simulation using IBIS models is required to determine the delays on the PCB traces in addition to the output pin delay timing reported by the Quartus II software and the timing model in the device handbook.

1. Simulate the output driver of choice into the generalized test setup, using values from Table 5–34.
2. Record the time to V_{MEAS}.
3. Simulate the output driver of choice into the actual PCB trace and load, using the appropriate IBIS model or capacitance value to represent the load.

4. Record the time to V_{MEAS}.

5. Compare the results of steps 2 and 4. The increase or decrease in delay should be added to or subtracted from the I/O Standard Output Adder delays to yield the actual worst-case propagation delay (clock-to-output) of the PCB trace.

The Quartus II software reports the timing with the conditions shown in Table 5–34 using the above equation. Figure 5–4 shows the model of the circuit that is represented by the output timing of the Quartus II software.

Figure 5–4. Output Delay Timing Reporting Setup Modeled by Quartus II

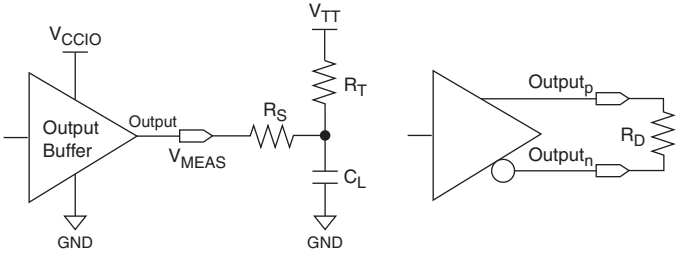

Notes to Figure 5–4:

(1) Output pin timing is reported at the output pin of the FPGA device. Additional delays for loading and board trace delay need to be accounted for with IBIS model simulations.

(2) V_{CCPD} is 3.085 V unless otherwise specified.

(3) V_{CCINT} is 1.12 V unless otherwise specified.

Figures 5–5 and 5–6 show the measurement setup for output disable and output enable timing.

Table 5–34. Output Timing Measurement Methodology for Output Pins *Notes (1), (2), (3)*

I/O Standard	Loading and Termination						Measurement Point
	R_S (Ω)	R_D (Ω)	R_T (Ω)	V_{CCIO} (V)	V_{TT} (V)	C_L (pF)	V_{MEAS} (V)
LVTTL *(4)*				3.135		0	1.5675
LVCMOS *(4)*				3.135		0	1.5675
2.5 V *(4)*				2.375		0	1.1875
1.8 V *(4)*				1.710		0	0.855
1.5 V *(4)*				1.425		0	0.7125
PCI *(5)*				2.970		10	1.485
PCI-X *(5)*				2.970		10	1.485
SSTL-2 Class I	25		50	2.325	1.123	0	1.1625
SSTL-2 Class II	25		25	2.325	1.123	0	1.1625
SSTL-18 Class I	25		50	1.660	0.790	0	0.83
SSTL-18 Class II	25		25	1.660	0.790	0	0.83
1.8-V HSTL Class I	50		50	1.660	0.790	0	0.83
1.8-V HSTL Class II	25		25	1.660	0.790	0	0.83
1.5-V HSTL Class I	50		50	1.375	0.648	0	0.6875
1.5-V HSTL Class II			25	1.375	0.648	0	0.6875
1.2-V HSTL with OCT	50			1.140		0	0.570
Differential SSTL-2 Class I	50		50	2.325	1.123	0	1.1625
Differential SSTL-2 Class II	25		25	2.325	1.123	0	1.1625
Differential SSTL-18 Class I	50		50	1.660	0.790	0	0.83
Differential SSTL-18 Class II	25		25	1.660	0.790	0	0.83
1.5-V Differential HSTL Class I	50		50	1.375	0.648	0	0.6875
1.5-V Differential HSTL Class II			25	1.375	0.648	0	0.6875
1.8-V Differential HSTL Class I	50		50	1.660	0.790	0	0.83
1.8-V Differential HSTL Class II	25		25	1.660	0.790	0	0.83
LVDS		100		2.325		0	1.1625
HyperTransport		100		2.325		0	1.1625
LVPECL		100		3.135		0	1.5675

Notes to Table 5–34:

(1) Input measurement point at internal node is $0.5 \times V_{CCINT}$.

(2) Output measuring point for V_{MEAS} at buffer output is $0.5 \times V_{CCIO}$.

(3) Input stimulus edge rate is 0 to V_{CC} in 0.2 ns (internal signal) from the driver preceding the I/O buffer.

(4) Less than 50-mV ripple on V_{CCIO} and V_{CCPD}, V_{CCINT} = 1.15 V with less than 30-mV ripple

(5) V_{CCPD} = 2.97 V, less than 50-mV ripple on V_{CCIO} and V_{CCPD}, V_{CCINT} = 1.15 V

Figure 5–5. Measurement Setup for t_{xz} *Note (1)*

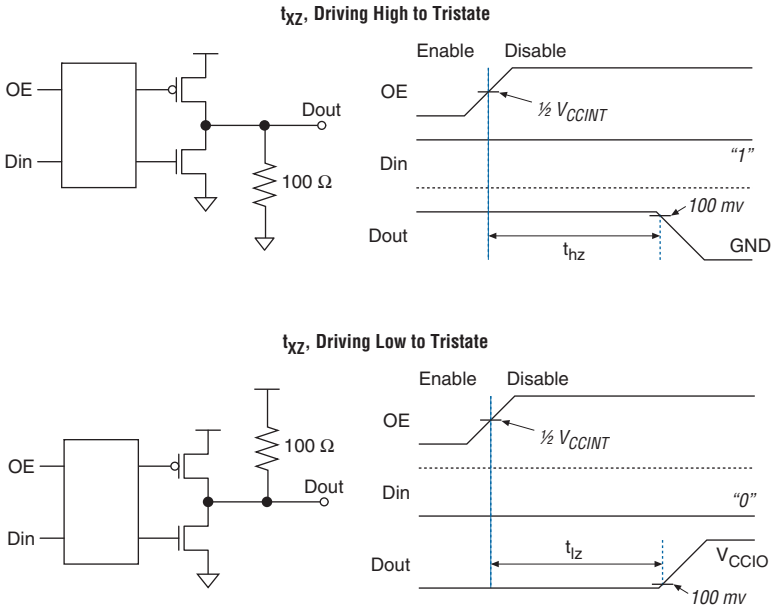

Note to Figure 5–5:
(1) V_{CCINT} is 1.12 V for this measurement.

Figure 5–6. Measurement Setup for t_{zx}

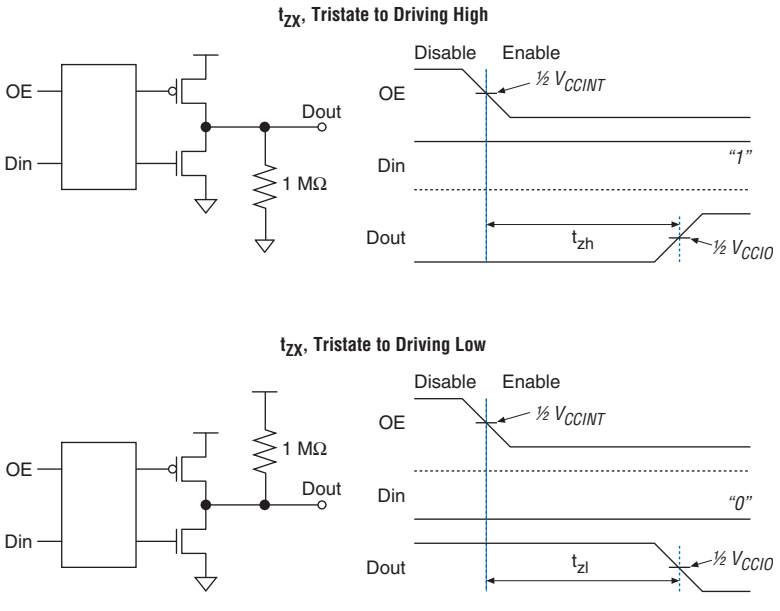

Table 5–35 specifies the input timing measurement setup.

Table 5–35. Timing Measurement Methodology for Input Pins (Part 1 of 2) *Notes (1)–(4)*

I/O Standard	Measurement Conditions			Measurement Point
	V_{CCIO} (V)	V_{REF} (V)	Edge Rate (ns)	V_{MEAS} (V)
LVTTL *(5)*	3.135		3.135	1.5675
LVCMOS *(5)*	3.135		3.135	1.5675
2.5 V *(5)*	2.375		2.375	1.1875
1.8 V *(5)*	1.710		1.710	0.855
1.5 V *(5)*	1.425		1.425	0.7125
PCI *(6)*	2.970		2.970	1.485
PCI-X *(6)*	2.970		2.970	1.485
SSTL-2 Class I	2.325	1.163	2.325	1.1625
SSTL-2 Class II	2.325	1.163	2.325	1.1625
SSTL-18 Class I	1.660	0.830	1.660	0.83
SSTL-18 Class II	1.660	0.830	1.660	0.83
1.8-V HSTL Class I	1.660	0.830	1.660	0.83

Table 5–35. Timing Measurement Methodology for Input Pins (Part 2 of 2) *Notes (1)–(4)*

I/O Standard	Measurement Conditions			Measurement Point
	V_{CCIO} (V)	V_{REF} (V)	Edge Rate (ns)	V_{MEAS} (V)
1.8-V HSTL Class II	1.660	0.830	1.660	0.83
1.5-V HSTL Class I	1.375	0.688	1.375	0.6875
1.5-V HSTL Class II	1.375	0.688	1.375	0.6875
1.2-V HSTL with OCT	1.140	0.570	1.140	0.570
Differential SSTL-2 Class I	2.325	1.163	2.325	1.1625
Differential SSTL-2 Class II	2.325	1.163	2.325	1.1625
Differential SSTL-18 Class I	1.660	0.830	1.660	0.83
Differential SSTL-18 Class II	1.660	0.830	1.660	0.83
1.5-V Differential HSTL Class I	1.375	0.688	1.375	0.6875
1.5-V Differential HSTL Class II	1.375	0.688	1.375	0.6875
1.8-V Differential HSTL Class I	1.660	0.830	1.660	0.83
1.8-V Differential HSTL Class II	1.660	0.830	1.660	0.83
LVDS	2.325		0.100	1.1625
HyperTransport	2.325		0.400	1.1625
LVPECL	3.135		0.100	1.5675

Notes to Table 5–35:

(1) Input buffer sees no load at buffer input.
(2) Input measuring point at buffer input is $0.5 \times V_{CCIO}$.
(3) Output measuring point is $0.5 \times V_{CC}$ at internal node.
(4) Input edge rate is 1 V/ns.
(5) Less than 50-mV ripple on V_{CCIO} and V_{CCPD}, V_{CCINT} = 1.15 V with less than 30-mV ripple
(6) V_{CCPD} = 2.97 V, less than 50-mV ripple on V_{CCIO} and V_{CCPD}, V_{CCINT} = 1.15 V

Performance

Table 5–36 shows Stratix II performance for some common designs. All performance values were obtained with the Quartus II software compilation of library of parameterized modules (LPM), or MegaCore® functions for the finite impulse response (FIR) and fast Fourier transform (FFT) designs.

The performance numbers in Table 5–36 are extracted from the Quartus II software version 5.1 SP1.

Table 5–36. Stratix II Performance Notes (Part 1 of 6) *Note (1)*

Applications		Resources Used			Performance				
		ALUTs	TriMatrix Memory Blocks	DSP Blocks	-3 Speed Grade *(2)*	-3 Speed Grade *(3)*	-4 Speed Grade	-5 Speed Grade	Unit
LE	16-to-1 multiplexer *(4)*	21	0	0	654.87	625.0	523.83	460.4	MHz
	32-to-1 multiplexer *(4)*	38	0	0	519.21	473.26	464.25	384.17	MHz
	16-bit counter	16	0	0	566.57	538.79	489.23	421.05	MHz
	64-bit counter	64	0	0	244.31	232.07	209.11	181.38	MHz
TriMatrix Memory M512 block	Simple dual-port RAM 32 × 18 bit	0	1	0	500.00	476.19	434.02	373.13	MHz
	FIFO 32 x 18 bit	22	1	0	500.00	476.19	434.78	373.13	MHz
TriMatrix Memory M4K block	Simple dual-port RAM 128 x 36 bit *(8)*	0	1	0	540.54	515.46	469.48	401.60	MHz
	True dual-port RAM 128 × 18 bit *(8)*	0	1	0	540.54	515.46	469.48	401.60	MHz
	FIFO 128 × 36 bit	22	1	0	530.22	499.00	469.48	401.60	MHz
	Simple dual-port RAM 128 × 36 bit *(9)*	0	1	0	475.28	453.30	413.22	354.10	MHz
	True dual-port RAM 128 × 18 bit *(9)*	0	1	0	475.28	453.30	413.22	354.10	MHz

Table 5–36. Stratix II Performance Notes (Part 2 of 6) *Note (1)*

Applications		Resources Used			Performance				
		ALUTs	TriMatrix Memory Blocks	DSP Blocks	-3 Speed Grade *(2)*	-3 Speed Grade *(3)*	-4 Speed Grade	-5 Speed Grade	Unit
TriMatrix Memory M-RAM block	Single port RAM 4K × 144 bit	0	1	0	349.65	333.33	303.95	261.09	MHz
	Simple dual-port RAM 4K × 144 bit	0	1	0	420.16	400.00	364.96	313.47	MHz
	True dual-port RAM 4K × 144 bit	0	1	0	349.65	333.33	303.95	261.09	MHz
	Single port RAM 8K × 72 bit	0	1	0	354.60	337.83	307.69	263.85	MHz
	Simple dual-port RAM 8K × 72 bit	0	1	0	420.16	400.00	364.96	313.47	MHz
	True dual-port RAM 8K × 72 bit	0	1	0	349.65	333.33	303.95	261.09	MHz
	Single port RAM 16K × 36 bit	0	1	0	364.96	347.22	317.46	271.73	MHz
	Simple dual-port RAM 16K × 36 bit	0	1	0	420.16	400.00	364.96	313.47	MHz
	True dual-port RAM 16K × 36 bit	0	1	0	359.71	342.46	313.47	268.09	MHz
	Single port RAM 32K × 18 bit	0	1	0	364.96	347.22	317.46	271.73	MHz
	Simple dual-port RAM 32K × 18 bit	0	1	0	420.16	400.0	364.96	313.47	MHz
	True dual-port RAM 32K × 18 bit	0	1	0	359.71	342.46	313.47	268.09	MHz
	Single port RAM 64K × 9 bit	0	1	0	364.96	347.22	317.46	271.73	MHz
	Simple dual-port RAM 64K × 9 bit	0	1	0	420.16	400.0	364.96	313.47	MHz
	True dual-port RAM 64K × 9 bit	0	1	0	359.71	342.46	313.47	268.09	MHz

Table 5–36. Stratix II Performance Notes (Part 3 of 6) *Note (1)*

Applications		Resources Used			Performance				
		ALUTs	TriMatrix Memory Blocks	DSP Blocks	-3 Speed Grade *(2)*	-3 Speed Grade *(3)*	-4 Speed Grade	-5 Speed Grade	Unit
DSP block	9 × 9-bit multiplier *(5)*	0	0	1	430.29	409.16	373.13	320.10	MHz
	18 × 18-bit multiplier *(5)*	0	0	1	410.17	390.01	356.12	305.06	MHz
	18 × 18-bit multiplier *(7)*	0	0	1	450.04	428.08	391.23	335.12	MHz
	36 × 36-bit multiplier *(5)*	0	0	1	250.00	238.15	217.48	186.60	MHz
	36 × 36-bit multiplier *(6)*	0	0	1	410.17	390.01	356.12	305.06	MHz
	18-bit, four-tap FIR filter	0	0	1	410.17	390.01	356.12	305.06	MHz
Larger designs	8-bit,16-tap parallel FIR filter	58	0	4	259.06	240.61	217.15	185.01	MHz
	8-bit, 1024-point, streaming, three multipliers and five adders FFT function	2976	22	9	398.72	364.03	355.23	306.37	MHz
	8-bit, 1024-point, streaming, four multipliers and two adders FFT function	2781	22	12	398.56	409.16	347.22	311.13	MHz
	8-bit, 1024-point, single output, one parallel FFT engine, burst, three multipliers and five adders FFT function	984	5	3	425.17	365.76	346.98	292.39	MHz
	8-bit, 1024-point, single output, one parallel FFT engine, burst, four multipliers and two adders FFT function	919	5	4	427.53	378.78	357.14	307.59	MHz

Table 5–36. Stratix II Performance Notes (Part 4 of 6) *Note (1)*

Applications		Resources Used			Performance				
		ALUTs	TriMatrix Memory Blocks	DSP Blocks	-3 Speed Grade *(2)*	-3 Speed Grade *(3)*	-4 Speed Grade	-5 Speed Grade	Unit
Larger designs	8-bit, 1024-point, single output, two parallel FFT engines, burst, three multiplier and five adders FFT function	1725	10	6	430.29	401.92	373.13	319.08	MHz
	8-bit, 1024-point, single output, two parallel FFT engines, burst, four multipliers and two adders FFT function	1594	10	8	422.65	407.33	373.13	329.10	MHz
	8-bit, 1024-point, quadrant output, one parallel FFT engine, burst, three multipliers and five adders FFT function	2361	10	9	315.45	342.81	325.73	284.25	MHz
	8-bit, 1024-point, quadrant output, one parallel FFT engine, burst, four multipliers and two adders FFT function	2165	10	12	373.13	369.54	317.96	256.14	MHz
	8-bit, 1024-point, quadrant output, two parallel FFT engines, burst, three multipliers and five adders FFT function	3996	14	18	378.50	367.10	332.33	288.68	MHz
	8-bit, 1024-point, quadrant output, two parallel FFT engines, burst, four multipliers and two adders FFT function	3604	14	24	391.38	361.14	340.25	280.89	MHz

Table 5–36. Stratix II Performance Notes (Part 5 of 6) *Note (1)*

Applications		Resources Used			Performance				
		ALUTs	TriMatrix Memory Blocks	DSP Blocks	-3 Speed Grade *(2)*	-3 Speed Grade *(3)*	-4 Speed Grade	-5 Speed Grade	Unit
Larger designs	8-bit, 1024-point, quadrant output, four parallel FFT engines, burst, three multipliers and five adders FFT function	6850	28	36	334.11	345.66	308.54	276.31	MHz
	8-bit, 1024-point, quadrant output, four parallel FFT engines, burst, four multipliers two adders FFT function	6067	28	48	367.91	349.04	327.33	268.24	MHz
	8-bit, 1024-point, quadrant output, one parallel FFT engine, buffered burst, three multipliers and adders FFT function	2730	18	9	387.44	388.34	364.56	306.84	MHz
	8-bit, 1024-point, quadrant output, one parallel FFT engine, buffered burst, four multipliers and two adders FFT function	2534	18	12	419.28	369.66	364.96	307.88	MHz
	8-bit, 1024-point, quadrant output, two parallel FFT engines, buffered burst, three multipliers five adders FFT function	4358	30	18	396.51	378.07	340.13	291.29	MHz
	8-bit, 1024-point, quadrant output, two parallel FFT engines, buffered burst four multipliers and two adders FFT function	3966	30	24	389.71	398.08	356.53	280.74	MHz

Table 5–36. Stratix II Performance Notes (Part 6 of 6) Note (1)

Applications		Resources Used			Performance				
		ALUTs	TriMatrix Memory Blocks	DSP Blocks	-3 Speed Grade (2)	-3 Speed Grade (3)	-4 Speed Grade	-5 Speed Grade	Unit
Larger designs	8-bit, 1024-point, quadrant output, four parallel FFT engines, buffered burst, three multipliers five adders FFT function	7385	60	36	359.58	352.98	312.01	278.00	MHz
	8-bit, 1024-point, quadrant output, four parallel FFT engines, buffered burst, four multipliers and two adders FFT function	6601	60	48	371.88	355.74	327.86	277.62	MHz

Notes for Table 5–36:

(1) These design performance numbers were obtained using the Quartus II software version 5.0 SP1.
(2) These numbers apply to -3 speed grade EP2S15, EP2S30, EP2S60, and EP2S90 devices.
(3) These numbers apply to -3 speed grade EP2S130 and EP2S180 devices.
(4) This application uses registered inputs and outputs.
(5) This application uses registered multiplier input and output stages within the DSP block.
(6) This application uses registered multiplier input, pipeline, and output stages within the DSP block.
(7) This application uses registered multiplier input with output of the multiplier stage feeding the accumulator or subtractor within the DSP block.
(8) This application uses the same clock source that is globally routed and connected to ports A and B.
(9) This application uses locally routed clocks or differently sourced clocks for ports A and B.

Internal Timing Parameters

See Tables 5–37 through 5–42 for internal timing parameters.

Table 5–37. LE_FF Internal Timing Microparameters

Symbol	Parameter	-3 Speed Grade *(1)*		-3 Speed Grade *(2)*		-4 Speed Grade		-5 Speed Grade		Unit
		Min *(3)*	Max	Min *(3)*	Max	Min *(4)*	Max	Min *(3)*	Max	
t_{SU}	LE register setup time before clock	90		95		104 104		121		ps
t_{H}	LE register hold time after clock	149		157		172 172		200		ps
t_{CO}	LE register clock-to-output delay	62	94	62	99	59 62	109	62	127	ps
t_{CLR}	Minimum clear pulse width	204		214		234 234		273		ps
t_{PRE}	Minimum preset pulse width	204		214		234 234		273		ps
t_{CLKL}	Minimum clock low time	612		642		703 703		820		ps
t_{CLKH}	Minimum clock high time	612		642		703 703		820		ps
t_{LUT}		162	378	162	397	162 170	435	162	507	ps
t_{ADDER}		354	619	354	650	354 372	712	354	829	ps

Notes to Table 5–37:

(1) These numbers apply to -3 speed grade EP2S15, EP2S30, EP2S60, and EP2S90 devices.

(2) These numbers apply to -3 speed grade EP2S130 and EP2S180 devices.

(3) For the -3 and -5 speed grades, the minimum timing is for the commercial temperature grade. Only -4 speed grade devices offer the industrial temperature grade.

(4) For the -4 speed grade, the first number is the minimum timing parameter for industrial devices. The second number is the minimum timing parameter for commercial devices.

Table 5–38. IOE Internal Timing Microparameters

Symbol	Parameter	-3 Speed Grade (1)		-3 Speed Grade (2)		-4 Speed Grade		-5 Speed Grade		Unit
		Min (3)	Max	Min (3)	Max	Min (4)	Max	Min (3)	Max	
t_{SU}	IOE input and output register setup time before clock	122		128		140 140		163		ps
t_{H}	IOE input and output register hold time after clock	72		75		82 82		96		ps
t_{CO}	IOE input and output register clock-to-output delay	101	169	101	177	97 101	194	101	226	ps
$t_{PIN2COMBOUT_R}$	Row input pin to IOE combinational output	410	760	410	798	391 410	873	410	1,018	ps
$t_{PIN2COMBOUT_C}$	Column input pin to IOE combinational output	428	787	428	825	408 428	904	428	1,054	ps
$t_{COMBIN2PIN_R}$	Row IOE data input to combinational output pin	1,101	2,026	1,101	2,127	1,049 1,101	2,329	1,101	2,439	ps
$t_{COMBIN2PIN_C}$	Column IOE data input to combinational output pin	991	1,854	991	1,946	944 991	2,131	991	2,246	ps
t_{CLR}	Minimum clear pulse width	200		210		229 229		268		ps
t_{PRE}	Minimum preset pulse width	200		210		229 229		268		ps
t_{CLKL}	Minimum clock low time	600		630		690 690		804		ps
t_{CLKH}	Minimum clock high time	600		630		690 690		804		ps

Notes to Table 5–38:

(1) These numbers apply to -3 speed grade EP2S15, EP2S30, EP2S60, and EP2S90 devices.

(2) These numbers apply to -3 speed grade EP2S130 and EP2S180 devices.

(3) For the -3 and -5 speed grades, the minimum timing is for the commercial temperature grade. Only -4 speed grade devices offer the industrial temperature grade.

(4) For the -4 speed grade, the first number is the minimum timing parameter for industrial devices. The second number is the minimum timing parameter for commercial devices.

Table 5–39. DSP Block Internal Timing Microparameters (Part 1 of 2)

Symbol	Parameter	-3 Speed Grade *(1)*		-3 Speed Grade *(2)*		-4 Speed Grade		-5 Speed Grade		Unit
		Min *(3)*	Max	Min *(3)*	Max	Min *(4)*	Max	Min *(3)*	Max	
t_{SU}	Input, pipeline, and output register setup time before clock	50		52		57 57		67		ps
t_{H}	Input, pipeline, and output register hold time after clock	180		189		206 206		241		ps
t_{CO}	Input, pipeline, and output register clock-to-output delay	0	0	0	0	0 0	0	0	0	ps
$t_{INREG2PIPE9}$	Input register to DSP block pipeline register in 9 × 9-bit mode	1,312	2,030	1,312	2,030	1,250 1,312	2,334	1,312	2,720	ps
$t_{INREG2PIPE18}$	Input register to DSP block pipeline register in 18 × 18-bit mode	1,302	2,010	1,302	2,110	1,240 1,302	2,311	1,302	2,693	ps
$t_{INREG2PIPE36}$	Input register to DSP block pipeline register in 36 × 36-bit mode	1,302	2,010	1,302	2,110	1,240 1,302	2,311	1,302	2,693	ps
$t_{PIPE2OUTREG2ADD}$	DSP block pipeline register to output register delay in two-multipliers adder mode	924	1,450	924	1,522	880 924	1,667	924	1,943	ps
$t_{PIPE2OUTREG4ADD}$	DSP block pipeline register to output register delay in four-multipliers adder mode	1,134	1,850	1,134	1,942	1,080 1,134	2,127	1,134	2,479	ps
t_{PD9}	Combinational input to output delay for 9 × 9	2,100	2,880	2,100	3,024	2,000 2,100	3,312	2,100	3,859	ps
t_{PD18}	Combinational input to output delay for 18 × 18	2,110	2,990	2,110	3,139	2,010 2,110	3,438	2,110	4,006	ps
t_{PD36}	Combinational input to output delay for 36 × 36	2,939	4,450	2,939	4,672	2,800 2,939	5,117	2,939	5,962	ps
t_{CLR}	Minimum clear pulse width	2,212		2,322		2,543 2,543		2,964		ps

Table 5–39. DSP Block Internal Timing Microparameters (Part 2 of 2)

Symbol	Parameter	-3 Speed Grade (1)		-3 Speed Grade (2)		-4 Speed Grade		-5 Speed Grade		Unit
		Min (3)	Max	Min (3)	Max	Min (4)	Max	Min (3)	Max	
t_{CLKL}	Minimum clock low time	1,190		1,249		1,368 1,368		1,594		ps
t_{CLKH}	Minimum clock high time	1,190		1,249		1,368 1,368		1,594		ps

Notes to Table 5–39:

(1) These numbers apply to -3 speed grade EP2S15, EP2S30, EP2S60, and EP2S90 devices.
(2) These numbers apply to -3 speed grade EP2S130 and EP2S180 devices.
(3) For the -3 and -5 speed grades, the minimum timing is for the commercial temperature grade. Only -4 speed grade devices offer the industrial temperature grade.
(4) For the -4 speed grade, the first number is the minimum timing parameter for industrial devices. The second number is the minimum timing parameter for commercial devices.

Table 5–40. M512 Block Internal Timing Microparameters (Part 1 of 2) *Note (1)*

Symbol	Parameter	-3 Speed Grade (2)		-3 Speed Grade (3)		-4 Speed Grade		-5 Speed Grade		Unit
		Min (4)	Max	Min (4)	Max	Min (5)	Max	Min (4)	Max	
t_{M512RC}	Synchronous read cycle time	2,089	2,318	2,089	2.433	1,989 2,089	2,664	2,089	3,104	ps
$t_{M512WERESU}$	Write or read enable setup time before clock	22		23		25 25		29		ps
$t_{M512WEREH}$	Write or read enable hold time after clock	203		213		233 233		272		ps
$t_{M512DATASU}$	Data setup time before clock	22		23		25 25		29		ps
$t_{M512DATAH}$	Data hold time after clock	203		213		233 233		272		ps
$t_{M512WADDRSU}$	Write address setup time before clock	22		23		25 25		29		ps
$t_{M512WADDRH}$	Write address hold time after clock	203		213		233 233		272		ps
$t_{M512RADDRSU}$	Read address setup time before clock	22		23		25 25		29		ps
$t_{M512RADDRH}$	Read address hold time after clock	203		213		233 233		272		ps

Table 5–40. M512 Block Internal Timing Microparameters (Part 2 of 2) *Note (1)*

Symbol	Parameter	-3 Speed Grade (2)		-3 Speed Grade (3)		-4 Speed Grade		-5 Speed Grade		Unit
		Min (4)	Max	Min (4)	Max	Min (5)	Max	Min (4)	Max	
$t_{M512DATACO1}$	Clock-to-output delay when using output registers	298	478	298	501	284 298	548	298	640	ps
$t_{M512DATACO2}$	Clock-to-output delay without output registers	2,102	2,345	2,102	2,461	2,003 2,102	2,695	2,102	3,141	ps
$t_{M512CLKL}$	Minimum clock low time	1,315		1,380		1,512 1,512		1,762		ps
$t_{M512CLKH}$	Minimum clock high time	1,315		1,380		1,512 1,512		1,762		ps
$t_{M512CLR}$	Minimum clear pulse width	144		151		165 165		192		ps

Notes to Table 5–40:

(1) F_{MAX} of M512 block obtained using the Quartus II software does not necessarily equal to 1/TM512RC.
(2) These numbers apply to -3 speed grade EP2S15, EP2S30, EP2S60, and EP2S90 devices.
(3) These numbers apply to -3 speed grade EP2S130 and EP2S180 devices.
(4) For the -3 and -5 speed grades, the minimum timing is for the commercial temperature grade. Only -4 speed grade devices offer the industrial temperature grade.
(5) For the -4 speed grade, the first number is the minimum timing parameter for industrial devices. The second number is the minimum timing parameter for commercial devices.

Table 5–41. M4K Block Internal Timing Microparameters (Part 1 of 2) *Note (1)*

Symbol	Parameter	-3 Speed Grade (2)		-3 Speed Grade (3)		-4 Speed Grade		-5 Speed Grade		Unit
		Min (4)	Max	Min (4)	Max	Min (5)	Max	Min (4)	Max	
t_{M4KRC}	Synchronous read cycle time	1,462	2,240	1,462	2,351	1,393 1,462	2,575	1,462	3,000	ps
$t_{M4KWERESU}$	Write or read enable setup time before clock	22		23		25 25		29		ps
$t_{M4KWEREH}$	Write or read enable hold time after clock	203		213		233 233		272		ps
$t_{M4KBESU}$	Byte enable setup time before clock	22		23		25 25		29		ps
t_{M4KBEH}	Byte enable hold time after clock	203		213		233 233		272		ps

Table 5–41. M4K Block Internal Timing Microparameters (Part 2 of 2) *Note (1)*

Symbol	Parameter	-3 Speed Grade (2)		-3 Speed Grade (3)		-4 Speed Grade		-5 Speed Grade		Unit
		Min (4)	Max	Min (4)	Max	Min (5)	Max	Min (4)	Max	
$t_{M4KDATAASU}$	A port data setup time before clock	22		23		25 25		29		ps
$t_{M4KDATAAH}$	A port data hold time after clock	203		213		233 233		272		ps
$t_{M4KADDRASU}$	A port address setup time before clock	22		23		25 25		29		ps
$t_{M4KADDRAH}$	A port address hold time after clock	203		213		233 233		272		ps
$t_{M4KDATABSU}$	B port data setup time before clock	22		23		25 25		29		ps
$t_{M4KDATABH}$	B port data hold time after clock	203		213		233 233		272		ps
$t_{M4KRADDRBSU}$	B port address setup time before clock	22		23		25 25		29		ps
$t_{M4KRADDRBH}$	B port address hold time after clock	203		213		233 233		272		ps
$t_{M4KDATACO1}$	Clock-to-output delay when using output registers	334	524	334	549	319 334	601	334	701	ps
$t_{M4KDATACO2}$ (6)	Clock-to-output delay without output registers	1,616	2,453	1,616	2,574	1,540 1,616	2,820	1,616	3,286	ps
$t_{M4KCLKH}$	Minimum clock high time	1,250		1,312		1,437 1,437		1,675		ps
$t_{M4KCLKL}$	Minimum clock low time	1,250		1,312		1,437 1,437		1,675		ps
t_{M4KCLR}	Minimum clear pulse width	144		151		165 165		192		ps

Notes to Table 5–41:

(1) F_{MAX} of M4K Block obtained using the Quartus II software does not necessarily equal to 1/TM4KRC.
(2) These numbers apply to -3 speed grade EP2S15, EP2S30, EP2S60, and EP2S90 devices.
(3) These numbers apply to -3 speed grade EP2S130 and EP2S180 devices.
(4) For the -3 and -5 speed grades, the minimum timing is for the commercial temperature grade. Only -4 speed grade devices offer the industrial temperature grade.
(5) For the -4 speed grade, the first number is the minimum timing parameter for industrial devices. The second number is the minimum timing parameter for commercial devices.
(6) Numbers apply to unpacked memory modes, true dual-port memory modes, and simple dual-port memory modes that use locally routed or non-identical sources for the A and B port registers.

Table 5–42. M-RAM Block Internal Timing Microparameters (Part 1 of 2) *Note (1)*

Symbol	Parameter	-3 Speed Grade (2)		-3 Speed Grade (3)		-4 Speed Grade		-5 Speed Grade		Unit
		Min (4)	Max	Min (4)	Max	Min (5)	Max	Min (4)	Max	
t_{MEGARC}	Synchronous read cycle time	1,866	2,774	1,866	2,911	1,777 1,866	3,189	1,777 1,866	3,716	ps
$t_{MEGAWERESU}$	Write or read enable setup time before clock	144		151		165 165		192		ps
$t_{MEGAWEREH}$	Write or read enable hold time after clock	39		40		44 44		52		ps
$t_{MEGABESU}$	Byte enable setup time before clock	50		52		57 57		67		ps
$t_{MEGABEH}$	Byte enable hold time after clock	39		40		44 44		52		ps
$t_{MEGADATAASU}$	A port data setup time before clock	50		52		57 57		67		ps
$t_{MEGADATAAH}$	A port data hold time after clock	243		255		279 279		325		ps
$t_{MEGAADDRASU}$	A port address setup time before clock	589		618		677 677		789		ps
$t_{MEGAADDRAH}$	A port address hold time after clock	241		253		277 277		322		ps
$t_{MEGADATABSU}$	B port setup time before clock	50		52		57 57		67		ps
$t_{MEGADATABH}$	B port hold time after clock	243		255		279 279		325		ps
$t_{MEGAADDRBSU}$	B port address setup time before clock	589		618		677 677		789		ps
$t_{MEGAADDRBH}$	B port address hold time after clock	241		253		277 277		322		ps
$t_{MEGADATACO1}$	Clock-to-output delay when using output registers	480	715	480	749	457 480	821	480	957	ps
$t_{MEGADATACO2}$	Clock-to-output delay without output registers	1,950	2,899	1,950	3,042	1,857 1,950	3,332	1,950	3,884	ps
$t_{MEGACLKL}$	Minimum clock low time	1,250		1,312		1,437 1,437		1,675		ps

Table 5–42. M-RAM Block Internal Timing Microparameters (Part 2 of 2) *Note (1)*

Symbol	Parameter	-3 Speed Grade (2)		-3 Speed Grade (3)		-4 Speed Grade		-5 Speed Grade		Unit
		Min (4)	Max	Min (4)	Max	Min (5)	Max	Min (4)	Max	
$t_{MEGACLKH}$	Minimum clock high time	1,250		1,312		1,437 1,437		1,675		ps
$t_{MEGACLR}$	Minimum clear pulse width	144		151		165 165		192		ps

Notes to Table 5–42:

(1) F_{MAX} of M-RAM Block obtained using the Quartus II software does not necessarily equal to 1/TMEGARC.
(2) These numbers apply to -3 speed grade EP2S15, EP2S30, EP2S60, and EP2S90 devices.
(3) These numbers apply to -3 speed grade EP2S130 and EP2S180 devices.
(4) For the -3 and -5 speed grades, the minimum timing is for the commercial temperature grade. Only -4 speed grade devices offer the industrial temperature grade.
(5) For the -4 speed grade, the first number is the minimum timing parameter for industrial devices. The second number is the minimum timing parameter for commercial devices.

Stratix II Clock Timing Parameters

See Tables 5–43 through 5–67 for Stratix II clock timing parameters.

Table 5–43. Stratix II Clock Timing Parameters

Symbol	Parameter
t_{CIN}	Delay from clock pad to I/O input register
t_{COUT}	Delay from clock pad to I/O output register
t_{PLLCIN}	Delay from PLL `inclk` pad to I/O input register
$t_{PLLCOUT}$	Delay from PLL `inclk` pad to I/O output register

EP2S15 Clock Timing Parameters

Tables 5–44 though 5–47 show the maximum clock timing parameters for EP2S15 devices.

Table 5–44. EP2S15 Column Pins Regional Clock Timing Parameters

Parameter	Minimum Timing		-3 Speed Grade	-4 Speed Grade	-5 Speed Grade	Unit
	Industrial	Commercial				
t_{CIN}	1.445	1.512	2.487	2.848	3.309	ns
t_{COUT}	1.288	1.347	2.245	2.570	2.985	ns
t_{PLLCIN}	0.104	0.102	0.336	0.373	0.424	ns
$t_{PLLCOUT}$	-0.053	-0.063	0.094	0.095	0.1	ns

Table 5–45. EP2S15 Column Pins Global Clock Timing Parameters

Parameter	Minimum Timing		-3 Speed Grade	-4 Speed Grade	-5 Speed Grade	Unit
	Industrial	Commercial				
t_{CIN}	1.419	1.487	2.456	2.813	3.273	ns
t_{COUT}	1.262	1.322	2.214	2.535	2.949	ns
t_{PLLCIN}	0.094	0.092	0.326	0.363	0.414	ns
$t_{PLLCOUT}$	-0.063	-0.073	0.084	0.085	0.09	ns

Table 5–46. EP2S15 Row Pins Regional Clock Timing Parameters

Parameter	Minimum Timing		-3 Speed Grade	-4 Speed Grade	-5 Speed Grade	Unit
	Industrial	Commercial				
t_{CIN}	1.232	1.288	2.144	2.454	2.848	ns
t_{COUT}	1.237	1.293	2.140	2.450	2.843	ns
t_{PLLCIN}	-0.109	-0.122	-0.007	-0.021	-0.037	ns
$t_{PLLCOUT}$	-0.104	-0.117	-0.011	-0.025	-0.042	ns

Table 5–47. EP2S15 Row Pins Global Clock Timing Parameters

Parameter	Minimum Timing		-3 Speed Grade	-4 Speed Grade	-5 Speed Grade	Unit
	Industrial	Commercial				
t_{CIN}	1.206	1.262	2.113	2.422	2.815	ns
t_{COUT}	1.211	1.267	2.109	2.418	2.810	ns
t_{PLLCIN}	-0.125	-0.138	-0.023	-0.038	-0.056	ns
$t_{PLLCOUT}$	-0.12	-0.133	-0.027	-0.042	-0.061	ns

EP2S30 Clock Timing Parameters

Tables 5–48 through 5–51 show the maximum clock timing parameters for EP2S30 devices.

Table 5–48. EP2S30 Column Pins Regional Clock Timing Parameters

Parameter	Minimum Timing		-3 Speed Grade	-4 Speed Grade	-5 Speed Grade	Unit
	Industrial	Commercial				
t_{CIN}	1.553	1.627	2.639	3.025	3.509	ns
t_{COUT}	1.396	1.462	2.397	2.747	3.185	ns
t_{PLLCIN}	0.114	0.113	0.225	0.248	0.28	ns
$t_{PLLCOUT}$	-0.043	-0.052	-0.017	-0.03	-0.044	ns

Table 5–49. EP2S30 Column Pins Global Clock Timing Parameters

Parameter	Minimum Timing		-3 Speed Grade	-4 Speed Grade	-5 Speed Grade	Unit
	Industrial	Commercial				
t_{CIN}	1.539	1.613	2.622	3.008	3.501	ns
t_{COUT}	1.382	1.448	2.380	2.730	3.177	ns
t_{PLLCIN}	0.101	0.098	0.209	0.229	0.267	ns
$t_{PLLCOUT}$	-0.056	-0.067	-0.033	-0.049	-0.057	ns

Table 5–50. EP2S30 Row Pins Regional Clock Timing Parameters

Parameter	Minimum Timing		-3 Speed Grade	-4 Speed Grade	-5 Speed Grade	Unit
	Industrial	Commercial				
t_{CIN}	1.304	1.184	1.966	2.251	2.616	ns
t_{COUT}	1.309	1.189	1.962	2.247	2.611	ns
t_{PLLCIN}	-0.135	–0.158	–0.208	–0.254	–0.302	ns
$t_{PLLCOUT}$	-0.13	–0.153	–0.212	–0.258	–0.307	ns

Table 5–51. EP2S30 Row Pins Global Clock Timing Parameters

Parameter	Minimum Timing		-3 Speed Grade	-4 Speed Grade	-5 Speed Grade	Unit
	Industrial	Commercial				
t_{CIN}	1.289	1.352	2.238	2.567	2.990	ns
t_{COUT}	1.294	1.357	2.234	2.563	2.985	ns
t_{PLLCIN}	-0.14	-0.154	-0.169	-0.205	-0.254	ns
$t_{PLLCOUT}$	-0.135	-0.149	-0.173	-0.209	-0.259	ns

EP2S60 Clock Timing Parameters

Tables 5–52 through 5–55 show the maximum clock timing parameters for EP2S60 devices.

Table 5–52. EP2S60 Column Pins Regional Clock Timing Parameters

Parameter	Minimum Timing		-3 Speed Grade	-4 Speed Grade	-5 Speed Grade	Unit
	Industrial	Commercial				
t_{CIN}	1.681	1.762	2.945	3.381	3.931	ns
t_{COUT}	1.524	1.597	2.703	3.103	3.607	ns
t_{PLLCIN}	0.066	0.064	0.279	0.311	0.348	ns
$t_{PLLCOUT}$	-0.091	-0.101	0.037	0.033	0.024	ns

Table 5–53. EP2S60 Column Pins Global Clock Timing Parameters

Parameter	Minimum Timing		-3 Speed Grade	-4 Speed Grade	-5 Speed Grade	Unit
	Industrial	Commercial				
t_{CIN}	1.658	1.739	2.920	3.350	3.899	ns
t_{COUT}	1.501	1.574	2.678	3.072	3.575	ns
t_{PLLCIN}	0.06	0.057	0.278	0.304	0.355	ns
$t_{PLLCOUT}$	-0.097	-0.108	0.036	0.026	0.031	ns

Table 5–54. EP2S60 Row Pins Regional Clock Timing Parameters

Parameter	Minimum Timing		-3 Speed Grade	-4 Speed Grade	-5 Speed Grade	Unit
	Industrial	Commercial				
t_{CIN}	1.463	1.532	2.591	2.972	3.453	ns
t_{COUT}	1.468	1.537	2.587	2.968	3.448	ns
t_{PLLCIN}	-0.153	-0.167	-0.079	-0.099	-0.128	ns
$t_{PLLCOUT}$	-0.148	-0.162	-0.083	-0.103	-0.133	ns

Table 5–55. EP2S60 Row Pins Global Clock Timing Parameters

Parameter	Minimum Timing		-3 Speed Grade	-4 Speed Grade	-5 Speed Grade	Unit
	Industrial	Commercial				
t_{CIN}	1.439	1.508	2.562	2.940	3.421	ns
t_{COUT}	1.444	1.513	2.558	2.936	3.416	ns
t_{PLLCIN}	-0.161	-0.174	-0.083	-0.107	-0.126	ns
$t_{PLLCOUT}$	-0.156	-0.169	-0.087	-0.111	-0.131	ns

EP2S90 Clock Timing Parameters

Tables 5–56 through 5–59 show the maximum clock timing parameters for EP2S90 devices.

Table 5–56. EP2S90 Column Pins Regional Clock Timing Parameters

Parameter	Minimum Timing		-3 Speed Grade	-4 Speed Grade	-5 Speed Grade	Unit
	Industrial	Commercial				
t_{CIN}	1.768	1.850	3.033	3.473	4.040	ns
t_{COUT}	1.611	1.685	2.791	3.195	3.716	ns
t_{PLLCIN}	-0.127	-0.117	0.125	0.129	0.144	ns
$t_{PLLCOUT}$	-0.284	-0.282	-0.117	-0.149	-0.18	ns

Table 5–57. EP2S90 Column Pins Global Clock Timing Parameters

Parameter	Minimum Timing		-3 Speed Grade	-4 Speed Grade	-5 Speed Grade	Unit
	Industrial	Commercial				
t_{CIN}	1.783	1.868	3.058	3.502	4.070	ns
t_{COUT}	1.626	1.703	2.816	3.224	3.746	ns
t_{PLLCIN}	-0.137	-0.127	0.115	0.119	0.134	ns
$t_{PLLCOUT}$	-0.294	-0.292	-0.127	-0.159	-0.19	ns

Table 5–58. EP2S90 Row Pins Regional Clock Timing Parameters

Parameter	Minimum Timing		-3 Speed Grade	-4 Speed Grade	-5 Speed Grade	Unit
	Industrial	Commercial				
t_{CIN}	1.566	1.638	2.731	3.124	3.632	ns
t_{COUT}	1.571	1.643	2.727	3.120	3.627	ns
t_{PLLCIN}	-0.326	-0.326	-0.178	-0.218	-0.264	ns
$t_{PLLCOUT}$	-0.321	-0.321	-0.182	-0.222	-0.269	ns

Table 5–59. EP2S90 Row Pins Global Clock Timing Parameters

Parameter	Minimum Timing		-3 Speed Grade	-4 Speed Grade	-5 Speed Grade	Unit
	Industrial	Commercial				
t_{CIN}	1.585	1.658	2.757	3.154	3.665	ns
t_{COUT}	1.590	1.663	2.753	3.150	3.660	ns
t_{PLLCIN}	-0.341	-0.341	-0.193	-0.235	-0.278	ns
$t_{PLLCOUT}$	-0.336	-0.336	-0.197	-0.239	-0.283	ns

EP2S130 Clock Timing Parameters

Tables 5–60 through 5–63 show the maximum clock timing parameters for EP2S130 devices.

Table 5–60. EP2S130 Column Pins Regional Clock Timing Parameters

Parameter	Minimum Timing		-3 Speed Grade	-4 Speed Grade	-5 Speed Grade	Unit
	Industrial	Commercial				
t_{CIN}	1.889	1.981	3.405	3.722	4.326	ns
t_{COUT}	1.732	1.816	3.151	3.444	4.002	ns
t_{PLLCIN}	0.105	0.106	0.226	0.242	0.277	ns
$t_{PLLCOUT}$	-0.052	-0.059	-0.028	-0.036	-0.047	ns

Table 5–61. EP2S130 Column Pins Global Clock Timing Parameters

Parameter	Minimum Timing		-3 Speed Grade	-4 Speed Grade	-5 Speed Grade	Unit
	Industrial	Commercial				
t_{CIN}	1.907	1.998	3.420	3.740	4.348	ns
t_{COUT}	1.750	1.833	3.166	3.462	4.024	ns
t_{PLLCIN}	0.134	0.136	0.276	0.296	0.338	ns
$t_{PLLCOUT}$	-0.023	-0.029	0.022	0.018	0.014	ns

Table 5–62. EP2S130 Row Pins Regional Clock Timing Parameters

Parameter	Minimum Timing		-3 Speed Grade	-4 Speed Grade	-5 Speed Grade	Unit
	Industrial	Commercial				
t_{CIN}	1.680	1.760	3.070	3.351	3.892	ns
t_{COUT}	1.685	1.765	3.066	3.347	3.887	ns
t_{PLLCIN}	-0.113	-0.124	-0.12	-0.138	-0.168	ns
$t_{PLLCOUT}$	-0.108	-0.119	-0.124	-0.142	-0.173	ns

Table 5–63. EP2S130 Row Pins Global Clock Timing Parameters

Parameter	Minimum Timing		-3 Speed Grade	-4 Speed Grade	-5 Speed Grade	Unit
	Industrial	Commercial				
t_{CIN}	1.690	1.770	3.075	3.362	3.905	ns
t_{COUT}	1.695	1.775	3.071	3.358	3.900	ns
t_{PLLCIN}	-0.087	-0.097	-0.075	-0.089	-0.11	ns
$t_{PLLCOUT}$	-0.082	-0.092	-0.079	-0.093	-0.115	ns

EP2S180 Clock Timing Parameters

Tables 5–64 through 5–67 show the maximum clock timing parameters for EP2S180 devices.

Table 5–64. EP2S180 Column Pins Regional Clock Timing Parameters

Parameter	Minimum Timing		-3 Speed Grade	-4 Speed Grade	-5 Speed Grade	Unit
	Industrial	Commercial				
t_{CIN}	2.001	2.095	3.643	3.984	4.634	ns
t_{COUT}	1.844	1.930	3.389	3.706	4.310	ns
t_{PLLCIN}	-0.307	-0.297	0.053	0.046	0.048	ns
$t_{PLLCOUT}$	-0.464	-0.462	-0.201	-0.232	-0.276	ns

Table 5–65. EP2S180 Column Pins Global Clock Timing Parameters

Parameter	Minimum Timing		-3 Speed Grade	-4 Speed Grade	-5 Speed Grade	Unit
	Industrial	Commercial				
t_{CIN}	2.003	2.100	3.652	3.993	4.648	ns
t_{COUT}	1.846	1.935	3.398	3.715	4.324	ns
t_{PLLCIN}	-0.3	-0.29	0.053	0.054	0.058	ns
$t_{PLLCOUT}$	-0.457	-0.455	-0.201	-0.224	-0.266	ns

Table 5–66. EP2S180 Row Pins Regional Clock Timing Parameters

Parameter	Minimum Timing		-3 Speed Grade	-4 Speed Grade	-5 Speed Grade	Unit
	Industrial	Commercial				
t_{CIN}	1.759	1.844	3.273	3.577	4.162	ns
t_{COUT}	1.764	1.849	3.269	3.573	4.157	ns
t_{PLLCIN}	-0.542	-0.541	-0.317	-0.353	-0.414	ns
$t_{PLLCOUT}$	-0.537	-0.536	-0.321	-0.357	-0.419	ns

Table 5–67. EP2S180 Row Pins Global Clock Timing Parameters

Parameter	Minimum Timing		-3 Speed Grade	-4 Speed Grade	-5 Speed Grade	Unit
	Industrial	Commercial				
t_{CIN}	1.763	1.850	3.285	3.588	4.176	ns
t_{COUT}	1.768	1.855	3.281	3.584	4.171	ns
t_{PLLCIN}	-0.542	-0.542	-0.319	-0.355	-0.42	ns
$t_{PLLCOUT}$	-0.537	-0.537	-0.323	-0.359	-0.425	ns

Clock Network Skew Adders

The Quartus II software models skew within dedicated clock networks such as global and regional clocks. Therefore, intra-clock network skew adder is not specified. Table 5–68 specifies the clock skew between any two clock networks driving registers in the IOE.

Table 5–68. Clock Network Specifications

Name	Description	Min	Typ	Max	Unit
Clock skew adder EP2S15, EP2S30, EP2S60 *(1)*	Inter-clock network, same side			±50	ps
	Inter-clock network, entire chip			±100	ps
Clock skew adder EP2S90 *(1)*	Inter-clock network, same side			±55	ps
	Inter-clock network, entire chip			±110	ps
Clock skew adder EP2S130 *(1)*	Inter-clock network, same side			±63	ps
	Inter-clock network, entire chip			±125	ps
Clock skew adder EP2S180 *(1)*	Inter-clock network, same side			±75	ps
	Inter-clock network, entire chip			±150	ps

Note to Table 5–68:
(1) This is in addition to intra-clock network skew, which is modeled in the Quartus II software.

IOE Programmable Delay

See Tables 5–69 and 5–70 for IOE programmable delay.

Table 5–69. Stratix II IOE Programmable Delay on Column Pins *Note (1)*

Parameter	Paths Affected	Available Settings	Minimum Timing *(2)*		-3 Speed Grade *(3)*		-4 Speed Grade		-5 Speed Grade	
			Min Offset (ps)	Max Offset (ps)	Min Offset (ps)	Max Offset (ps)	Min Offset (ps)	Max Offset (ps)	Min Offset (ps)	Max Offset (ps)
Input delay from pin to internal cells	Pad to I/O dataout to logic array	8	0 0	1,696 1,781	0 0	2,881 3,025	0	3,313	0	3,860
Input delay from pin to input register	Pad to I/O input register	64	0 0	1,955 2,053	0 0	3,275 3,439	0	3,766	0	4,388
Delay from output register to output pin	I/O output register to pad	2	0 0	316 332	0 0	500 525	0	575	0	670
Output enable pin delay	t_{XZ}, t_{ZX}	2	0 0	305 320	0 0	483 507	0	556	0	647

Notes to Table 5–69:

(1) The incremental values for the settings are generally linear. For the exact delay associated with each setting, use the latest version of the Quartus II software.

(2) The first number is the minimum timing parameter for industrial devices. The second number is the minimum timing parameter for commercial devices.

(3) The first number applies to -3 speed grade EP2S15, EP2S30, EP2S60, and EP2S90 devices. The second number applies to -3 speed grade EP2S130 and EP2S180 devices.

Table 5–70. Stratix II IOE Programmable Delay on Row Pins *Note (1)*

Parameter	Paths Affected	Available Settings	Minimum Timing *(2)*		-3 Speed Grade *(3)*		-4 Speed Grade		-5 Speed Grade	
			Min Offset (ps)	Max Offset (ps)	Min Offset (ps)	Max Offset (ps)	Min Offset (ps)	Max Offset (ps)	Min Offset (ps)	Max Offset (ps)
Input delay from pin to internal cells	Pad to I/O dataout to logic array	8	0 0	1,697 1,782	0 0	2,876 3,020	0	3,308	0	3,853
Input delay from pin to input register	Pad to I/O input register	64	0 0	1,956 2,054	0 0	3,270 3,434	0	3,761	0	4,381
Delay from output register to output pin	I/O output register to pad	2	0 0	316 332	0 0	525 525	0	575	0	670
Output enable pin delay	t_{XZ}, t_{ZX}	2	0 0	305 320	0 0	507 507	0	556	0	647

Notes to Table 5–70:

(1) The incremental values for the settings are generally linear. For the exact delay associated with each setting, use the latest version of the Quartus II software.

(2) The first number is the minimum timing parameter for industrial devices. The second number is the minimum timing parameter for commercial devices.

(3) The first number applies to -3 speed grade EP2S15, EP2S30, EP2S60, and EP2S90 devices. The second number applies to -3 speed grade EP2S130 and EP2S180 devices.

Default Capacitive Loading of Different I/O Standards

See Table 5–71 for default capacitive loading of different I/O standards.

Table 5–71. Default Loading of Different I/O Standards for Stratix II (Part 1 of 2)

I/O Standard	Capacitive Load	Unit
LVTTL	0	pF
LVCMOS	0	pF
2.5 V	0	pF
1.8 V	0	pF
1.5 V	0	pF
PCI	10	pF
PCI-X	10	pF
SSTL-2 Class I	0	pF

Table 5–71. Default Loading of Different I/O Standards for Stratix II (Part 2 of 2)

I/O Standard	Capacitive Load	Unit
SSTL-2 Class II	0	pF
SSTL-18 Class I	0	pF
SSTL-18 Class II	0	pF
1.5-V HSTL Class I	0	pF
1.5-V HSTL Class II	0	pF
1.8-V HSTL Class I	0	pF
1.8-V HSTL Class II	0	pF
1.2-V HSTL with OCT	0	pF
Differential SSTL-2 Class I	0	pF
Differential SSTL-2 Class II	0	pF
Differential SSTL-18 Class I	0	pF
Differential SSTL-18 Class II	0	pF
1.5-V Differential HSTL Class I	0	pF
1.5-V Differential HSTL Class II	0	pF
1.8-V Differential HSTL Class I	0	pF
1.8-V Differential HSTL Class II	0	pF
LVDS	0	pF
HyperTransport	0	pF
LVPECL	0	pF

I/O Delays

See Tables 5–72 through 5–76 for I/O delays.

Table 5–72. I/O Delay Parameters

Symbol	Parameter
t_{DIP}	Delay from I/O datain to output pad
t_{OP}	Delay from I/O output register to output pad
t_{PCOUT}	Delay from input pad to I/O dataout to core
t_{PI}	Delay from input pad to I/O input register

Table 5–73. Stratix II I/O Input Delay for Column Pins (Part 1 of 3)

I/O Standard	Parameter	Minimum Timing		-3 Speed Grade (2)	-3 Speed Grade (3)	-4 Speed Grade	-5 Speed Grade	Unit
		Industrial	Commercial					
LVTTL	t_{PI}	674	707	1223	1282	1405	1637	ps
	t_{PCOUT}	408	428	787	825	904	1054	ps
2.5 V	t_{PI}	684	717	1210	1269	1390	1619	ps
	t_{PCOUT}	418	438	774	812	889	1036	ps
1.8 V	t_{PI}	747	783	1366	1433	1570	1829	ps
	t_{PCOUT}	481	504	930	976	1069	1246	ps
1.5 V	t_{PI}	749	786	1436	1506	1650	1922	ps
	t_{PCOUT}	483	507	1000	1049	1149	1339	ps
LVCMOS	t_{PI}	674	707	1223	1282	1405	1637	ps
	t_{PCOUT}	408	428	787	825	904	1054	ps
SSTL-2 Class I	t_{PI}	507	530	818	857	939	1094	ps
	t_{PCOUT}	241	251	382	400	438	511	ps
SSTL-2 Class II	t_{PI}	507	530	818	857	939	1094	ps
	t_{PCOUT}	241	251	382	400	438	511	ps
SSTL-18 Class I	t_{PI}	543	569	898	941	1031	1201	ps
	t_{PCOUT}	277	290	462	484	530	618	ps
SSTL-18 Class II	t_{PI}	543	569	898	941	1031	1201	ps
	t_{PCOUT}	277	290	462	484	530	618	ps
1.5-V HSTL Class I	t_{PI}	560	587	993	1041	1141	1329	ps
	t_{PCOUT}	294	308	557	584	640	746	ps

Table 5–73. Stratix II I/O Input Delay for Column Pins (Part 2 of 3)

I/O Standard	Parameter	Minimum Timing		-3 Speed Grade (2)	-3 Speed Grade (3)	-4 Speed Grade	-5 Speed Grade	Unit
		Industrial	Commercial					
1.5-V HSTL Class II	t_{PI}	560	587	993	1041	1141	1329	ps
	t_{PCOUT}	294	308	557	584	640	746	ps
1.8-V HSTL Class I	t_{PI}	543	569	898	941	1031	1201	ps
	t_{PCOUT}	277	290	462	484	530	618	ps
1.8-V HSTL Class II	t_{PI}	543	569	898	941	1031	1201	ps
	t_{PCOUT}	277	290	462	484	530	618	ps
PCI	t_{PI}	679	712	1214	1273	1395	1625	ps
	t_{PCOUT}	413	433	778	816	894	1042	ps
PCI-X	t_{PI}	679	712	1214	1273	1395	1625	ps
	t_{PCOUT}	413	433	778	816	894	1042	ps
Differential SSTL-2 Class I (1)	t_{PI}	507	530	818	857	939	1094	ps
	t_{PCOUT}	241	251	382	400	438	511	ps
Differential SSTL-2 Class II (1)	t_{PI}	507	530	818	857	939	1094	ps
	t_{PCOUT}	241	251	382	400	438	511	ps
Differential SSTL-18 Class I (1)	t_{PI}	543	569	898	941	1031	1201	ps
	t_{PCOUT}	277	290	462	484	530	618	ps
Differential SSTL-18 Class II (1)	t_{PI}	543	569	898	941	1031	1201	ps
	t_{PCOUT}	277	290	462	484	530	618	ps
1.8-V Differential HSTL Class I (1)	t_{PI}	543	569	898	941	1031	1201	ps
	t_{PCOUT}	277	290	462	484	530	618	ps
1.8-V Differential HSTL Class II (1)	t_{PI}	543	569	898	941	1031	1201	ps
	t_{PCOUT}	277	290	462	484	530	618	ps
1.5-V Differential HSTL Class I (1)	t_{PI}	560	587	993	1041	1141	1329	ps
	t_{PCOUT}	294	308	557	584	640	746	ps
1.5-V Differential HSTL Class II (1)	t_{PI}	560	587	993	1041	1141	1329	ps
	t_{PCOUT}	294	308	557	584	640	746	ps

Table 5–73. Stratix II I/O Input Delay for Column Pins (Part 3 of 3)

I/O Standard	Parameter	Minimum Timing		-3 Speed Grade (2)	-3 Speed Grade (3)	-4 Speed Grade	-5 Speed Grade	Unit
		Industrial	Commercial					
1.2-V HSTL	t_{PI}	645	677	1194	1252	-	-	ps
	t_{PCOUT}	379	398	758	795	-	-	ps

Notes for Table 5–73:
(1) These I/O standards are only supported on DQS pins.
(2) These numbers apply to -3 speed grade EP2S15, EP2S30, EP2S60, and EP2S90 devices.
(3) These numbers apply to -3 speed grade EP2S130 and EP2S180 devices.

Table 5–74. Stratix II I/O Input Delay for Row Pins (Part 1 of 2)

I/O Standard	Parameter	Minimum Timing		-3 Speed Grade (1)	-3 Speed Grade (2)	-4 Speed Grade	-5 Speed Grade	Unit
		Industrial	Commercial					
LVTTL	t_{PI}	715	749	1287	1350	1477	1723	ps
	t_{PCOUT}	391	410	760	798	873	1018	ps
2.5 V	t_{PI}	726	761	1273	1335	1461	1704	ps
	t_{PCOUT}	402	422	746	783	857	999	ps
1.8 V	t_{PI}	788	827	1427	1497	1639	1911	ps
	t_{PCOUT}	464	488	900	945	1035	1206	ps
1.5 V	t_{PI}	792	830	1498	1571	1720	2006	ps
	t_{PCOUT}	468	491	971	1019	1116	1301	ps
LVCMOS	t_{PI}	715	749	1287	1350	1477	1723	ps
	t_{PCOUT}	391	410	760	798	873	1018	ps
SSTL-2 Class I	t_{PI}	547	573	879	921	1008	1176	ps
	t_{PCOUT}	223	234	352	369	404	471	ps
SSTL-2 Class II	t_{PI}	547	573	879	921	1008	1176	ps
	t_{PCOUT}	223	234	352	369	404	471	ps
SSTL-18 Class I	t_{PI}	577	605	960	1006	1101	1285	ps
	t_{PCOUT}	253	266	433	454	497	580	ps
SSTL-18 Class II	t_{PI}	577	605	960	1006	1101	1285	ps
	t_{PCOUT}	253	266	433	454	497	580	ps
1.5-V HSTL Class I	t_{PI}	602	631	1056	1107	1212	1413	ps
	t_{PCOUT}	278	292	529	555	608	708	ps

Table 5–74. Stratix II I/O Input Delay for Row Pins (Part 2 of 2)

I/O Standard	Parameter	Minimum Timing		-3 Speed Grade (1)	-3 Speed Grade (2)	-4 Speed Grade	-5 Speed Grade	Unit
		Industrial	Commercial					
1.5-V HSTL Class II	t_{PI}	602	631	1056	1107	1212	1413	ps
	t_{PCOUT}	278	292	529	555	608	708	ps
1.8-V HSTL Class I	t_{PI}	577	605	960	1006	1101	1285	ps
	t_{PCOUT}	253	266	433	454	497	580	ps
1.8-V HSTL Class II	t_{PI}	577	605	960	1006	1101	1285	ps
	t_{PCOUT}	253	266	433	454	497	580	ps
LVDS	t_{PI}	515	540	948	994	1088	1269	ps
	t_{PCOUT}	191	201	421	442	484	564	ps
HyperTransport	t_{PI}	515	540	948	994	1088	1269	ps
	t_{PCOUT}	191	201	421	442	484	564	ps

Notes for Table 5–74:
(1) These numbers apply to -3 speed grade EP2S15, EP2S30, EP2S60, and EP2S90 devices.
(2) These numbers apply to -3 speed grade EP2S130 and EP2S180 devices.

Table 5–75. Stratix II I/O Output Delay for Column Pins (Part 1 of 8)

I/O Standard	Drive Strength	Parameter	Minimum Timing		-3 Speed Grade (3)	-3 Speed Grade (4)	-4 Speed Grade	-5 Speed Grade	Unit
			Industrial	Commercial					
LVTTL	4 mA	t_{OP}	1178	1236	2351	2467	2702	2820	ps
		t_{DIP}	1198	1258	2417	2537	2778	2910	ps
	8 mA	t_{OP}	1041	1091	2036	2136	2340	2448	ps
		t_{DIP}	1061	1113	2102	2206	2416	2538	ps
	12 mA	t_{OP}	976	1024	2036	2136	2340	2448	ps
		t_{DIP}	996	1046	2102	2206	2416	2538	ps
	16 mA	t_{OP}	951	998	1893	1986	2176	2279	ps
		t_{DIP}	971	1020	1959	2056	2252	2369	ps
	20 mA	t_{OP}	931	976	1787	1875	2054	2154	ps
		t_{DIP}	951	998	1853	1945	2130	2244	ps
	24 mA (1)	t_{OP}	924	969	1788	1876	2055	2156	ps
		t_{DIP}	944	991	1854	1946	2131	2246	ps

Table 5–75. Stratix II I/O Output Delay for Column Pins (Part 2 of 8)

I/O Standard	Drive Strength	Parameter	Minimum Timing		-3 Speed Grade (3)	-3 Speed Grade (4)	-4 Speed Grade	-5 Speed Grade	Unit
			Industrial	Commercial					
LVCMOS	4 mA	t_{OP}	1041	1091	2036	2136	2340	2448	ps
		t_{DIP}	1061	1113	2102	2206	2416	2538	ps
	8 mA	t_{OP}	952	999	1786	1874	2053	2153	ps
		t_{DIP}	972	1021	1852	1944	2129	2243	ps
	12 mA	t_{OP}	926	971	1720	1805	1977	2075	ps
		t_{DIP}	946	993	1786	1875	2053	2165	ps
	16 mA	t_{OP}	933	978	1693	1776	1946	2043	ps
		t_{DIP}	953	1000	1759	1846	2022	2133	ps
	20 mA	t_{OP}	921	965	1677	1759	1927	2025	ps
		t_{DIP}	941	987	1743	1829	2003	2115	ps
	24 mA (1)	t_{OP}	909	954	1659	1741	1906	2003	ps
		t_{DIP}	929	976	1725	1811	1982	2093	ps
2.5 V	4 mA	t_{OP}	1004	1053	2063	2165	2371	2480	ps
		t_{DIP}	1024	1075	2129	2235	2447	2570	ps
	8 mA	t_{OP}	955	1001	1841	1932	2116	2218	ps
		t_{DIP}	975	1023	1907	2002	2192	2308	ps
	12 mA	t_{OP}	934	980	1742	1828	2002	2101	ps
		t_{DIP}	954	1002	1808	1898	2078	2191	ps
	16 mA (1)	t_{OP}	918	962	1679	1762	1929	2027	ps
		t_{DIP}	938	984	1745	1832	2005	2117	ps

Table 5–75. Stratix II I/O Output Delay for Column Pins (Part 3 of 8)

I/O Standard	Drive Strength	Parameter	Minimum Timing		-3 Speed Grade (3)	-3 Speed Grade (4)	-4 Speed Grade	-5 Speed Grade	Unit
			Industrial	Commercial					
1.8 V	2 mA	t_{OP}	1042	1093	2904	3048	3338	3472	ps
		t_{DIP}	1062	1115	2970	3118	3414	3562	ps
	4 mA	t_{OP}	1047	1098	2248	2359	2584	2698	ps
		t_{DIP}	1067	1120	2314	2429	2660	2788	ps
	6 mA	t_{OP}	974	1022	2024	2124	2326	2434	ps
		t_{DIP}	994	1044	2090	2194	2402	2524	ps
	8 mA	t_{OP}	976	1024	1947	2043	2238	2343	ps
		t_{DIP}	996	1046	2013	2113	2314	2433	ps
	10 mA	t_{OP}	933	978	1882	1975	2163	2266	ps
		t_{DIP}	953	1000	1948	2045	2239	2356	ps
	12 mA (1)	t_{OP}	934	979	1833	1923	2107	2209	ps
		t_{DIP}	954	1001	1899	1993	2183	2299	ps
1.5 V	2 mA	t_{OP}	1023	1073	2505	2629	2879	3002	ps
		t_{DIP}	1043	1095	2571	2699	2955	3092	ps
	4 mA	t_{OP}	963	1009	2023	2123	2325	2433	ps
		t_{DIP}	983	1031	2089	2193	2401	2523	ps
	6 mA	t_{OP}	966	1012	1923	2018	2210	2315	ps
		t_{DIP}	986	1034	1989	2088	2286	2405	ps
	8 mA (1)	t_{OP}	926	971	1878	1970	2158	2262	ps
		t_{DIP}	946	993	1944	2040	2234	2352	ps
SSTL-2 Class I	8 mA	t_{OP}	913	957	1715	1799	1971	2041	ps
		t_{DIP}	933	979	1781	1869	2047	2131	ps
	12 mA (1)	t_{OP}	896	940	1672	1754	1921	1991	ps
		t_{DIP}	916	962	1738	1824	1997	2081	ps
SSTL-2 Class II	16 mA	t_{OP}	876	918	1609	1688	1849	1918	ps
		t_{DIP}	896	940	1675	1758	1925	2008	ps
	20 mA	t_{OP}	877	919	1598	1676	1836	1905	ps
		t_{DIP}	897	941	1664	1746	1912	1995	ps
	24 mA (1)	t_{OP}	872	915	1596	1674	1834	1903	ps
		t_{DIP}	892	937	1662	1744	1910	1993	ps

Table 5–75. Stratix II I/O Output Delay for Column Pins (Part 4 of 8)

I/O Standard	Drive Strength	Parameter	Minimum Timing		-3 Speed Grade (3)	-3 Speed Grade (4)	-4 Speed Grade	-5 Speed Grade	Unit
			Industrial	Commercial					
SSTL-18 Class I	4 mA	t_{OP}	909	953	1690	1773	1942	2012	ps
		t_{DIP}	929	975	1756	1843	2018	2102	ps
	6 mA	t_{OP}	914	958	1656	1737	1903	1973	ps
		t_{DIP}	934	980	1722	1807	1979	2063	ps
	8 mA	t_{OP}	894	937	1640	1721	1885	1954	ps
		t_{DIP}	914	959	1706	1791	1961	2044	ps
	10 mA	t_{OP}	898	942	1638	1718	1882	1952	ps
		t_{DIP}	918	964	1704	1788	1958	2042	ps
	12 mA (1)	t_{OP}	891	936	1626	1706	1869	1938	ps
		t_{DIP}	911	958	1692	1776	1945	2028	ps
SSTL-18 Class II	8 mA	t_{OP}	883	925	1597	1675	1835	1904	ps
		t_{DIP}	903	947	1663	1745	1911	1994	ps
	16 mA	t_{OP}	894	937	1578	1655	1813	1882	ps
		t_{DIP}	914	959	1644	1725	1889	1972	ps
	18 mA	t_{OP}	890	933	1585	1663	1821	1890	ps
		t_{DIP}	910	955	1651	1733	1897	1980	ps
	20 mA (1)	t_{OP}	890	933	1583	1661	1819	1888	ps
		t_{DIP}	910	955	1649	1731	1895	1978	ps
1.8-V HSTL Class I	4 mA	t_{OP}	912	956	1608	1687	1848	1943	ps
		t_{DIP}	932	978	1674	1757	1924	2033	ps
	6 mA	t_{OP}	917	962	1595	1673	1833	1928	ps
		t_{DIP}	937	984	1661	1743	1909	2018	ps
	8 mA	t_{OP}	896	940	1586	1664	1823	1917	ps
		t_{DIP}	916	962	1652	1734	1899	2007	ps
	10 mA	t_{OP}	900	944	1591	1669	1828	1923	ps
		t_{DIP}	920	966	1657	1739	1904	2013	ps
	12 mA (1)	t_{OP}	892	936	1585	1663	1821	1916	ps
		t_{DIP}	912	958	1651	1733	1897	2006	ps

Table 5–75. Stratix II I/O Output Delay for Column Pins (Part 5 of 8)

I/O Standard	Drive Strength	Parameter	Minimum Timing		-3 Speed Grade (3)	-3 Speed Grade (4)	-4 Speed Grade	-5 Speed Grade	Unit
			Industrial	Commercial					
1.8-V HSTL Class II	16 mA	t_{OP}	877	919	1385	1453	1591	1680	ps
		t_{DIP}	897	941	1451	1523	1667	1770	ps
	18 mA	t_{OP}	879	921	1394	1462	1602	1691	ps
		t_{DIP}	899	943	1460	1532	1678	1781	ps
	20 mA (1)	t_{OP}	879	921	1402	1471	1611	1700	ps
		t_{DIP}	899	943	1468	1541	1687	1790	ps
1.5-V HSTL Class I	4 mA	t_{OP}	912	956	1607	1686	1847	1942	ps
		t_{DIP}	932	978	1673	1756	1923	2032	ps
	6 mA	t_{OP}	917	961	1588	1666	1825	1920	ps
		t_{DIP}	937	983	1654	1736	1901	2010	ps
	8 mA	t_{OP}	899	943	1590	1668	1827	1922	ps
		t_{DIP}	919	965	1656	1738	1903	2012	ps
	10 mA	t_{OP}	900	943	1592	1670	1829	1924	ps
		t_{DIP}	920	965	1658	1740	1905	2014	ps
	12 mA (1)	t_{OP}	893	937	1590	1668	1827	1922	ps
		t_{DIP}	913	959	1656	1738	1903	2012	ps
1.5-V HSTL Class II	16 mA	t_{OP}	881	924	1431	1501	1644	1734	ps
		t_{DIP}	901	946	1497	1571	1720	1824	ps
	18 mA	t_{OP}	884	927	1439	1510	1654	1744	ps
		t_{DIP}	904	949	1505	1580	1730	1834	ps
	20 mA (1)	t_{OP}	886	929	1450	1521	1666	1757	ps
		t_{DIP}	906	951	1516	1591	1742	1847	ps
1.2-V HSTL		t_{OP}	958	1004	1602	1681	-	-	ps
		t_{DIP}	978	1026	1668	1751	-	-	ps
PCI		t_{OP}	1028	1082	1956	2051	2244	2070	ps
		t_{DIP}	1048	1104	2022	2121	2320	2160	ps
PCI-X		t_{OP}	1028	1082	1956	2051	2244	2070	ps
		t_{DIP}	1048	1104	2022	2121	2320	2160	ps

Table 5–75. Stratix II I/O Output Delay for Column Pins (Part 6 of 8)

I/O Standard	Drive Strength	Parameter	Minimum Timing		-3 Speed Grade (3)	-3 Speed Grade (4)	-4 Speed Grade	-5 Speed Grade	Unit
			Industrial	Commercial					
Differential SSTL-2 Class I	8 mA	t_{OP}	913	957	1715	1799	1971	2041	ps
		t_{DIP}	933	979	1781	1869	2047	2131	ps
	12 mA	t_{OP}	896	940	1672	1754	1921	1991	ps
		t_{DIP}	916	962	1738	1824	1997	2081	ps
Differential SSTL-2 Class II	16 mA	t_{OP}	876	918	1609	1688	1849	1918	ps
		t_{DIP}	896	940	1675	1758	1925	2008	ps
	20 mA	t_{OP}	877	919	1598	1676	1836	1905	ps
		t_{DIP}	897	941	1664	1746	1912	1995	ps
	24 mA	t_{OP}	872	915	1596	1674	1834	1903	ps
		t_{DIP}	892	937	1662	1744	1910	1993	ps
Differential SSTL-18 Class I	4 mA	t_{OP}	909	953	1690	1773	1942	2012	ps
		t_{DIP}	929	975	1756	1843	2018	2102	ps
	6 mA	t_{OP}	914	958	1656	1737	1903	1973	ps
		t_{DIP}	934	980	1722	1807	1979	2063	ps
	8 mA	t_{OP}	894	937	1640	1721	1885	1954	ps
		t_{DIP}	914	959	1706	1791	1961	2044	ps
	10 mA	t_{OP}	898	942	1638	1718	1882	1952	ps
		t_{DIP}	918	964	1704	1788	1958	2042	ps
	12 mA	t_{OP}	891	936	1626	1706	1869	1938	ps
		t_{DIP}	911	958	1692	1776	1945	2028	ps
Differential SSTL-18 Class II	8 mA	t_{OP}	883	925	1597	1675	1835	1904	ps
		t_{DIP}	903	947	1663	1745	1911	1994	ps
	16 mA	t_{OP}	894	937	1578	1655	1813	1882	ps
		t_{DIP}	914	959	1644	1725	1889	1972	ps
	18 mA	t_{OP}	890	933	1585	1663	1821	1890	ps
		t_{DIP}	910	955	1651	1733	1897	1980	ps
	20 mA	t_{OP}	890	933	1583	1661	1819	1888	ps
		t_{DIP}	910	955	1649	1731	1895	1978	ps

Table 5–75. Stratix II I/O Output Delay for Column Pins (Part 7 of 8)

I/O Standard	Drive Strength	Parameter	Minimum Timing		-3 Speed Grade (3)	-3 Speed Grade (4)	-4 Speed Grade	-5 Speed Grade	Unit
			Industrial	Commercial					
1.8-V Differential HSTL Class I	4 mA	t_{OP}	912	956	1608	1687	1848	1943	ps
		t_{DIP}	932	978	1674	1757	1924	2033	ps
	6 mA	t_{OP}	917	962	1595	1673	1833	1928	ps
		t_{DIP}	937	984	1661	1743	1909	2018	ps
	8 mA	t_{OP}	896	940	1586	1664	1823	1917	ps
		t_{DIP}	916	962	1652	1734	1899	2007	ps
	10 mA	t_{OP}	900	944	1591	1669	1828	1923	ps
		t_{DIP}	920	966	1657	1739	1904	2013	ps
	12 mA	t_{OP}	892	936	1585	1663	1821	1916	ps
		t_{DIP}	912	958	1651	1733	1897	2006	ps
1.8-V Differential HSTL Class II	16 mA	t_{OP}	877	919	1385	1453	1591	1680	ps
		t_{DIP}	897	941	1451	1523	1667	1770	ps
	18 mA	t_{OP}	879	921	1394	1462	1602	1691	ps
		t_{DIP}	899	943	1460	1532	1678	1781	ps
	20 mA	t_{OP}	879	921	1402	1471	1611	1700	ps
		t_{DIP}	899	943	1468	1541	1687	1790	ps
1.5-V Differential HSTL Class I	4 mA	t_{OP}	912	956	1607	1686	1847	1942	ps
		t_{DIP}	932	978	1673	1756	1923	2032	ps
	6 mA	t_{OP}	917	961	1588	1666	1825	1920	ps
		t_{DIP}	937	983	1654	1736	1901	2010	ps
	8 mA	t_{OP}	899	943	1590	1668	1827	1922	ps
		t_{DIP}	919	965	1656	1738	1903	2012	ps
	10 mA	t_{OP}	900	943	1592	1670	1829	1924	ps
		t_{DIP}	920	965	1658	1740	1905	2014	ps
	12 mA	t_{OP}	893	937	1590	1668	1827	1922	
		t_{DIP}	913	959	1656	1738	1903	2012	

Table 5–75. Stratix II I/O Output Delay for Column Pins (Part 8 of 8)

I/O Standard	Drive Strength	Parameter	Minimum Timing		-3 Speed Grade (3)	-3 Speed Grade (4)	-4 Speed Grade	-5 Speed Grade	Unit
			Industrial	Commercial					
1.5-V Differential HSTL Class II	16 mA	t_{OP}	881	924	1431	1501	1644	1734	ps
		t_{DIP}	901	946	1497	1571	1720	1824	ps
	18 mA	t_{OP}	884	927	1439	1510	1654	1744	
		t_{DIP}	904	949	1505	1580	1730	1834	
	20 mA	t_{OP}	886	929	1450	1521	1666	1757	
		t_{DIP}	906	951	1516	1591	1742	1847	

Notes to Table 5–75:
(1) This is the default setting in the Quartus II software.
(2) These I/O standards are only supported on DQS pins.
(3) These numbers apply to -3 speed grade EP2S15, EP2S30, EP2S60, and EP2S90 devices.
(4) These numbers apply to -3 speed grade EP2S130 and EP2S180 devices.

Table 5–76. Stratix II I/O Output Delay for Row Pins (Part 1 of 3)

I/O Standard	Drive Strength	Parameter	Minimum Timing		-3 Speed Grade (2)	-3 Speed Grade (3)	-4 Speed Grade	-5 Speed Grade	Unit
			Industrial	Commercial					
LVTTL	4 mA	t_{OP}	1267	1328	2655	2786	3052	3189	ps
		t_{DIP}	1225	1285	2600	2729	2989	3116	ps
	8 mA	t_{OP}	1144	1200	2113	2217	2429	2549	ps
		t_{DIP}	1102	1157	2058	2160	2366	2476	ps
	12 mA (1)	t_{OP}	1091	1144	2081	2184	2392	2512	ps
		t_{DIP}	1049	1101	2026	2127	2329	2439	ps
LVCMOS	4 mA	t_{OP}	1144	1200	2113	2217	2429	2549	ps
		t_{DIP}	1102	1157	2058	2160	2366	2476	ps
	8 mA (1)	t_{OP}	1044	1094	1853	1944	2130	2243	ps
		t_{DIP}	1002	1051	1798	1887	2067	2170	ps

Table 5–76. Stratix II I/O Output Delay for Row Pins (Part 2 of 3)

I/O Standard	Drive Strength	Parameter	Minimum Timing		-3 Speed Grade (2)	-3 Speed Grade (3)	-4 Speed Grade	-5 Speed Grade	Unit
			Industrial	Commercial					
2.5 V	4 mA	t_{OP}	1128	1183	2091	2194	2403	2523	ps
		t_{DIP}	1086	1140	2036	2137	2340	2450	ps
	8 mA	t_{OP}	1030	1080	1872	1964	2152	2265	ps
		t_{DIP}	988	1037	1817	1907	2089	2192	ps
	12 mA (1)	t_{OP}	1012	1061	1775	1862	2040	2151	ps
		t_{DIP}	970	1018	1720	1805	1977	2078	ps
1.8 V	2 mA	t_{OP}	1196	1253	2954	3100	3396	3542	ps
		t_{DIP}	1154	1210	2899	3043	3333	3469	ps
	4 mA	t_{OP}	1184	1242	2294	2407	2637	2763	ps
		t_{DIP}	1142	1199	2239	2350	2574	2690	ps
	6 mA	t_{OP}	1079	1131	2039	2140	2344	2462	ps
		t_{DIP}	1037	1088	1984	2083	2281	2389	ps
	8 mA (1)	t_{OP}	1049	1100	1942	2038	2232	2348	ps
		t_{DIP}	1007	1057	1887	1981	2169	2275	ps
1.5 V	2 mA	t_{OP}	1158	1213	2530	2655	2908	3041	ps
		t_{DIP}	1116	1170	2475	2598	2845	2968	ps
	4 mA	t_{OP}	1055	1106	2020	2120	2322	2440	ps
		t_{DIP}	1013	1063	1965	2063	2259	2367	ps
SSTL-2 Class I	8 mA	t_{OP}	1002	1050	1759	1846	2022	2104	ps
		t_{DIP}	960	1007	1704	1789	1959	2031	ps
SSTL-2 Class II	16 mA (1)	t_{OP}	947	992	1581	1659	1817	1897	ps
		t_{DIP}	905	949	1526	1602	1754	1824	ps
SSTL-18 Class I	4 mA	t_{OP}	990	1038	1709	1793	1964	2046	ps
		t_{DIP}	948	995	1654	1736	1901	1973	ps
	6 mA	t_{OP}	994	1042	1648	1729	1894	1975	ps
		t_{DIP}	952	999	1593	1672	1831	1902	ps
	8 mA	t_{OP}	970	1018	1633	1713	1877	1958	ps
		t_{DIP}	928	975	1578	1656	1814	1885	ps
	10 mA (1)	t_{OP}	974	1021	1615	1694	1856	1937	ps
		t_{DIP}	932	978	1560	1637	1793	1864	ps

Table 5–76. Stratix II I/O Output Delay for Row Pins (Part 3 of 3)

I/O Standard	Drive Strength	Parameter	Minimum Timing		-3 Speed Grade (2)	-3 Speed Grade (3)	-4 Speed Grade	-5 Speed Grade	Unit
			Industrial	Commercial					
1.8-V HSTL Class I	4 mA	t_{OP}	972	1019	1610	1689	1850	1956	ps
		t_{DIP}	930	976	1555	1632	1787	1883	ps
	6 mA	t_{OP}	975	1022	1580	1658	1816	1920	ps
		t_{DIP}	933	979	1525	1601	1753	1847	ps
	8 mA	t_{OP}	958	1004	1576	1653	1811	1916	ps
		t_{DIP}	916	961	1521	1596	1748	1843	ps
	10 mA	t_{OP}	962	1008	1567	1644	1801	1905	ps
		t_{DIP}	920	965	1512	1587	1738	1832	ps
	12 mA (1)	t_{OP}	953	999	1566	1643	1800	1904	ps
		t_{DIP}	911	956	1511	1586	1737	1831	ps
1.5-V HSTL Class I	4 mA	t_{OP}	970	1018	1591	1669	1828	1933	ps
		t_{DIP}	928	975	1536	1612	1765	1860	ps
	6 mA	t_{OP}	974	1021	1579	1657	1815	1919	ps
		t_{DIP}	932	978	1524	1600	1752	1846	ps
	8 mA (1)	t_{OP}	960	1006	1572	1649	1807	1911	ps
		t_{DIP}	918	963	1517	1592	1744	1838	ps
LVDS		t_{OP}	1018	1067	1723	1808	1980	2089	ps
		t_{DIP}	976	1024	1668	1751	1917	2016	ps
HyperTransport		t_{OP}	1005	1053	1723	1808	1980	2089	ps
		t_{DIP}	963	1010	1668	1751	1917	2016	ps

Notes to Table 5–76:
(1) This is the default setting in the Quartus II software.
(2) These numbers apply to -3 speed grade EP2S15, EP2S30, EP2S60, and EP2S90 devices.
(3) These numbers apply to -3 speed grade EP2S130 and EP2S180 devices.

Maximum Input & Output Clock Toggle Rate

Maximum clock toggle rate is defined as the maximum frequency achievable for a clock type signal at an I/O pin. The I/O pin can be a regular I/O pin or a dedicated clock I/O pin.

The maximum clock toggle rate is different from the maximum data bit rate. If the maximum clock toggle rate on a regular I/O pin is 300 MHz, the maximum data bit rate for dual data rate (DDR) could be potentially as high as 600 Mbps on the same I/O pin.

Table 5–77 specifies the maximum input clock toggle rates. Table 5–78 specifies the maximum output clock toggle rates at 0pF load. Table 5–79 specifies the derating factors for the output clock toggle rate for a non 0pF load.

To calculate the output toggle rate for a non 0pF load, use this formula:

The toggle rate for a non 0pF load

= 1000 / (1000/ toggle rate at 0pF load + derating factor * load value in pF /1000)

For example, the output toggle rate at 0pF load for SSTL-18 Class II 20mA I/O standard is 550 MHz on a -3 device clock output pin. The derating factor is 94ps/pF. For a 10pF load the toggle rate is calculated as:

1000 / (1000/550 + 94 × 10 /1000) = 363 (MHz)

Tables 5–77 through 5–79 show the I/O toggle rates for Stratix II devices.

Table 5–77. Maximum Input Toggle Rate on Stratix II Devices (Part 1 of 2)

Input I/O Standard	Column I/O Pins (MHz)			Row I/O Pins (MHz)			Dedicated Clock Inputs (MHz)		
	-3	-4	-5	-3	-4	-5	-3	-4	-5
LVTTL	500	500	450	500	500	450	500	500	400
2.5-V LVTTL/CMOS	500	500	450	500	500	450	500	500	400
1.8-V LVTTL/CMOS	500	500	450	500	500	450	500	500	400
1.5-V LVTTL/CMOS	500	500	450	500	500	450	500	500	400
LVCMOS	500	500	450	500	500	450	500	500	400
SSTL-2 Class I	500	500	500	500	500	500	500	500	500
SSTL-2 Class II	500	500	500	500	500	500	500	500	500
SSTL-18 Class I	500	500	500	500	500	500	500	500	500
SSTL-18 Class II	500	500	500	500	500	500	500	500	500
1.5-V HSTL Class I	500	500	500	500	500	500	500	500	500
1.5-V HSTL Class II	500	500	500	500	500	500	500	500	500
1.8-V HSTL Class I	500	500	500	500	500	500	500	500	500

Table 5–77. Maximum Input Toggle Rate on Stratix II Devices (Part 2 of 2)

Input I/O Standard	Column I/O Pins (MHz)			Row I/O Pins (MHz)			Dedicated Clock Inputs (MHz)		
	-3	-4	-5	-3	-4	-5	-3	-4	-5
1.8-V HSTL Class II	500	500	500	500	500	500	500	500	500
PCI *(1)*	500	500	450	-	-	-	500	500	400
PCI-X *(1)*	500	500	450	-	-	-	500	500	400
1.2-V HSTL *(2)*	280	-	-	-	-	-	280	-	-
Differential SSTL-2 Class I *(1)*, *(3)*	500	500	500	-	-	-	500	500	500
Differential SSTL-2 Class II *(1)*, *(3)*	500	500	500	-	-	-	500	500	500
Differential SSTL-18 Class I *(1)*, *(3)*	500	500	500	-	-	-	500	500	500
Differential SSTL-18 Class II *(1)*, *(3)*	500	500	500	-	-	-	500	500	500
1.8-V Differential HSTL Class I *(1)*, *(3)*	500	500	500	-	-	-	500	500	500
1.8-V Differential HSTL Class II *(1)*, *(3)*	500	500	500	-	-	-	500	500	500
1.5-V Differential HSTL Class I *(1)*, *(3)*	500	500	500	-	-	-	500	500	500
1.5-V Differential HSTL Class II *(1)*, *(3)*	500	500	500	-	-	-	500	500	500
HyperTransport technology *(4)*	-	-	-	520	520	420	717	717	640
LVPECL *(1)*	-	-	-	-	-	-	450	450	400
LVDS *(5)*	-	-	-	520	520	420	717	717	640
LVDS *(6)*	-	-	-	-	-	-	450	450	400

Notes to Table 5–77:

(1) Row clock inputs don't support PCI, PCI-X, LVPECL, and differential HSTL and SSTL standards.
(2) 1.2-V HSTL is only supported on column I/O pins.
(3) Differential HSTL and SSTL standards are only supported on column clock and DQS inputs.
(4) HyperTransport technology is only supported on row I/O and row dedicated clock input pins.
(5) These numbers apply to I/O pins and dedicated clock pins in the left and right I/O banks.
(6) These numbers apply to dedicated clock pins in the top and bottom I/O banks.

Table 5–78. Maximum Output Toggle Rate on Stratix II Devices (Part 1 of 5) *Note (1)*

I/O Standard	Drive Strength	Column I/O Pins (MHz)			Row I/O Pins (MHz)			Clock Outputs (MHz)		
		-3	-4	-5	-3	-4	-5	-3	-4	-5
3.3-V LVTTL	4 mA	270	225	210	270	225	210	270	225	210
	8 mA	435	355	325	435	355	325	435	355	325
	12 mA	580	475	420	580	475	420	580	475	420
	16 mA	720	594	520	-	-	-	720	594	520
	20 mA	875	700	610	-	-	-	875	700	610
	24 mA	1,030	794	670	-	-	-	1,030	794	670
3.3-V LVCMOS	4 mA	290	250	230	290	250	230	290	250	230
	8 mA	565	480	440	565	480	440	565	480	440
	12 mA	790	710	670	-	-	-	790	710	670
	16 mA	1,020	925	875	-	-	-	1,020	925	875
	20 mA	1,066	985	935	-	-	-	1,066	985	935
	24 mA	1,100	1,040	1,000	-	-	-	1,100	1,040	1,000
2.5-V LVTTL/LVCMOS	4 mA	230	194	180	230	194	180	230	194	180
	8 mA	430	380	380	430	380	380	430	380	380
	12 mA	630	575	550	630	575	550	630	575	550
	16 mA	930	845	820	-	-	-	930	845	820
1.8-V LVTTL/LVCMOS	2 mA	120	109	104	120	109	104	120	109	104
	4 mA	285	250	230	285	250	230	285	250	230
	6 mA	450	390	360	450	390	360	450	390	360
	8 mA	660	570	520	660	570	520	660	570	520
	10 mA	905	805	755	-	-	-	905	805	755
	12 mA	1,131	1,040	990	-	-	-	1,131	1,040	990
1.5-V LVTTL/LVCMOS	2 mA	244	200	180	244	200	180	244	200	180
	4 mA	470	370	325	470	370	325	470	370	325
	6 mA	550	430	375	-	-	-	550	430	375
	8 mA	625	495	420	-	-	-	625	495	420
SSTL-2 Class I	8 mA	400	300	300	-	-	-	400	300	300
	12 mA	400	400	350	400	350	350	400	400	350
SSTL-2 Class II	16 mA	350	350	300	350	350	300	350	350	300
	20 mA	400	350	350	-	-	-	400	350	350
	24 mA	400	400	350	-	-	-	400	400	350

Table 5–78. Maximum Output Toggle Rate on Stratix II Devices (Part 2 of 5) *Note (1)*

I/O Standard	Drive Strength	Column I/O Pins (MHz)			Row I/O Pins (MHz)			Clock Outputs (MHz)		
		-3	-4	-5	-3	-4	-5	-3	-4	-5
SSTL-18 Class I	4 mA	200	150	150	200	150	150	200	150	150
	6 mA	350	250	200	350	250	200	350	250	200
	8 mA	450	300	300	450	300	300	450	300	300
	10 mA	500	400	400	500	400	400	500	400	400
	12 mA	700	550	400	-	-	-	650	550	400
SSTL-18 Class II	8 mA	200	200	150	-	-	-	200	200	150
	16 mA	400	350	350	-	-	-	400	350	350
	18 mA	450	400	400	-	-	-	450	400	400
	20 mA	550	500	450	-	-	-	550	500	450
1.8-V HSTL Class I	4 mA	300	300	300	300	300	300	300	300	300
	6 mA	500	450	450	500	450	450	500	450	450
	8 mA	650	600	600	650	600	600	650	600	600
	10 mA	700	650	600	700	650	600	700	650	600
	12 mA	700	700	650	700	700	650	700	700	650
1.8-V HSTL Class II	16 mA	500	500	450	-	-	-	500	500	450
	18 mA	550	500	500	-	-	-	550	500	500
	20 mA	650	550	550	-	-	-	550	550	550
1.5-V HSTL Class I	4 mA	350	300	300	350	300	300	350	300	300
	6 mA	500	500	450	500	500	450	500	500	450
	8 mA	700	650	600	700	650	600	700	650	600
	10 mA	700	700	650	-	-	-	700	700	650
	12 mA	700	700	700	-	-	-	700	700	700
1.5-V HSTL Class II	16 mA	600	600	550	-	-	-	600	600	550
	18 mA	650	600	600	-	-	-	650	600	600
	20 mA	700	650	600	-	-	-	700	650	600
Differential SSTL-2 Class I *(3)*	8 mA	400	300	300	400	300	300	400	300	300
	12 mA	400	400	350	400	400	350	400	400	350
Differential SSTL-2 Class II *(3)*	16 mA	350	350	300	350	350	300	350	350	300
	20 mA	400	350	350	350	350	297	400	350	350
	24 mA	400	400	350	-	-	-	400	400	350

Table 5–78. Maximum Output Toggle Rate on Stratix II Devices (Part 3 of 5) *Note (1)*

I/O Standard	Drive Strength	Column I/O Pins (MHz)			Row I/O Pins (MHz)			Clock Outputs (MHz)		
		-3	-4	-5	-3	-4	-5	-3	-4	-5
Differential SSTL-18 Class I *(3)*	4 mA	200	150	150	200	150	150	200	150	150
	6 mA	350	250	200	350	250	200	350	250	200
	8 mA	450	300	300	450	300	300	450	300	300
	10 mA	500	400	400	500	400	400	500	400	400
	12 mA	700	550	400	350	350	297	650	550	400
Differential SSTL-18 Class II *(3)*	8 mA	200	200	150	-	-	-	200	200	150
	16 mA	400	350	350	-	-	-	400	350	350
	18 mA	450	400	400	-	-	-	450	400	400
	20 mA	550	500	450	-	-	-	550	500	450
1.8-V Differential HSTL Class I *(3)*	4 mA	300	300	300	-	-	-	300	300	300
	6 mA	500	450	450	-	-	-	500	450	450
	8 mA	650	600	600	-	-	-	650	600	600
	10 mA	700	650	600	-	-	-	700	650	600
	12 mA	700	700	650	-	-	-	700	700	650
1.8-V Differential HSTL Class II *(3)*	16 mA	500	500	450	-	-	-	500	500	450
	18 mA	550	500	500	-	-	-	550	500	500
	20 mA	650	550	550	-	-	-	550	550	550
1.5-V Differential HSTL Class I *(3)*	4 mA	350	300	300	-	-	-	350	300	300
	6 mA	500	500	450	-	-	-	500	500	450
	8 mA	700	650	600	-	-	-	700	650	600
	10 mA	700	700	650	-	-	-	700	700	650
	12 mA	700	700	700	-	-	-	700	700	700
1.5-V Differential HSTL Class II *(3)*	16 mA	600	600	550	-	-	-	600	600	550
	18 mA	650	600	600	-	-	-	650	600	600
	20 mA	700	650	600	-	-	-	700	650	600
3.3-V PCI		1,000	790	670	-	-	-	1,000	790	670
3.3-V PCI-X		1,000	790	670	-	-	-	1,000	790	670
LVDS *(6)*		-	-	-	500	500	500	450	400	300
HyperTransport technology *(4)*, *(6)*					500	500	500	-	-	-
LVPECL *(5)*		-	-	-	-	-	-	450	400	300
3.3-V LVTTL	OCT 50 Ω	400	400	350	400	400	350	400	400	350
2.5-V LVTTL	OCT 50 Ω	350	350	300	350	350	300	350	350	300

Table 5–78. Maximum Output Toggle Rate on Stratix II Devices (Part 4 of 5) *Note (1)*

I/O Standard	Drive Strength	Column I/O Pins (MHz)			Row I/O Pins (MHz)			Clock Outputs (MHz)		
		-3	-4	-5	-3	-4	-5	-3	-4	-5
1.8-V LVTTL	OCT 50 Ω	700	550	450	700	550	450	700	550	450
3.3-V LVCMOS	OCT 50 Ω	350	350	300	350	350	300	350	350	300
1.5-V LVCMOS	OCT 50 Ω	550	450	400	550	450	400	550	450	400
SSTL-2 Class I	OCT 50 Ω	600	500	500	600	500	500	600	500	500
SSTL-2 Class II	OCT 25 Ω	600	550	500	600	550	500	600	550	500
SSTL-18 Class I	OCT 50 Ω	560	400	350	590	400	350	450	400	350
SSTL-18 Class II	OCT 25 Ω	550	500	450	-	-	-	550	500	450
1.2-V HSTL *(2)*	OCT 50 Ω	280	-	-	-	-	-	280	-	-
1.5-V HSTL Class I	OCT 50 Ω	600	550	500	600	550	500	600	550	500
1.8-V HSTL Class I	OCT 50 Ω	650	600	600	650	600	600	650	600	600
1.8-V HSTL Class II	OCT 25 Ω	500	500	450	-	-	-	500	500	450
Differential SSTL-2 Class I	OCT 50 Ω	600	500	500	600	500	500	600	500	500
Differential SSTL-2 Class II	OCT 25 Ω	600	550	500	600	550	500	600	550	500
Differential SSTL-18 Class I	OCT 50 Ω	560	400	350	590	400	350	560	400	350
Differential SSTL-18 Class II	OCT 25 Ω	550	500	450	-	-	-	550	500	450
1.8-V Differential HSTL Class I	OCT 50 Ω	650	600	600	650	600	600	650	600	600
1.8-V Differential HSTL Class II	OCT 25 Ω	500	500	450	-	-	-	500	500	450
1.5-V Differential HSTL Class I	OCT 50 Ω	600	550	500	600	550	500	600	550	500

Table 5–78. Maximum Output Toggle Rate on Stratix II Devices (Part 5 of 5) *Note (1)*

I/O Standard	Drive Strength	Column I/O Pins (MHz)			Row I/O Pins (MHz)			Clock Outputs (MHz)		
		-3	-4	-5	-3	-4	-5	-3	-4	-5
1.2-V Differential HSTL	OCT 50 Ω	280	-	-	-	-	-	280	-	-

Notes to Table 5–78:

(1) The toggle rate applies to 0-pF output load for all I/O standards except for LVDS and HyperTransport technology on row I/O pins. For LVDS and HyperTransport technology on row I/O pins, the toggle rates apply to load from 0 to 5pF.
(2) 1.2-V HSTL is only supported on column I/O pins in I/O banks 4, 7, and 8.
(3) Differential HSTL and SSTL is only supported on column clock and DQS outputs.
(4) HyperTransport technology is only supported on row I/O and row dedicated clock input pins.
(5) LVPECL is only supported on column clock pins.
(6) Refer to Tables 5–81 through 5–91 if using SERDES block. Use the toggle rate values from the clock output column for PLL output.

Table 5–79. Maximum Output Clock Toggle Rate Derating Factors (Part 1 of 5)

I/O Standard	Drive Strength	Maximum Output Clock Toggle Rate Derating Factors (ps/pF)								
		Column I/O Pins			Row I/O Pins			Dedicated Clock Outputs		
		-3	-4	-5	-3	-4	-5	-3	-4	-5
3.3-V LVTTL	4 mA	478	510	510	478	510	510	466	510	510
	8 mA	260	333	333	260	333	333	291	333	333
	12 mA	213	247	247	213	247	247	211	247	247
	16 mA	136	197	197	-	-	-	166	197	197
	20 mA	138	187	187	-	-	-	154	187	187
	24 mA	134	177	177	-	-	-	143	177	177
3.3-V LVCMOS	4 mA	377	391	391	377	391	391	377	391	391
	8 mA	206	212	212	206	212	212	178	212	212
	12 mA	141	145	145	-	-	-	115	145	145
	16 mA	108	111	111	-	-	-	86	111	111
	20 mA	83	88	88	-	-	-	79	88	88
	24 mA	65	72	72	-	-	-	74	72	72
2.5-V LVTTL/LVCMOS	4 mA	387	427	427	387	427	427	391	427	427
	8 mA	163	224	224	163	224	224	170	224	224
	12 mA	142	203	203	142	203	203	152	203	203
	16 mA	120	182	182	-	-	-	134	182	182

Table 5–79. Maximum Output Clock Toggle Rate Derating Factors (Part 2 of 5)

I/O Standard	Drive Strength	Maximum Output Clock Toggle Rate Derating Factors (ps/pF)								
		Column I/O Pins			Row I/O Pins			Dedicated Clock Outputs		
		-3	-4	-5	-3	-4	-5	-3	-4	-5
1.8-V LVTTL/LVCMOS	2 mA	951	1421	1421	951	1421	1421	904	1421	1421
	4 mA	405	516	516	405	516	516	393	516	516
	6 mA	261	325	325	261	325	325	253	325	325
	8 mA	223	274	274	223	274	274	224	274	274
	10 mA	194	236	236	-	-	-	199	236	236
	12 mA	174	209	209	-	-	-	180	209	209
1.5-V LVTTL/LVCMOS	2 mA	652	963	963	652	963	963	618	963	963
	4 mA	333	347	347	333	347	347	270	347	347
	6 mA	182	247	247	-	-	-	198	247	247
	8 mA	135	194	194	-	-	-	155	194	194
SSTL-2 Class I	8 mA	364	680	680	364	680	680	350	680	680
	12 mA	163	207	207	163	207	207	188	207	207
SSTL-2 Class II	16 mA	118	147	147	118	147	147	94	147	147
	20 mA	99	122	122	-	-	-	87	122	122
	24 mA	91	116	116	-	-	-	85	116	116
SSTL-18 Class I	4 mA	458	570	570	458	570	570	505	570	570
	6 mA	305	380	380	305	380	380	336	380	380
	8 mA	225	282	282	225	282	282	248	282	282
	10 mA	167	220	220	167	220	220	190	220	220
	12 mA	129	175	175	-	-	-	148	175	175
SSTL-18 Class II	8 mA	173	206	206	-	-	-	155	206	206
	16 mA	150	160	160	-	-	-	140	160	160
	18 mA	120	130	130	-	-	-	110	130	130
	20 mA	109	127	127	-	-	-	94	127	127
SSTL-2 Class I	8 mA	364	680	680	364	680	680	350	680	680
	12 mA	163	207	207	163	207	207	188	207	207
SSTL-2 Class II	16 mA	118	147	147	118	147	147	94	147	147
	20 mA	99	122	122	-	-	-	87	122	122
	24 mA	91	116	116	-	-	-	85	116	116

Table 5–79. Maximum Output Clock Toggle Rate Derating Factors (Part 3 of 5)

I/O Standard	Drive Strength	Maximum Output Clock Toggle Rate Derating Factors (ps/pF)								
		Column I/O Pins			Row I/O Pins			Dedicated Clock Outputs		
		-3	-4	-5	-3	-4	-5	-3	-4	-5
SSTL-18 Class I	4 mA	458	570	570	458	570	570	505	570	570
	6 mA	305	380	380	305	380	380	336	380	380
	8 mA	225	282	282	225	282	282	248	282	282
	10 mA	167	220	220	167	220	220	190	220	220
	12 mA	129	175	175	-	-	-	148	175	175
SSTL-18 Class II	8 mA	173	206	206	-	-	-	155	206	206
	16 mA	150	160	160	-	-	-	140	160	160
	18 mA	120	130	130	-	-	-	110	130	130
	20 mA	109	127	127	-	-	-	94	127	127
1.8-V HSTL Class I	4 mA	245	282	282	245	282	282	229	282	282
	6 mA	164	188	188	164	188	188	153	188	188
	8 mA	123	140	140	123	140	140	114	140	140
	10 mA	110	124	124	110	124	124	108	124	124
	12 mA	97	110	110	97	110	110	104	110	110
1.8-V HSTL Class II	16 mA	101	104	104	-	-	-	99	104	104
	18 mA	98	102	102	-	-	-	93	102	102
	20 mA	93	99	99	-	-	-	88	99	99
1.5-V HSTL Class I	4 mA	168	196	196	168	196	196	188	196	196
	6 mA	112	131	131	112	131	131	125	131	131
	8 mA	84	99	99	84	99	99	95	99	99
	10 mA	87	98	98	-	-	-	90	98	98
	12 mA	86	98	98	-	-	-	87	98	98
1.5-V HSTL Class II	16 mA	95	101	101	-	-	-	96	101	101
	18 mA	95	100	100	-	-	-	101	100	100
	20 mA	94	101	101	-	-	-	104	101	101
Differential SSTL-2 Class II *(3)*	8 mA	364	680	680	-	-	-	350	680	680
	12 mA	163	207	207	-	-	-	188	207	207
	16 mA	118	147	147	-	-	-	94	147	147
	20 mA	99	122	122	-	-	-	87	122	122
	24 mA	91	116	116	-	-	-	85	116	116

Table 5–79. Maximum Output Clock Toggle Rate Derating Factors (Part 4 of 5)

I/O Standard	Drive Strength	Maximum Output Clock Toggle Rate Derating Factors (ps/pF)								
		Column I/O Pins			Row I/O Pins			Dedicated Clock Outputs		
		-3	-4	-5	-3	-4	-5	-3	-4	-5
Differential SSTL-18 Class I *(3)*	4 mA	458	570	570	-	-	-	505	570	570
	6 mA	305	380	380	-	-	-	336	380	380
	8 mA	225	282	282	-	-	-	248	282	282
	10 mA	167	220	220	-	-	-	190	220	220
	12 mA	129	175	175	-	-	-	148	175	175
Differential SSTL-18 Class II *(3)*	8 mA	173	206	206	-	-	-	155	206	206
	16 mA	150	160	160	-	-	-	140	160	160
	18 mA	120	130	130	-	-	-	110	130	130
	20 mA	109	127	127	-	-	-	94	127	127
1.8-V Differential HSTL Class I *(3)*	4 mA	245	282	282	-	-	-	229	282	282
	6 mA	164	188	188	-	-	-	153	188	188
	8 mA	123	140	140	-	-	-	114	140	140
	10 mA	110	124	124	-	-	-	108	124	124
	12 mA	97	110	110	-	-	-	104	110	110
1.8-V Differential HSTL Class II *(3)*	16 mA	101	104	104	-	-	-	99	104	104
	18 mA	98	102	102	-	-	-	93	102	102
	20 mA	93	99	99	-	-	-	88	99	99
1.5-V Differential HSTL Class I *(3)*	4 mA	168	196	196	-	-	-	188	196	196
	6 mA	112	131	131	-	-	-	125	131	131
	8 mA	84	99	99	-	-	-	95	99	99
	10 mA	87	98	98	-	-	-	90	98	98
	12 mA	86	98	98	-	-	-	87	98	98
1.5-V Differential HSTL Class II *(3)*	16 mA	95	101	101	-	-	-	96	101	101
	18 mA	95	100	100	-	-	-	101	100	100
	20 mA	94	101	101	-	-	-	104	101	101
3.3-V PCI		134	177	177	-	-	-	143	177	177
3.3-V PCI-X		134	177	177	-	-	-	143	177	177
LVDS		-	-	-	155 *(1)*	155 *(1)*	155 *(1)*	134	134	134
HyperTransport technology		-	-	-	155 *(1)*	155 *(1)*	155 *(1)*	-	-	-
LVPECL *(4)*		-	-	-	-	-	-	134	134	134

Table 5–79. Maximum Output Clock Toggle Rate Derating Factors (Part 5 of 5)

I/O Standard	Drive Strength	Maximum Output Clock Toggle Rate Derating Factors (ps/pF)								
		Column I/O Pins			Row I/O Pins			Dedicated Clock Outputs		
		-3	-4	-5	-3	-4	-5	-3	-4	-5
3.3-V LVTTL	OCT 50 Ω	133	152	152	133	152	152	147	152	152
2.5-V LVTTL	OCT 50 Ω	207	274	274	207	274	274	235	274	274
1.8-V LVTTL	OCT 50 Ω	151	165	165	151	165	165	153	165	165
3.3-V LVCMOS	OCT 50 Ω	300	316	316	300	316	316	263	316	316
1.5-V LVCMOS	OCT 50 Ω	157	171	171	157	171	171	174	171	171
SSTL-2 Class I	OCT 50 Ω	121	134	134	121	134	134	77	134	134
SSTL-2 Class II	OCT 25 Ω	56	101	101	56	101	101	58	101	101
SSTL-18 Class I	OCT 50 Ω	100	123	123	100	123	123	106	123	123
SSTL-18 Class II	OCT 25 Ω	61	110	110	-	-	-	59	110	110
1.2-V HSTL *(2)*	OCT 50 Ω	95	-	-	-	-	-	-	-	95

Notes to Table 5–79:

(1) For LVDS and HyperTransport technology output on row I/O pins, the toggle rate derating factors apply to loads larger than 5 pF. In the derating calculation, subtract 5 pF from the intended load value in pF for the correct result. For a load less than or equal to 5 pF, refer to Table 5–78 for output toggle rates.
(2) 1.2-V HSTL is only supported on column I/O pins in I/O banks 4,7, and 8.
(3) Differential HSTL and SSTL is only supported on column clock and DQS outputs.
(4) LVPECL is only supported on column clock outputs.

Duty Cycle Distortion

Duty cycle distortion (DCD) describes how much the falling edge of a clock is off from its ideal position. The ideal position is when both the clock high time (CLKH) and the clock low time (CLKL) equal half of the clock period (T), as shown in Figure 5–7. DCD is the deviation of the non-ideal falling edge from the ideal falling edge, such as D1 for the falling edge A and D2 for the falling edge B (Figure 5–7). The maximum DCD for a clock is the larger value of D1 and D2.

Figure 5–7. Duty Cycle Distortion

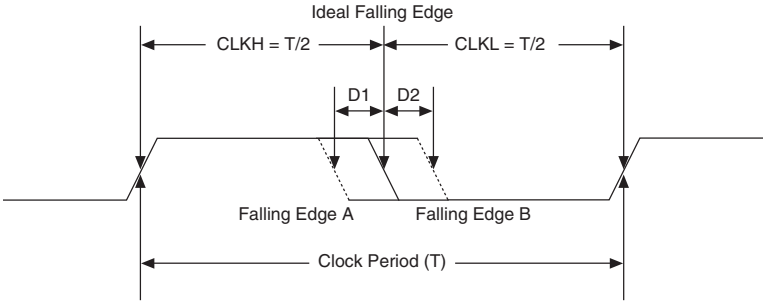

DCD expressed in absolution derivation, for example, D1 or D2 in Figure 5–7, is clock-period independent. DCD can also be expressed as a percentage, and the percentage number is clock-period dependent. DCD as a percentage is defined as

(T/2 – D1) / T (the low percentage boundary)

(T/2 + D2) / T (the high percentage boundary)

DCD Measurement Techniques

DCD is measured at an FPGA output pin driven by registers inside the corresponding I/O element (IOE) block. When the output is a single data rate signal (non-DDIO), only one edge of the register input clock (positive or negative) triggers output transitions (Figure 5–8). Therefore, any DCD present on the input clock signal or caused by the clock input buffer or different input I/O standard does not transfer to the output signal.

Figure 5–8. DCD Measurement Technique for Non-DDIO (Single-Data Rate) Outputs

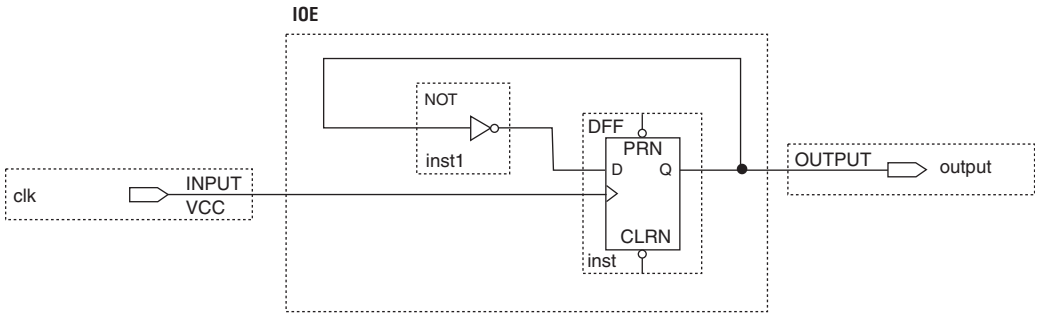

However, when the output is a double data rate input/output (DDIO) signal, both edges of the input clock signal (positive and negative) trigger output transitions (Figure 5–9). Therefore, any distortion on the input clock and the input clock buffer affect the output DCD.

Figure 5–9. DCD Measurement Technique for DDIO (Double-Data Rate) Outputs

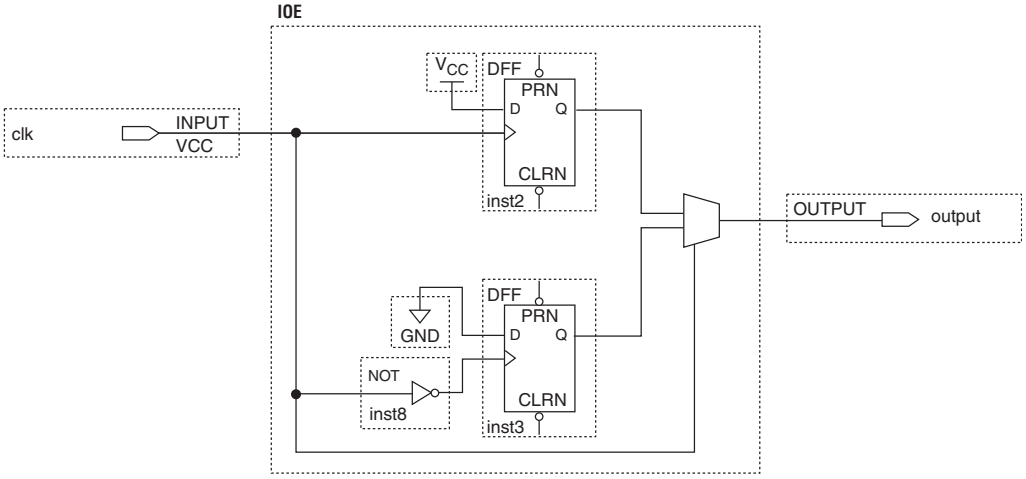

When an FPGA PLL generates the internal clock, the PLL output clocks the IOE block. As the PLL only monitors the positive edge of the reference clock input and internally re-creates the output clock signal, any DCD present on the reference clock is filtered out. Therefore, the DCD for a DDIO output with PLL in the clock path is better than the DCD for a DDIO output without PLL in the clock path.

Tables 5–80 through 5–87 give the maximum DCD in absolution derivation for different I/O standards on Stratix II devices. Examples are also provided that show how to calculate DCD as a percentage.

Table 5–80. Maximum DCD for Non-DDIO Output on Row I/O Pins (Part 1 of 2) *Note (1)*

Row I/O Output Standard	Maximum DCD for Non-DDIO Output		
	-3 Devices	-4 & -5 Devices	Unit
3.3-V LVTTTL	245	275	ps
3.3-V LVCMOS	125	155	ps
2.5 V	105	135	ps

Table 5–80. Maximum DCD for Non-DDIO Output on Row I/O Pins (Part 2 of 2) *Note (1)*

Row I/O Output Standard	Maximum DCD for Non-DDIO Output		
	-3 Devices	-4 & -5 Devices	Unit
1.8 V	180	180	ps
1.5-V LVCMOS	165	195	ps
SSTL-2 Class I	115	145	ps
SSTL-2 Class II	95	125	ps
SSTL-18 Class I	55	85	ps
1.8-V HSTL Class I	80	100	ps
1.5-V HSTL Class I	85	115	ps
LVDS/ HyperTransport technology	55	80	ps

Note to Table 5–80:
(1) The DCD specification is based on a no logic array noise condition.

Here is an example for calculating the DCD as a percentage for a non-DDIO output on a row I/O on a -3 device:

If the non-DDIO output I/O standard is SSTL-2 Class II, the maximum DCD is 95 ps (see Table 5–80). If the clock frequency is 267 MHz, the clock period T is:

T = 1/ f = 1 / 267 MHz = 3.745 ns = 3745 ps

To calculate the DCD as a percentage:

(T/2 – DCD) / T = (3745ps/2 – 95ps) / 3745ps = 47.5% (for low boundary)

(T/2 + DCD) / T = (3745ps/2 + 95ps) / 3745ps = 52.5% (for high boundary)

Therefore, the DCD percentage for the 267 MHz SSTL-2 Class II non-DDIO row output clock on a –3 device ranges from 47.5% to 52.5%.

Table 5–81. Maximum DCD for Non-DDIO Output on Column I/O Pins *Note (1)*

Column I/O Output Standard I/O Standard	Maximum DCD for Non-DDIO Output		Unit
	-3 Devices	-4 & -5 Devices	
3.3-V LVTTL	190	220	ps
3.3-V LVCMOS	140	175	ps
2.5 V	125	155	ps
1.8 V	80	110	ps
1.5-V LVCMOS	185	215	ps
SSTL-2 Class I	105	135	ps
SSTL-2 Class II	100	130	ps
SSTL-18 Class I	90	115	ps
SSTL-18 Class II	70	100	ps
1.8-V HSTL Class I	80	110	ps
1.8-V HSTL Class II	80	110	ps
1.5-V HSTL Class I	85	115	ps
1.5-V HSTL Class II	50	80	ps
1.2-V HSTL *(2)*	170	-	ps
LVPECL	55	80	ps

Notes to Table 5–81:
(1) The DCD specification is based on a no logic array noise condition.
(2) 1.2-V HSTL is only supported in -3 devices.

Table 5–82. Maximum DCD for DDIO Output on Row I/O Pins Without PLL in the Clock Path for -3 Devices *Notes (1), (2)*

Row DDIO Output I/O Standard	Maximum DCD Based on I/O Standard of Input Feeding the DDIO Clock Port (No PLL in Clock Path)					Unit
	TTL/CMOS		SSTL-2	SSTL/HSTL	LVDS/ HyperTransport Technology	
	3.3 & 2.5 V	1.8 & 1.5 V	2.5 V	1.8 & 1.5 V	3.3 V	
3.3-V LVTTL	260	380	145	145	110	ps
3.3-V LVCMOS	210	330	100	100	65	ps
2.5 V	195	315	85	85	75	ps
1.8 V	150	265	85	85	120	ps
1.5-V LVCMOS	255	370	140	140	105	ps
SSTL-2 Class I	175	295	65	65	70	ps
SSTL-2 Class II	170	290	60	60	75	ps
SSTL-18 Class I	155	275	55	50	90	ps
1.8-V HSTL Class I	150	270	60	60	95	ps
1.5-V HSTL Class I	150	270	55	55	90	ps
LVDS/ HyperTransport technology	180	180	180	180	180	ps

Notes to Table 5–82:
(1) The information in Table 5–82 assumes the input clock has zero DCD.
(2) The DCD specification is based on a no logic array noise condition.

Here is an example for calculating the DCD in percentage for a DDIO output on a row I/O on a -3 device:

If the input I/O standard is SSTL-2 and the DDIO output I/O standard is SSTL-2 Class II, the maximum DCD is 60 ps (see Table 5–82). If the clock frequency is 267 MHz, the clock period T is:

$$T = 1/f = 1 / 267\ \text{MHz} = 3.745\ \text{ns} = 3745\ \text{ps}$$

Calculate the DCD as a percentage:

$(T/2 - DCD) / T = (3745\text{ps}/2 - 60\text{ps}) / 3745\text{ps} = 48.4\%$ (for low boundary)

$(T/2 + DCD) / T = (3745\ \text{ps}/2 + 60\ \text{ps}) / 3745\text{ps} = 51.6\%$ (for high boundary)

Therefore, the DCD percentage for the 267 MHz SSTL-2 Class II DDIO row output clock on a –3 device ranges from 48.4% to 51.6%.

Table 5–83. Maximum DCD for DDIO Output on Row I/O Pins Without PLL in the Clock Path for -4 & -5 Devices *Notes (1), (2)*

Row DDIO Output I/O Standard	Maximum DCD Based on I/O Standard of Input Feeding the DDIO Clock Port (No PLL in the Clock Path)					Unit
	TTL/CMOS		SSTL-2	SSTL/HSTL	LVDS/ HyperTransport Technology	
	3.3/2.5 V	1.8/1.5 V	2.5 V	1.8/1.5 V	3.3 V	
3.3-V LVTTL	440	495	170	160	105	ps
3.3-V LVCMOS	390	450	120	110	75	ps
2.5 V	375	430	105	95	90	ps
1.8 V	325	385	90	100	135	ps
1.5-V LVCMOS	430	490	160	155	100	ps
SSTL-2 Class I	355	410	85	75	85	ps
SSTL-2 Class II	350	405	80	70	90	ps
SSTL-18 Class I	335	390	65	65	105	ps
1.8-V HSTL Class I	330	385	60	70	110	ps
1.5-V HSTL Class I	330	390	60	70	105	ps
LVDS/ HyperTransport technology	180	180	180	180	180	ps

Notes to Table 5–83:
(1) Table 5–83 assumes the input clock has zero DCD.
(2) The DCD specification is based on a no logic array noise condition.

Table 5–84. Maximum DCD for DDIO Output on Column I/O Pins Without PLL in the Clock Path for -3 Devices (Part 1 of 2) *Notes (1), (2)*

DDIO Column Output I/O Standard	Maximum DCD Based on I/O Standard of Input Feeding the DDIO Clock Port (No PLL in the Clock Path)					Unit
	TTL/CMOS		SSTL-2	SSTL/HSTL	1.2-V HSTL	
	3.3/2.5 V	1.8/1.5 V	2.5 V	1.8/1.5 V	1.2 V	
3.3-V LVTTL	260	380	145	145	145	ps
3.3-V LVCMOS	210	330	100	100	100	ps
2.5 V	195	315	85	85	85	ps

Table 5–84. Maximum DCD for DDIO Output on Column I/O Pins Without PLL in the Clock Path for -3 Devices (Part 2 of 2) *Notes (1), (2)*

DDIO Column Output I/O Standard	Maximum DCD Based on I/O Standard of Input Feeding the DDIO Clock Port (No PLL in the Clock Path)					Unit
	TTL/CMOS		SSTL-2	SSTL/HSTL	1.2-V HSTL	
	3.3/2.5 V	1.8/1.5 V	2.5 V	1.8/1.5 V	1.2 V	
1.8 V	150	265	85	85	85	ps
1.5-V LVCMOS	255	370	140	140	140	ps
SSTL-2 Class I	175	295	65	65	65	ps
SSTL-2 Class II	170	290	60	60	60	ps
SSTL-18 Class I	155	275	55	50	50	ps
SSTL-18 Class II	140	260	70	70	70	ps
1.8-V HSTL Class I	150	270	60	60	60	ps
1.8-V HSTL Class II	150	270	60	60	60	ps
1.5-V HSTL Class I	150	270	55	55	55	ps
1.5-V HSTL Class II	125	240	85	85	85	ps
1.2-V HSTL	240	360	155	155	155	ps
LVPECL	180	180	180	180	180	ps

Notes to Table 5–84:
(1) Table 5–84 assumes the input clock has zero DCD.
(2) The DCD specification is based on a no logic array noise condition.

Table 5–85. Maximum DCD for DDIO Output on Column I/O Pins Without PLL in the Clock Path for -4 & -5 Devices (Part 1 of 2) *Notes (1), (2)*

DDIO Column Output I/O Standard	Maximum DCD Based on I/O Standard of Input Feeding the DDIO Clock Port (No PLL in the Clock Path)				Unit
	TTL/CMOS		SSTL-2	SSTL/HSTL	
	3.3/2.5 V	1.8/1.5 V	2.5 V	1.8/1.5 V	
3.3-V LVTTL	440	495	170	160	ps
3.3-V LVCMOS	390	450	120	110	ps
2.5 V	375	430	105	95	ps
1.8 V	325	385	90	100	ps
1.5-V LVCMOS	430	490	160	155	ps
SSTL-2 Class I	355	410	85	75	ps
SSTL-2 Class II	350	405	80	70	ps

Table 5–85. Maximum DCD for DDIO Output on Column I/O Pins Without PLL in the Clock Path for -4 & -5 Devices (Part 2 of 2) *Notes (1), (2)*

DDIO Column Output I/O Standard	Maximum DCD Based on I/O Standard of Input Feeding the DDIO Clock Port (No PLL in the Clock Path)				Unit
	TTL/CMOS		SSTL-2	SSTL/HSTL	
	3.3/2.5 V	1.8/1.5 V	2.5 V	1.8/1.5 V	
SSTL-18 Class I	335	390	65	65	ps
SSTL-18 Class II	320	375	70	80	ps
1.8-V HSTL Class I	330	385	60	70	ps
1.8-V HSTL Class II	330	385	60	70	ps
1.5-V HSTL Class I	330	390	60	70	ps
1.5-V HSTL Class II	330	360	90	100	ps
1.2-V HSTL	420	470	155	165	ps
LVPECL	180	180	180	180	ps

Notes to Table 5–85:
(1) Table 5–85 assumes the input clock has zero DCD.
(2) The DCD specification is based on a no logic array noise condition.

Table 5–86. Maximum DCD for DDIO Output on Row I/O Pins with PLL in the Clock Path (Part 1 of 2) *Note (1)*

Row DDIO Output I/O Standard	Maximum DCD (PLL Output Clock Feeding DDIO Clock Port)		Unit
	-3 Device	-4 & -5 Device	
3.3-V LVTTL	110	105	ps
3.3-V LVCMOS	65	75	ps
2.5V	75	90	ps
1.8V	85	100	ps
1.5-V LVCMOS	105	100	ps
SSTL-2 Class I	65	75	ps
SSTL-2 Class II	60	70	ps
SSTL-18 Class I	50	65	ps
1.8-V HSTL Class I	50	70	ps
1.5-V HSTL Class I	55	70	ps

Table 5–86. Maximum DCD for DDIO Output on Row I/O Pins with PLL in the Clock Path (Part 2 of 2) *Note (1)*

Row DDIO Output I/O Standard	Maximum DCD (PLL Output Clock Feeding DDIO Clock Port)		Unit
	-3 Device	-4 & -5 Device	
LVDS/ HyperTransport technology	180	180	ps

Note to Table 5–86:
(1) The DCD specification is based on a no logic array noise condition.

Table 5–87. Maximum DCD for DDIO Output on Column I/O with PLL in the Clock Path *Note (1)*

Column DDIO Output I/O Standard	Maximum DCD (PLL Output Clock Feeding DDIO Clock Port)		Unit
	-3 Device	-4 & -5 Device	
3.3-V LVTTL	145	160	ps
3.3-V LVCMOS	100	110	ps
2.5V	85	95	ps
1.8V	85	100	ps
1.5-V LVCMOS	140	155	ps
SSTL-2 Class I	65	75	ps
SSTL-2 Class II	60	70	ps
SSTL-18 Class I	50	65	ps
SSTL-18 Class II	70	80	ps
1.8-V HSTL Class I	60	70	ps
1.8-V HSTL Class II	60	70	ps
1.5-V HSTL Class I	55	70	ps
1.5-V HSTL Class II	85	100	ps
1.2-V HSTL	155	-	ps
LVPECL	180	180	ps

Notes to Table 5–87:
(1) The DCD specification is based on a no logic array noise condition.
(2) 1.2-V HSTL is only supported in -3 devices.

High-Speed I/O Specifications

Table 5–88 provides high-speed timing specifications definitions.

Table 5–88. High-Speed Timing Specifications & Definitions

High-Speed Timing Specifications	Definitions
t_C	High-speed receiver/transmitter input and output clock period.
f_{HSCLK}	High-speed receiver/transmitter input and output clock frequency.
J	Deserialization factor (width of parallel data bus).
W	PLL multiplication factor.
t_{RISE}	Low-to-high transmission time.
t_{FALL}	High-to-low transmission time.
Timing unit interval (TUI)	The timing budget allowed for skew, propagation delays, and data sampling window. (TUI = 1/(Receiver Input Clock Frequency × Multiplication Factor) = t_C/w).
f_{HSDR}	Maximum/minimum LVDS data transfer rate (f_{HSDR} = 1/TUI), non-DPA.
$f_{HSDRDPA}$	Maximum/minimum LVDS data transfer rate ($f_{HSDRDPA}$ = 1/TUI), DPA.
Channel-to-channel skew (TCCS)	The timing difference between the fastest and slowest output edges, including t_{CO} variation and clock skew. The clock is included in the TCCS measurement.
Sampling window (SW)	The period of time during which the data must be valid in order to capture it correctly. The setup and hold times determine the ideal strobe position within the sampling window.
Input jitter	Peak-to-peak input jitter on high-speed PLLs.
Output jitter	Peak-to-peak output jitter on high-speed PLLs.
t_{DUTY}	Duty cycle on high-speed transmitter output clock.
t_{LOCK}	Lock time for high-speed transmitter and receiver PLLs.

Table 5–89 shows the high-speed I/O timing specifications for -3 speed grade Stratix II devices.

Table 5–89. High-Speed I/O Specifications for -3 Speed Grade (Part 1 of 2) *Notes (1), (2)*

Symbol	Conditions	-3 Speed Grade			Unit
		Min	Typ	Max	
f_{HSCLK} (clock frequency) $f_{HSCLK} = f_{HSDR} / W$	W = 2 to 32 (LVDS, HyperTransport technology) *(3)*	16		520	MHz
	W = 1 (SERDES bypass, LVDS only)	16		500	MHz
	W = 1 (SERDES used, LVDS only)	150		717	MHz

Table 5–89. High-Speed I/O Specifications for -3 Speed Grade (Part 2 of 2) *Notes (1), (2)*

Symbol	Conditions			-3 Speed Grade			Unit
				Min	Typ	Max	
f_{HSDR} (data rate)	J = 4 to 10 (LVDS, HyperTransport technology)			150		1,040	Mbps
	J = 2 (LVDS, HyperTransport technology)			*(4)*		760	Mbps
	J = 1 (LVDS only)			*(4)*		500	Mbps
$f_{HSDRDPA}$ (DPA data rate)	J = 4 to 10 (LVDS, HyperTransport technology)			150		1,040	Mbps
TCCS	All differential standards			-		200	ps
SW	All differential standards			330		-	ps
Output jitter						190	ps
Output t_{RISE}	All differential I/O standards					160	ps
Output t_{FALL}	All differential I/O standards					180	ps
t_{DUTY}				45	50	55	%
DPA run length						6,400	UI
DPA jitter tolerance	Data channel peak-to-peak jitter			0.44			UI
DPA lock time	**Standard**	**Training Pattern**	**Transition Density**				Number of repetitions
	SPI-4	0000000000 1111111111	10%	256			
	Parallel Rapid I/O	00001111	25%	256			
		10010000	50%	256			
	Miscellaneous	10101010	100%	256			
		01010101		256			

Notes to Table 5–89:

(1) When J = 4 to 10, the SERDES block is used.

(2) When J = 1 or 2, the SERDES block is bypassed.

(3) The input clock frequency and the W factor must satisfy the following fast PLL VCO specification: 150 ≤ input clock frequency × W ≤ 1,040.

(4) The minimum specification is dependent on the clock source (fast PLL, enhanced PLL, clock pin, and so on) and the clock routing resource (global, regional, or local) utilized. The I/O differential buffer and input register do not have a minimum toggle rate.

Table 5–90 shows the high-speed I/O timing specifications for -4 speed grade Stratix II devices.

Table 5–90. High-Speed I/O Specifications for -4 Speed Grade *Notes (1), (2)*

Symbol	Conditions	-4 Speed Grade			Unit
		Min	Typ	Max	
f_{HSCLK} (clock frequency) $f_{HSCLK} = f_{HSDR} / W$	W = 2 to 32 (LVDS, HyperTransport technology) *(3)*	16		520	MHz
	W = 1 (SERDES bypass, LVDS only)	16		500	MHz
	W = 1 (SERDES used, LVDS only)	150		717	MHz
f_{HSDR} (data rate)	J = 4 to 10 (LVDS, HyperTransport technology)	150		1,040	Mbps
	J = 2 (LVDS, HyperTransport technology)	*(4)*		760	Mbps
	J = 1 (LVDS only)	*(4)*		500	Mbps
$f_{HSDRDPA}$ (DPA data rate)	J = 4 to 10 (LVDS, HyperTransport technology)	150		1,040	Mbps
TCCS	All differential standards	-		200	ps
SW	All differential standards	330		-	ps
Output jitter				190	ps
Output t_{RISE}	All differential I/O standards			160	ps
Output t_{FALL}	All differential I/O standards			180	ps
t_{DUTY}		45	50	55	%
DPA run length				6,400	UI
DPA jitter tolerance	Data channel peak-to-peak jitter	0.44			UI
DPA lock time	**Standard** / **Training Pattern** / **Transition Density**				Number of repetitions
	SPI-4 / 0000000000 1111111111 / 10%	256			
	Parallel Rapid I/O / 00001111 / 25%	256			
	Parallel Rapid I/O / 10010000 / 50%	256			
	Miscellaneous / 10101010 / 100%	256			
	Miscellaneous / 01010101 /	256			

Notes to Table 5–90:

(1) When J = 4 to 10, the SERDES block is used.

(2) When J = 1 or 2, the SERDES block is bypassed.

(3) The input clock frequency and the W factor must satisfy the following fast PLL VCO specification: 150 ≤ input clock frequency × W ≤ 1,040.

(4) The minimum specification is dependent on the clock source (fast PLL, enhanced PLL, clock pin, and so on) and the clock routing resource (global, regional, or local) utilized. The I/O differential buffer and input register do not have a minimum toggle rate.

Table 5–91 shows the high-speed I/O timing specifications for -5 speed grade Stratix II devices.

Table 5–91. High-Speed I/O Specifications for -5 Speed Grade *Notes (1), (2)*

Symbol	Conditions			-5 Speed Grade			Unit
				Min	Typ	Max	
f_{HSCLK} (clock frequency) $f_{HSCLK} = f_{HSDR} / W$	W = 2 to 32 (LVDS, HyperTransport technology) *(3)*			16		420	MHz
	W = 1 (SERDES bypass, LVDS only)			16		500	MHz
	W = 1 (SERDES used, LVDS only)			150		640	MHz
f_{HSDR} (data rate)	J = 4 to 10 (LVDS, HyperTransport technology)			150		840	Mbps
	J = 2 (LVDS, HyperTransport technology)			*(4)*		700	Mbps
	J = 1 (LVDS only)			*(4)*		500	Mbps
$f_{HSDRDPA}$ (DPA data rate)	J = 4 to 10 (LVDS, HyperTransport technology)			150		840	Mbps
TCCS	All differential I/O standards			-		200	ps
SW	All differential I/O standards			440		-	ps
Output jitter						190	ps
Output t_{RISE}	All differential I/O standards					290	ps
Output t_{FALL}	All differential I/O standards					290	ps
t_{DUTY}				45	50	55	%
DPA run length						6,400	UI
DPA jitter tolerance	Data channel peak-to-peak jitter			0.44			UI
DPA lock time	**Standard**	**Training Pattern**	**Transition Density**				Number of repetitions
	SPI-4	0000000000 1111111111	10%	256			
	Parallel Rapid I/O	00001111	25%	256			
		10010000	50%	256			
	Miscellaneous	10101010	100%	256			
		01010101		256			

Notes to Table 5–91:

(1) When J = 4 to 10, the SERDES block is used.

(2) When J = 1 or 2, the SERDES block is bypassed.

(3) The input clock frequency and the W factor must satisfy the following fast PLL VCO specification: 150 ≤ input clock frequency × W ≤ 1,040.

(4) The minimum specification is dependent on the clock source (fast PLL, enhanced PLL, clock pin, and so on) and the clock routing resource (global, regional, or local) utilized. The I/O differential buffer and input register do not have a minimum toggle rate.

PLL Timing Specifications

Tables 5–92 and 5–93 describe the Stratix II PLL specifications when operating in both the commercial junction temperature range (0 to 85 °C) and the industrial junction temperature range (–40 to 100 °C).

Table 5–92. Enhanced PLL Specifications (Part 1 of 2)

Name	Description	Min	Typ	Max	Unit
f_{IN}	Input clock frequency	2		500	MHz
f_{INPFD}	Input frequency to the PFD	2		420	MHz
f_{INDUTY}	Input clock duty cycle	40		60	%
$f_{EINDUTY}$	External feedback input clock duty cycle	40		60	%
$t_{INJITTER}$	Input or external feedback clock input jitter tolerance in terms of period jitter. Bandwidth ≤ 0.85 MHz		0.5		ns (p-p)
	Input or external feedback clock input jitter tolerance in terms of period jitter. Bandwidth > 0.85 MHz		1.0		ns (p-p)
$t_{OUTJITTER}$	Dedicated clock output period jitter			250 ps for ≥ 100 MHz `outclk` 25 mUI for < 100 MHz `outclk`	ps or mUI (p-p)
t_{FCOMP}	External feedback compensation time			10	ns
f_{OUT}	Output frequency for internal global or regional clock	1.5 *(2)*		550.0	MHz
$t_{OUTDUTY}$	Duty cycle for external clock output (when set to 50%).	45	50	55	%
$f_{SCANCLK}$	Scanclk frequency			100	MHz
$t_{CONFIGPLL}$	Time required to reconfigure scan chains for enhanced PLLs		$174/f_{SCANCLK}$		ns
f_{OUT_EXT}	PLL external clock output frequency	1.5 *(2)*		550.0 *(1)*	MHz

Table 5–92. Enhanced PLL Specifications (Part 2 of 2)

Name	Description	Min	Typ	Max	Unit
t_{LOCK}	Time required for the PLL to lock from the time it is enabled or the end of device configuration		0.03	1	ms
t_{DLOCK}	Time required for the PLL to lock dynamically after automatic clock switchover between two identical clock frequencies			1	ms
$f_{SWITCHOVER}$	Frequency range where the clock switchover performs properly	4		500	MHz
f_{CLBW}	PLL closed-loop bandwidth	0.13	1.20	16.90	MHz
f_{VCO}	PLL VCO operating range for –3 and –4 speed grade devices	300		1,040	MHz
	PLL VCO operating range for –5 speed grade devices	300		840	MHz
f_{SS}	Spread-spectrum modulation frequency	30		150	kHz
% spread	Percent down spread for a given clock frequency	0.4	0.5	0.6	%
t_{PLL_PSERR}	Accuracy of PLL phase shift			±15	ps
t_{ARESET}	Minimum pulse width on `areset` signal.	10			ns
$t_{ARESET_RECONFIG}$	Minimum pulse width on the `areset` signal when using PLL reconfiguration. Reset the PLL after `scandone` goes high.	500			ns

Notes to Table 5–92:

(1) Limited by I/O f_{MAX}. See Table 5–78 on page 5–69 for the maximum. Cannot exceed f_{OUT} specification.

(2) If the counter cascading feature of the PLL is utilized, there is no minimum output clock frequency.

Table 5–93. Fast PLL Specifications

Name	Description	Min	Typ	Max	Unit
f_{IN}	Input clock frequency (for -3 and -4 speed grade devices)	16.08		717	MHz
	Input clock frequency (for -5 speed grade devices)	16.08		640	MHz
f_{INPFD}	Input frequency to the PFD	16.08		500	MHz
f_{INDUTY}	Input clock duty cycle	40		60	%
$t_{INJITTER}$	Input clock jitter tolerance in terms of period jitter. Bandwidth ≤ 2 MHz		0.5		ns (p-p)
	Input clock jitter tolerance in terms of period jitter. Bandwidth > 2 MHz		1.0		ns (p-p)
f_{VCO}	Upper VCO frequency range for –3 and –4 speed grades	300		1,040	MHz
	Upper VCO frequency range for –5 speed grades	300		840	MHz
	Lower VCO frequency range for –3 and –4 speed grades	150		520	MHz
	Lower VCO frequency range for –5 speed grades	150		420	MHz
f_{OUT}	PLL output frequency to GCLK or RCLK	4.6875		550	MHz
	PLL output frequency to LVDS or DPA clock	150		1,040	MHz
f_{OUT_IO}	PLL clock output frequency to regular I/O pin	4.6875		*(1)*	MHz
$f_{SCANCLK}$	Scanclk frequency			100	MHz
$t_{CONFIGPLL}$	Time required to reconfigure scan chains for fast PLLs		$75/f_{SCANCLK}$		ns
f_{CLBW}	PLL closed-loop bandwidth	1.16	5.00	28.00	MHz
t_{LOCK}	Time required for the PLL to lock from the time it is enabled or the end of the device configuration		0.03	1.00	ms
t_{PLL_PSERR}	Accuracy of PLL phase shift			±15	ps
t_{ARESET}	Minimum pulse width on areset signal.	10			ns
$t_{ARESET_RECONFIG}$	Minimum pulse width on the areset signal when using PLL reconfiguration. Reset the PLL after scandone goes high.	500			ns

Note to Table 5–93:
(1) Limited by I/O f_{MAX}. See Table 5–77 on page 5–67 for the maximum.

External Memory Interface Specifications

Tables 5–94 through 5–101 contain Stratix II device specifications for the dedicated circuitry used for interfacing with external memory devices.

Table 5–94. DLL Frequency Range Specifications

Frequency Mode	Frequency Range	Resolution (Degrees)
0	100 to 175	30
1	150 to 230	22.5
2	200 to 310	30
3	240 to 400 (–3 speed grade)	36
	240 to 350 (–4 and –5 speed grades)	36

Table 5–95 lists the maximum delay in the fast timing model for the Stratix II DQS delay buffer. Multiply the number of delay buffers that you are using in the DQS logic block to get the maximum delay achievable in your system. For example, if you implement a 90° phase shift at 200 MHz, you use three delay buffers in mode 2. The maximum achievable delay from the DQS block is then 3 × .416 ps = 1.248 ns.

Table 5–95. DQS Delay Buffer Maximum Delay in Fast Timing Model

Frequency Mode	Maximum Delay Per Delay Buffer (Fast Timing Model)	Unit
0	0.833	ns
1, 2, 3	0.416	ns

Table 5–96. DQS Period Jitter Specifications for DLL-Delayed Clock (tDQS_JITTER) *Note (1)*

Number of DQS Delay Buffer Stages *(2)*	Commercial	Industrial	Unit
1	80	110	ps
2	110	130	ps
3	130	180	ps
4	160	210	ps

Notes to Table 5–96:
(1) Peak-to-peak period jitter on the phase shifted DQS clock.
(2) Delay stages used for requested DQS phase shift are reported in your project's Compilation Report in the Quartus II software.

Table 5–97. DQS Phase Jitter Specifications for DLL-Delayed Clock (tDQS PHASE_JITTER) Note (1)

Number of DQS Delay Buffer Stages (2)	DQS Phase Jitter	Unit
1	30	ps
2	60	ps
3	90	ps
4	120	ps

Notes to Table 5–97:
(1) Peak-to-peak phase jitter on the phase shifted DDS clock (digital jitter is caused by DLL tracking).
(2) Delay stages used for requested DQS phase shift are reported in your project's Compilation Report in the Quartus II software.

Table 5–98. DQS Phase-Shift Error Specifications for DLL-Delayed Clock (tDQS_PSERR) (1)

Number of DQS Delay Buffer Stages (2)	–3 Speed Grade	–4 Speed Grade	–5 Speed Grade	Unit
1	25	30	35	ps
2	50	60	70	ps
3	75	90	105	ps
4	100	120	140	ps

Notes to Table 5–98:
(1) This error specification is the absolute maximum and minimum error. For example, skew on three delay buffer stages in a C3 speed grade is 75 ps or ± 37.5 ps.
(2) Delay stages used for requested DQS phase shift are reported in your project's Compilation Report in the Quartus II software.

Table 5–99. DQS Bus Clock Skew Adder Specifications (tDQS_CLOCK_SKEW_ADDER)

Mode	DQS Clock Skew Adder	Unit
×4 DQ per DQS	40	ps
×9 DQ per DQS	70	ps
×18 DQ per DQS	75	ps
×36 DQ per DQS	95	ps

Note to Table 5–99:
(1) This skew specification is the absolute maximum and minimum skew. For example, skew on a ×4 DQ group is 40 ps or ±20 ps.

Table 5–100. DQS Phase Offset Delay Per Stage Notes (1), (2), (3)			
Speed Grade	**Min**	**Max**	**Unit**
-3	9	14	ps
-4	9	14	ps
-5	9	15	ps

Notes to Table 5–100:
(1) The delay settings are linear.
(2) The valid settings for phase offset are -64 to +63 for frequency mode 0 and -32 to +31 for frequency modes 1, 2, and 3.
(3) The typical value equals the average of the minimum and maximum values.

Table 5–101. DDIO Outputs Half-Period Jitter Notes (1), (2)			
Name	**Description**	**Max**	**Unit**
$t_{OUTHALFJITTER}$	Half-period jitter (PLL driving DDIO outputs)	200	ps

Notes to Table 5–101:
(1) The worst-case half period is equal to the ideal half period subtracted by the DCD and half-period jitter values.
(2) The half-period jitter was characterized using a PLL driving DDIO outputs.

JTAG Timing Specifications

Figure 5–10 shows the timing requirements for the JTAG signals.

Figure 5–10. Stratix II JTAG Waveforms

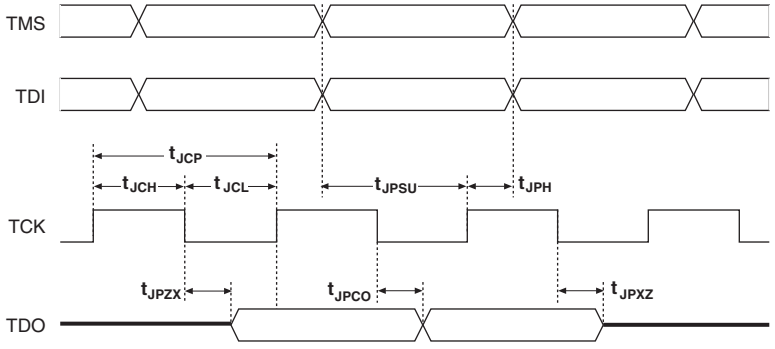

Table 5–102 shows the JTAG timing parameters and values for Stratix II devices.

Table 5–102. Stratix II JTAG Timing Parameters & Values

Symbol	Parameter	Min	Max	Unit
t_{JCP}	TCK clock period	30		ns
t_{JCH}	TCK clock high time	13		ns
t_{JCL}	TCK clock low time	13		ns
t_{JPSU}	JTAG port setup time	3		ns
t_{JPH}	JTAG port hold time	5		ns
t_{JPCO}	JTAG port clock to output		11 *(1)*	ns
t_{JPZX}	JTAG port high impedance to valid output		14 *(1)*	ns
t_{JPXZ}	JTAG port valid output to high impedance		14 *(1)*	ns

Note to Table 5–102:

(1) A 1 ns adder is required for each V_{CCIO} voltage step down from 3.3 V. For example, t_{JPCO} = 12 ns if V_{CCIO} of the TDO I/O bank = 2.5 V, or 13 ns if it equals 1.8 V.

Document Revision History

Table 5–103 shows the revision history for this chapter.

Table 5–103. Document Revision History (Part 1 of 3)

Date and Document Version	Changes Made	Summary of Changes
April 2011, v4.5	Updated Table 5–3.	Added operating junction temperature for military use.
July 2009, v4.4	Updated Table 5–92.	Updated the spread spectrum modulation frequency (f_{SS}) from (100 kHz–500 kHz) to (30 kHz–150 kHz).
May 2007, v4.3	• Updated R_{CONF} in Table 5–4. • Updated f_{IN} (min) in Table 5–92. • Updated f_{IN} and f_{INPFD} in Table 5–93.	—
	Moved the Document Revision History section to the end of the chapter.	—

Table 5–103. Document Revision History (Part 2 of 3)

Date and Document Version	Changes Made	Summary of Changes
August, 2006, v4.2	Updated Table 5–73, Table 5–75, Table 5–77, Table 5–78, Table 5–79, Table 5–81, Table 5–85, and Table 5–87.	—
April 2006, v4.1	• Updated Table 5–3. • Updated Table 5–11. • Updated Figures 5–8 and 5–9. • Added parallel on-chip termination information to "On-Chip Termination Specifications" section. • Updated Tables 5–28, 5–30,5–31, and 5–34. • Updated Table 5–78, Tables 5–81 through 5–90, and Tables 5–92, 5–93, and 5–98. • Updated "PLL Timing Specifications" section. • Updated "External Memory Interface Specifications" section. • Added Tables 5–95 and 5–101. • Updated "JTAG Timing Specifications" section, including Figure 5–10 and Table 5–102.	• Changed 0.2 MHz to 2 MHz in Table 5–93. • Added new spec for half period jitter (Table 5–101). • Added support for PLL clock switchover for industrial temperature range. • Changed f_{INPFD} (min) spec from 4 MHz to 2 MHz in Table 5–92. • Fixed typo in $t_{OUTJITTER}$ specification in Table 5–92. • Updated V_{DIF} AC & DC max specifications in Table 5–28. • Updated minimum values for t_{JCH}, t_{JCL}, and t_{JPSU} in Table 5–102. • Update maximum values for t_{JPCO}, t_{JPZX}, and t_{JPXZ} in Table 5–102.
December 2005, v4.0	• Updated "External Memory Interface Specifications" section. • Updated timing numbers throughout chapter.	—
July 2005, v3.1	• Updated HyperTransport technology information in Table 5–13. • Updated "Timing Model" section. • Updated "PLL Timing Specifications" section. • Updated "External Memory Interface Specifications" section.	—
May 2005, v3.0	• Updated tables throughout chapter. • Updated "Power Consumption" section. • Added various tables. • Replaced "Maximum Input & Output Clock Rate" section with "Maximum Input & Output Clock Toggle Rate" section. • Added "Duty Cycle Distortion" section. • Added "External Memory Interface Specifications" section.	—
March 2005, v2.2	Updated tables in "Internal Timing Parameters" section.	—
January 2005, v2.1	Updated input rise and fall time.	—

Table 5–103. Document Revision History (Part 3 of 3)

Date and Document Version	Changes Made	Summary of Changes
January 2005, v2.0	• Updated the "Power Consumption" section. • Added the "High-Speed I/O Specifications" and "On-Chip Termination Specifications" sections. • Removed the ESD Protection Specifications section. • Updated Tables 5–3 through 5–13, 5–16 through 5–18, 5–21, 5–35, 5–39, and 5–40. • Updated tables in "Timing Model" section. • Added Tables 5–30 and 5–31.	—
October 2004, v1.2	• Updated Table 5–3. • Updated introduction text in the "PLL Timing Specifications" section.	—
July 2004, v1.1	• Re-organized chapter. • Added typical values and C_{OUTFB} to Table 5–32. • Added undershoot specification to Note (4) for Tables 5–1 through 5–9. • Added Note (1) to Tables 5–5 and 5–6. • Added V_{ID} and V_{ICM} to Table 5–10. • Added "I/O Timing Measurement Methodology" section. • Added Table 5–72. • Updated Tables 5–1 through 5–2 and Tables 5–24 through 5–29.	—
February 2004, v1.0	Added document to the Stratix II Device Handbook.	—

6. Reference & Ordering Information

SII51006-2.2

Software

Stratix® II devices are supported by the Altera® Quartus® II design software, which provides a comprehensive environment for system-on-a-programmable-chip (SOPC) design. The Quartus II software includes HDL and schematic design entry, compilation and logic synthesis, full simulation and advanced timing analysis, SignalTap® II logic analyzer, and device configuration. See the *Quartus II Handbook* for more information on the Quartus II software features.

The Quartus II software supports the Windows XP/2000/NT/98, Sun Solaris, Linux Red Hat v7.1 and HP-UX operating systems. It also supports seamless integration with industry-leading EDA tools through the NativeLink® interface.

Device Pin-Outs

Device pin-outs for Stratix II devices are available on the Altera web site at (**www.altera.com**).

Ordering Information

Figure 6–1 describes the ordering codes for Stratix II devices. For more information on a specific package, refer to the *Package Information for Stratix II & Stratix II GX Devices* chapter in volume 2 of the *Stratix II Device Handbook* or the *Stratix II GX Device Handbook*.

Figure 6–1. Stratix II Device Packaging Ordering Information

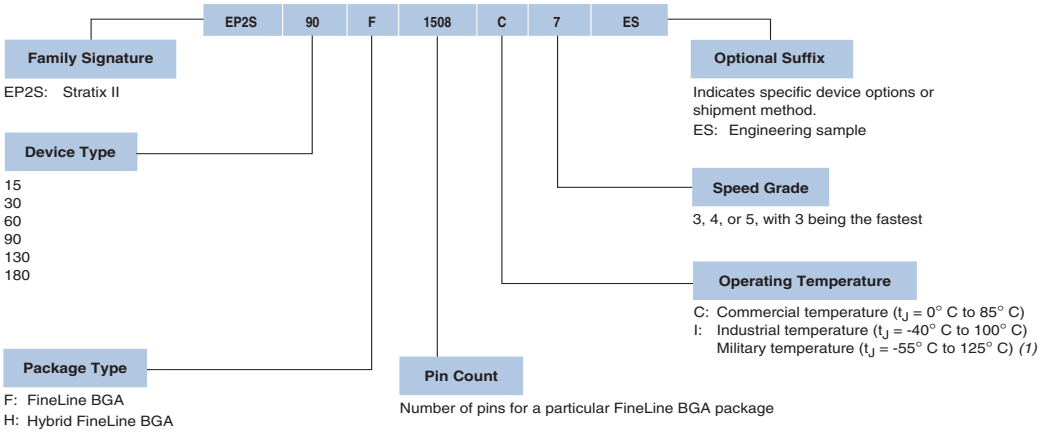

Note to Figure 6–1:
(1) Applicable to I4 devices. For more information, refer to the *Stratix II Military Temperature Range Support* technical brief.

Document Revision History

Table 6–1 shows the revision history for this chapter.

Table 6–1. Document Revision History

Date and Document Version	Changes Made	Summary of Changes
April 2011, v2.2	Updated Figure 6–1.	Added operating junction temperature for military use.
May 2007, v2.1	Moved the Document Revision History section to the end of the chapter.	—
January 2005, v2.0	Contact information was removed.	—
October 2004, v1.1	Updated Figure 6–1.	—
February 2004, v1.0	Added document to the Stratix II Device Handbook.	—



Stratix II Device Handbook, Volume 2



101 Innovation Drive
San Jose, CA 95134
www.altera.com

SII5V2-4.5

Copyright © 2009 Altera Corporation. All rights reserved. Altera, The Programmable Solutions Company, the stylized Altera logo, specific device designations, and all other words and logos that are identified as trademarks and/or service marks are, unless noted otherwise, the trademarks and service marks of Altera Corporation in the U.S. and other countries. All other product or service names are the property of their respective holders. Altera products are protected under numerous U.S. and foreign patents and pending applications, maskwork rights, and copyrights. Altera warrants performance of its semiconductor products to current specifications in accordance with Altera's standard warranty, but reserves the right to make changes to any products and services at any time without notice. Altera assumes no responsibility or liability arising out of the application or use of any information, product, or service described herein except as expressly agreed to in writing by Altera Corporation. Altera customers are advised to obtain the latest version of device specifications before relying on any published information and before placing orders for products or services.

Altera Lead-Free

I.S. EN ISO 9001

Contents

Chapter Revision Dates xi

About this Handbook xiii
How to Contact Altera xiii
Typographic Conventions xiii

Section I. Clock Management
Revision History ..... Section I–1

Chapter 1. PLLs in Stratix II and Stratix II GX Devices
Introduction 1–1
Enhanced PLLs 1–5
Enhanced PLL Hardware Overview 1–5
Enhanced PLL Software Overview 1–9
Enhanced PLL Pins 1–12
Fast PLLs 1–15
Fast PLL Hardware Overview 1–15
Fast PLL Software Overview 1–16
Fast PLL Pins 1–18
Clock Feedback Modes 1–20
Source-Synchronous Mode 1–20
No Compensation Mode 1–21
Normal Mode 1–22
Zero Delay Buffer Mode 1–23
External Feedback Mode 1–24
Hardware Features 1–25
Clock Multiplication and Division 1–26
Phase-Shift Implementation 1–27
Programmable Duty Cycle 1–29
Advanced Clear and Enable Control 1–29
Advanced Features 1–32
Counter Cascading 1–32
Clock Switchover 1–33
Reconfigurable Bandwidth 1–44
PLL Reconfiguration 1–51
Spread-Spectrum Clocking 1–51
Board Layout 1–56
V_{CCA} and GNDA 1–56

V_{CCD} 1–58
External Clock Output Power 1–58
Guidelines 1–61
PLL Specifications 1–62
Clocking 1–62
Global and Hierarchical Clocking 1–62
Clock Sources Per Region 1–64
Clock Input Connections 1–69
Clock Source Control For Enhanced PLLs 1–73
Clock Source Control for Fast PLLs 1–73
Delay Compensation for Fast PLLs 1–75
Clock Output Connections 1–76
Clock Control Block 1–86
clkena Signals 1–90
Conclusion 1–91
Referenced Documents 1–91
Document Revision History 1–92

Section II. Memory

Revision History ..... Section II–1

Chapter 2. TriMatrix Embedded Memory Blocks in Stratix II and Stratix II GX Devices

Introduction 2–1
TriMatrix Memory Overview 2–1
Parity Bit Support 2–3
Byte Enable Support 2–4
Pack Mode Support 2–7
Address Clock Enable Support 2–8
Memory Modes 2–9
Single-Port Mode 2–10
Simple Dual-Port Mode 2–12
True Dual-Port Mode 2–15
Shift-Register Mode 2–18
ROM Mode 2–20
FIFO Buffers Mode 2–20
Clock Modes 2–20
Independent Clock Mode 2–21
Input/Output Clock Mode 2–23
Read/Write Clock Mode 2–26
Single-Clock Mode 2–28
Designing With TriMatrix Memory 2–31
Selecting TriMatrix Memory Blocks 2–31
Synchronous and Pseudo-Asynchronous Modes 2–32
Power-up Conditions and Memory Initialization 2–32
Read-During-Write Operation at the Same Address 2–33

Same-Port Read-During-Write Mode 2–33
Mixed-Port Read-During-Write Mode 2–34
Conclusion 2–35
Referenced Documents 2–36
Document Revision History 2–36

Chapter 3. External Memory Interfaces in Stratix II and Stratix II GX Devices

Introduction 3–1
External Memory Standards 3–4
DDR and DDR2 SDRAM 3–4
RLDRAM II 3–8
QDRII SRAM 3–10
Stratix II and Stratix II GX DDR Memory Support Overview 3–13
DDR Memory Interface Pins 3–14
DQS Phase-Shift Circuitry 3–21
DQS Logic Block 3–28
DDR Registers 3–31
PLL 3–38
Enhancements In Stratix II and Stratix II GX Devices 3–38
Conclusion 3–38
Referenced Documents 3–39
Document Revision History 3–39

Section III. I/O Standards

Revision History ..... Section III–1

Chapter 4. Selectable I/O Standards in Stratix II and Stratix II GX Devices

Introduction 4–1
Stratix II and Stratix II GX I/O Features 4–1
Stratix II and Stratix II GX I/O Standards Support 4–2
Single-Ended I/O Standards 4–3
Differential I/O Standards 4–10
Stratix II and Stratix II GX External Memory Interface 4–19
Stratix II and Stratix II GX I/O Banks 4–20
Programmable I/O Standards 4–22
On-Chip Termination 4–27
On-Chip Series Termination without Calibration 4–28
On-Chip Series Termination with Calibration 4–30
On-Chip Parallel Termination with Calibration 4–31
Design Considerations 4–33
I/O Termination 4–33
I/O Banks Restrictions 4–34
I/O Placement Guidelines 4–36
DC Guidelines 4–39
Conclusion 4–42

References 4–42
Referenced Documents 4–43
Document Revision History 4–44

Chapter 5. High-Speed Differential I/O Interfaces with DPA in Stratix II and Stratix II GX Devices

Introduction 5–1
I/O Banks 5–1
Differential Transmitter 5–6
Differential Receiver 5–8
Receiver Data Realignment Circuit 5–9
Dynamic Phase Aligner 5–10
Synchronizer 5–12
Differential I/O Termination 5–12
Fast PLL 5–13
Clocking 5–14
Source Synchronous Timing Budget 5–16
Differential Data Orientation 5–17
Differential I/O Bit Position 5–17
Receiver Skew Margin for Non-DPA 5–19
Differential Pin Placement Guidelines 5–21
High-Speed Differential I/Os and Single-Ended I/Os 5–21
DPA Usage Guidelines 5–22
Non-DPA Differential I/O Usage Guidelines 5–26
Board Design Considerations 5–27
Conclusion 5–28
Referenced Documents 5–29
Document Revision History 5–29

Section IV. Digital Signal Processing (DSP)

Revision History ..... Section IV–1

Chapter 6. DSP Blocks in Stratix II and Stratix II GX Devices

Introduction 6–1
DSP Block Overview 6–1
Architecture 6–8
Multiplier Block 6–8
Adder/Output Block 6–16
Operational Modes 6–21
Simple Multiplier Mode 6–22
Multiply Accumulate Mode 6–25
Multiply Add Mode 6–26
Software Support 6–32
Conclusion 6–32
Referenced Documents 6–33

Document Revision History 6–33

Section V. Configuration & Remote System Upgrades

Revision History ..... Section V–1

Chapter 7. Configuring Stratix II and Stratix II GX Devices

Introduction 7–1
Configuration Devices 7–1
Configuration Features 7–4
Configuration Data Decompression 7–5
Design Security Using Configuration Bitstream Encryption 7–8
Remote System Upgrade 7–9
Power-On Reset Circuit 7–9
V_{CCPD} Pins 7–10
VCCSEL Pin 7–10
Output Configuration Pins 7–13
Fast Passive Parallel Configuration 7–14
FPP Configuration Using a MAX II Device as an External Host 7–15
FPP Configuration Using a Microprocessor 7–26
FPP Configuration Using an Enhanced Configuration Device 7–26
Active Serial Configuration (Serial Configuration Devices) 7–34
Estimating Active Serial Configuration Time 7–43
Programming Serial Configuration Devices 7–43
Passive Serial Configuration 7–46
PS Configuration Using a MAX II Device as an External Host 7–47
PS Configuration Using a Microprocessor 7–54
PS Configuration Using a Configuration Device 7–55
PS Configuration Using a Download Cable 7–67
Passive Parallel Asynchronous Configuration 7–73
JTAG Configuration 7–84
Jam STAPL 7–91
Device Configuration Pins 7–92
Conclusion 7–106
Referenced Documents 7–106
Document Revision History 7–107

Chapter 8. Remote System Upgrades with Stratix II and Stratix II GX Devices

Introduction 8–1
Functional Description 8–2
Configuration Image Types and Pages 8–5
Remote System Upgrade Modes 8–8
Overview 8–8
Remote Update Mode 8–9
Local Update Mode 8–12
Dedicated Remote System Upgrade Circuitry 8–14

Remote System Upgrade Registers 8–15
Remote System Upgrade State Machine 8–19
User Watchdog Timer 8–20
Interface Signals between Remote System Upgrade Circuitry and FPGA Logic Array 8–21
Remote System Upgrade Pin Descriptions 8–23
Quartus II Software Support 8–24
altremote_update Megafunction 8–24
Remote System Upgrade Atom 8–28
System Design Guidelines 8–28
Remote System Upgrade With Serial Configuration Devices 8–29
Remote System Upgrade With a MAX II Device or Microprocessor and Flash Device 8–29
Remote System Upgrade with Enhanced Configuration Devices 8–30
Conclusion 8–31
Referenced Documents 8–31
Document Revision History 8–32

Chapter 9. IEEE 1149.1 (JTAG) Boundary-Scan Testing for Stratix II and Stratix II GX Devices

Introduction 9–1
IEEE Std. 1149.1 BST Architecture 9–2
IEEE Std. 1149.1 Boundary-Scan Register 9–4
Boundary-Scan Cells of a Stratix II or Stratix II GX Device I/O Pin 9–5
IEEE Std. 1149.1 BST Operation Control 9–7
SAMPLE/PRELOAD Instruction Mode 9–11
Capture Phase 9–12
Shift and Update Phases 9–12
EXTEST Instruction Mode 9–13
Capture Phase 9–14
Shift and Update Phases 9–14
BYPASS Instruction Mode 9–15
IDCODE Instruction Mode 9–16
USERCODE Instruction Mode 9–16
CLAMP Instruction Mode 9–17
HIGHZ Instruction Mode 9–17
I/O Voltage Support in JTAG Chain 9–17
Using IEEE Std. 1149.1 BST Circuitry 9–19
BST for Configured Devices 9–19
Disabling IEEE Std. 1149.1 BST Circuitry 9–20
Guidelines for IEEE Std. 1149.1 Boundary-Scan Testing 9–20
Boundary-Scan Description Language (BSDL) Support 9–21
Conclusion 9–21
References 9–22
Referenced Documents 9–22
Document Revision History 9–22

Section VI. PCB Layout Guidelines

Revision History ..... Section VI–1

Chapter 10. Package Information for Stratix II & Stratix II GX Devices

Introduction 10–1
Thermal Resistance 10–2
Package Outlines 10–5
484-Pin FBGA - Flip Chip 10–5
672-Pin FBGA - Flip Chip 10–6
780-Pin FBGA - Flip Chip 10–9
1,020-Pin FBGA - Flip Chip 10–11
1,152-Pin FBGA - Flip Chip 10–13
1,508-Pin FBGA - Flip Chip 10–15
Document Revision History 10–17

Chapter 11. High-Speed Board Layout Guidelines

Introduction 11–1
PCB Material Selection 11–1
Transmission Line Layout 11–3
Impedance Calculation 11–4
Propagation Delay 11–8
Pre-Emphasis 11–9
Routing Schemes for Minimizing Crosstalk & Maintaining Signal Integrity 11–11
Signal Trace Routing 11–13
Termination Schemes 11–19
Simple Parallel Termination 11–19
Thevenin Parallel Termination 11–20
Active Parallel Termination 11–21
Series-RC Parallel Termination 11–22
Series Termination 11–23
Differential Pair Termination 11–23
Simultaneous Switching Noise 11–24
Power Filtering & Distribution 11–26
Electromagnetic Interference (EMI) 11–28
Additional FPGA-Specific Information 11–29
Configuration 11–29
JTAG 11–30
Test Point 11–30
Summary 11–30
References 11–31
Document Revision History 11–31

Chapter Revision Dates

The chapters in this book, *Stratix II Device Handbook, Volume 2*, were revised on the following dates. Where chapters or groups of chapters are available separately, part numbers are listed.

Chapter 1. PLLs in Stratix II and Stratix II GX Devices
Revised: *July 2009*
Part number: *SII52001-4.6*

Chapter 2. TriMatrix Embedded Memory Blocks in Stratix II and Stratix II GX Devices
Revised: *January 2008*
Part number: *SII52002-4.5*

Chapter 3. External Memory Interfaces in Stratix II and Stratix II GX Devices
Revised: *January 2008*
Part number: *SII52003-4.5*

Chapter 4. Selectable I/O Standards in Stratix II and Stratix II GX Devices
Revised: *January 2008*
Part number: *SII52004-4.6*

Chapter 5. High-Speed Differential I/O Interfaces with DPA in Stratix II and Stratix II GX Devices
Revised: *January 2008*
Part number: *SII52005-2.2*

Chapter 6. DSP Blocks in Stratix II and Stratix II GX Devices
Revised: *January 2008*
Part number: *SII52006-2.2*

Chapter 7. Configuring Stratix II and Stratix II GX Devices
Revised: *January 2008*
Part number: *SII52007-4.5*

Chapter 8. Remote System Upgrades with Stratix II and Stratix II GX Devices
Revised: *January 2008*
Part number: *SII52008-4.5*

Chapter 9. IEEE 1149.1 (JTAG) Boundary-Scan Testing for Stratix II and Stratix II GX Devices
Revised: *January 2008*
Part number: *SII52009-3.3*

Chapter 10. Package Information for Stratix II & Stratix II GX Devices
Revised: *May 2007*
Part number: *SII52010-4.3*

Chapter 11. High-Speed Board Layout Guidelines
Revised: *May 2007*
Part number: *SII52012-1.4*

About this Handbook

This handbook provides comprehensive information about the Altera® Stratix® II family of devices.

How to Contact Altera

For the most up-to-date information about Altera products, refer to the following table.

Contact *(1)*	Contact Method	Address
Technical support	Website	www.altera.com/support
Technical training	Website	www.altera.com/training
	Email	custrain@altera.com
Product literature	Website	www.altera.com/literature
Non-technical support (General)	Email	nacomp@altera.com
(Software Licensing)	Email	authorization@altera.com

Note to table:
(1) You can also contact your local Altera sales office or sales representative.

Typographic Conventions

This document uses the typographic conventions shown below.

Visual Cue	Meaning
Bold Type with Initial Capital Letters	Command names, dialog box titles, checkbox options, and dialog box options are shown in bold, initial capital letters. Example: **Save As** dialog box.
bold type	External timing parameters, directory names, project names, disk drive names, filenames, filename extensions, and software utility names are shown in bold type. Examples: $\mathbf{f_{MAX}}$, **\qdesigns** directory, **d:** drive, **chiptrip.gdf** file.
Italic Type with Initial Capital Letters	Document titles are shown in italic type with initial capital letters. Example: *AN 75: High-Speed Board Design.*
Italic type	Internal timing parameters and variables are shown in italic type. Examples: t_{PIA}, $n + 1$. Variable names are enclosed in angle brackets (< >) and shown in italic type. Example: *<file name>*, *<project name>***.pof** file.

Visual Cue	Meaning
Initial Capital Letters	Keyboard keys and menu names are shown with initial capital letters. Examples: Delete key, the Options menu.
"Subheading Title"	References to sections within a document and titles of on-line help topics are shown in quotation marks. Example: "Typographic Conventions."
`Courier type`	Signal and port names are shown in lowercase Courier type. Examples: `data1`, `tdi`, `input.` Active-low signals are denoted by suffix `n`, e.g., `resetn`. Anything that must be typed exactly as it appears is shown in Courier type. For example: `c:\qdesigns\tutorial\chiptrip.gdf`. Also, sections of an actual file, such as a Report File, references to parts of files (e.g., the AHDL keyword `SUBDESIGN`), as well as logic function names (e.g., `TRI`) are shown in Courier.
1., 2., 3., and a., b., c., etc.	Numbered steps are used in a list of items when the sequence of the items is important, such as the steps listed in a procedure.
■ ● •	Bullets are used in a list of items when the sequence of the items is not important.
✓	The checkmark indicates a procedure that consists of one step only.
	The hand points to information that requires special attention.
	The caution indicates required information that needs special consideration and understanding and should be read prior to starting or continuing with the procedure or process.
	The warning indicates information that should be read prior to starting or continuing the procedure or processes
↵	The angled arrow indicates you should press the Enter key.
	The feet direct you to more information on a particular topic.

Section I. Clock Management

This section provides information on the different types of phase-locked loops (PLLs). The feature-rich enhanced PLLs assist designers in managing clocks internally and also have the ability to drive off chip to control system-level clock networks. The fast PLLs offer general-purpose clock management with multiplication and phase shifting as well as high-speed outputs to manage the high-speed differential I/O interfaces. This section contains detailed information on the features, the interconnections to the logic array and off chip, and the specifications for both types of PLLs.

This section contains the following chapter:

- Chapter 1, PLLs in Stratix II and Stratix II GX Devices

Revision History

Refer to each chapter for its own specific revision history. For information on when each chapter was updated, refer to the Chapter Revision Dates section, which appears in the full handbook.

1. PLLs in Stratix II and Stratix II GX Devices

SII52001-4.6

Introduction

Stratix® II and Stratix II GX device phase-locked loops (PLLs) provide robust clock management and synthesis for device clock management, external system clock management, and high-speed I/O interfaces. Stratix II devices have up to 12 PLLs, and Stratix II GX devices have up to 8 PLLs. Stratix II and Stratix II GX PLLs are highly versatile and can be used as a zero delay buffer, a jitter attenuator, low skew fan out buffer, or a frequency synthesizer.

Stratix II and Stratix II GX devices feature both enhanced PLLs and fast PLLs. Stratix II and Stratix II GX devices have up to four enhanced PLLs. Stratix II devices have up to eight fast PLLs and Stratix II GX devices have up to four PLLs. Both enhanced and fast PLLs are feature rich, supporting advanced capabilities such as clock switchover, reconfigurable phase shift, PLL reconfiguration, and reconfigurable bandwidth. PLLs can be used for general-purpose clock management, supporting multiplication, phase shifting, and programmable duty cycle. In addition, enhanced PLLs support external clock feedback mode, spread-spectrum clocking, and counter cascading. Fast PLLs offer high speed outputs to manage the high-speed differential I/O interfaces.

Stratix II and Stratix II GX devices also support a power-down mode where clock networks that are not being used can easily be turned off, reducing the overall power consumption of the device. In addition, Stratix II and Stratix II GX PLLs support dynamic selection of the PLL input clock from up to five possible sources, giving you the flexibility to choose from multiple (up to four) clock sources to feed the primary and secondary clock input ports.

The Altera® Quartus® II software enables the PLLs and their features without requiring any external devices.

Tables 1–1 and 1–2 show the PLLs available for each Stratix II and Stratix II GX device, respectively.

Table 1–1. Stratix II Device PLL Availability *Note (1)*

Device	Fast PLLs								Enhanced PLLs			
	1	2	3	4	7	8	9	10	5	6	11	12
EP2S15	✓	✓	✓	✓					✓	✓		
EP2S30	✓	✓	✓	✓					✓	✓		
EP2S60	✓	✓	✓	✓	✓	✓	✓	✓	✓	✓	✓	✓
EP2S90 *(2)*	✓	✓	✓	✓	✓	✓	✓	✓	✓	✓	✓	✓
EP2S130 *(3)*	✓	✓	✓	✓	✓	✓	✓	✓	✓	✓	✓	✓
EP2S180	✓	✓	✓	✓	✓	✓	✓	✓	✓	✓	✓	✓

Notes for Table 1–1:

(1) The EP2S60 device in the 1,020-pin package contains 12 PLLs. EP2S60 devices in the 484-pin and 672-pin packages contain fast PLLs 1–4 and enhanced PLLs 5 and 6.

(2) EP2S90 devices in the 1020-pin and 1508-pin packages contain 12 PLLs. EP2S90 devices in the 484-pin and 780-pin packages contain fast PLLs 1–4 and enhanced PLLs 5 and 6.

(3) EP2S130 devices in the 1020-pin and 1508-pin packages contain 12 PLLs. The EP2S130 device in the 780-pin package contains fast PLLs 1–4 and enhanced PLLs 5 and 6.

Table 1–2. Stratix II GX Device PLL Availability *Note (1)*

Device	Fast PLLs								Enhanced PLLs			
	1	2	3 *(3)*	4 *(3)*	7	8	9 *(3)*	10 *(3)*	5	6	11	12
EP2SGX30 *(2)*	✓	✓							✓	✓		
EP2SGX60 *(2)*	✓	✓			✓	✓			✓	✓	✓	✓
EP2SGX90	✓	✓			✓	✓			✓	✓	✓	✓
EP2SGX130	✓	✓			✓	✓			✓	✓	✓	✓

Notes for Table 1–2:

(1) The global or regional clocks in a fast PLL's transceiver block can drive the fast PLL input. A pin or other PLL must drive the global or regional source. The source cannot be driven by internally generated logic before driving the fast PLL.

(2) EP2SGX30C and EP2SGX60C devices only have two fast PLLs (PLLs 1 and 2), but the connectivity from these two PLLs to the global and regional clock networks remains the same as shown in this table.

(3) PLLs 3, 4, 9, and 10 are not available in Stratix II GX devices. however, these PLLs are listed in Table 1–2 because the Stratix II GX PLL numbering scheme is consistent with Stratix and Stratix II devices.

Table 1–3 shows the enhanced PLL and fast PLL features in Stratix II and Stratix II GX devices.

Table 1–3. Stratix II and Stratix II GX PLL Features

Feature	Enhanced PLL	Fast PLL
Clock multiplication and division	*m*/(*n* × post-scale counter) *(1)*	*m*/(*n* × post-scale counter) *(2)*
Phase shift	Down to 125-ps increments *(3)*	Down to 125-ps increments *(3)*
Clock switchover	✓	✓ *(4)*
PLL reconfiguration	✓	✓
Reconfigurable bandwidth	✓	✓
Spread-spectrum clocking	✓	
Programmable duty cycle	✓	✓
Number of clock outputs per PLL *(5)*	6	4
Number of dedicated external clock outputs per PLL	Three differential or six single-ended	*(6)*
Number of feedback clock inputs per PLL	1 *(7)*	

Notes to Table 1–3:

(1) For enhanced PLLs, *m* and *n* range from 1 to 512 with 50% duty cycle. Post-scale counters range from 1 to 512 with 50% duty cycle. For non-50% duty-cycle clock outputs, post-scale counters range from 1 to 256.

(2) For fast PLLs, *n* can range from 1 to 4. The post-scale and *m* counters range from 1 to 32. For non-50% duty-cycle clock outputs, post-scale counters range from 1 to 16.

(3) The smallest phase shift is determined by the voltage controlled oscillator (VCO) period divided by eight. The supported phase-shift range is from 125 to 250 ps. Stratix II and Stratix II GX devices can shift all output frequencies in increments of at least 45°. Smaller degree increments are possible depending on the frequency and divide parameters. For non-50% duty cycle clock outputs post-scale counters range from 1 to 256.

(4) Stratix II and Stratix II GX fast PLLs only support manual clock switchover.

(5) The clock outputs can be driven to internal clock networks or to a pin.

(6) The PLL clock outputs of the fast PLLs can drive to any I/O pin to be used as an external clock output. For high-speed differential I/O pins, the device uses a data channel to generate the transmitter output clock (`txclkout`).

(7) If the design uses external feedback input pins, you will lose one (or two, if f_{BIN} is differential) dedicated output clock pin.

Figure 1–1 shows a top-level diagram of Stratix II device and PLL locations. Figure 1–2 shows a top-level diagram of Stratix II device and PLL locations. See "Clock Control Block" on page 1–86 for more detail on PLL connections to global and regional clocks networks.

Figure 1–1. Stratix II PLL Locations

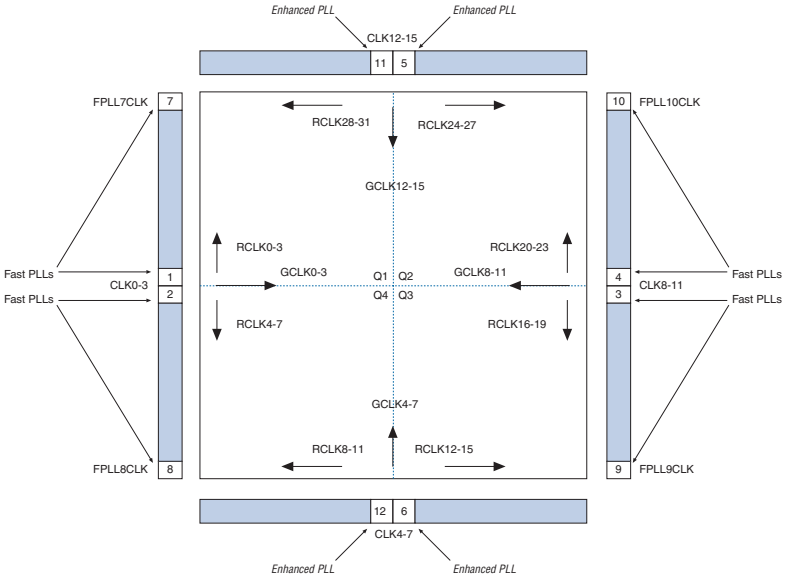

Figure 1–2. Stratix II GX PLL Locations

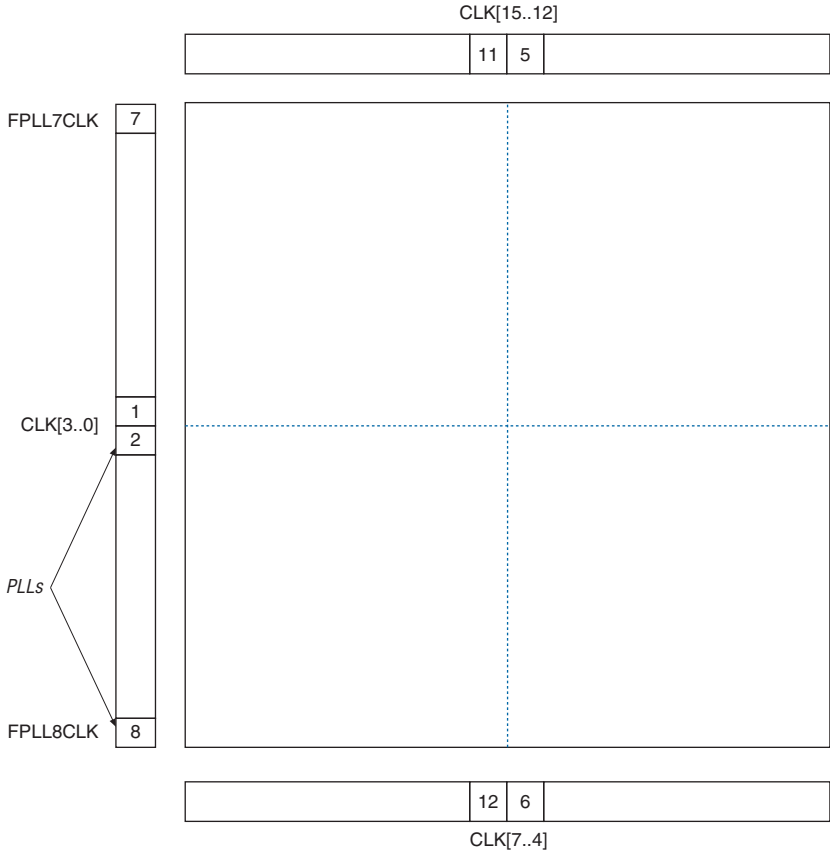

Enhanced PLLs

Stratix II and Stratix II GX devices contain up to four enhanced PLLs with advanced clock management features. The main goal of a PLL is to synchronize the phase and frequency of an internal and external clock to an input reference clock. There are a number of components that comprise a PLL to achieve this phase alignment.

Enhanced PLL Hardware Overview

Stratix II and Stratix II GX PLLs align the rising edge of the reference input clock to a feedback clock using the phase-frequency detector (PFD). The falling edges are determined by the duty-cycle specifications. The PFD produces an up or down signal that determines whether the VCO needs to operate at a higher or lower frequency.

The PFD output is applied to the charge pump and loop filter, which produces a control voltage for setting the VCO frequency. If the PFD produces an up signal, then the VCO frequency increases. A down signal decreases the VCO frequency. The PFD outputs these up and down signals to a charge pump. If the charge pump receives an up signal, current is driven into the loop filter. Conversely, if it receives a down signal, current is drawn from the loop filter.

The loop filter converts these up and down signals to a voltage that is used to bias the VCO. The loop filter also removes glitches from the charge pump and prevents voltage over-shoot, which filters the jitter on the VCO.

The voltage from the loop filter determines how fast the VCO operates. The VCO is implemented as a four-stage differential ring oscillator. A divide counter (*m*) is inserted in the feedback loop to increase the VCO frequency above the input reference frequency. VCO frequency (f_{VCO}) is equal to (*m*) times the input reference clock (f_{REF}). The input reference clock (f_{REF}) to the PFD is equal to the input clock (f_{IN}) divided by the pre-scale counter (*n*). Therefore, the feedback clock (f_{FB}) applied to one input of the PFD is locked to the f_{REF} that is applied to the other input of the PFD.

The VCO output can feed up to six post-scale counters (`C0`, `C1`, `C2`, `C3`, `C4`, and `C5`). These post-scale counters allow a number of harmonically related frequencies to be produced within the PLL.

Figure 1–3 shows a simplified block diagram of the major components of the Stratix II and Stratix II GX enhanced PLL. Figure 1–4 shows the enhanced PLL's outputs and dedicated clock outputs.

Figure 1–3. Stratix II and Stratix II GX Enhanced PLL

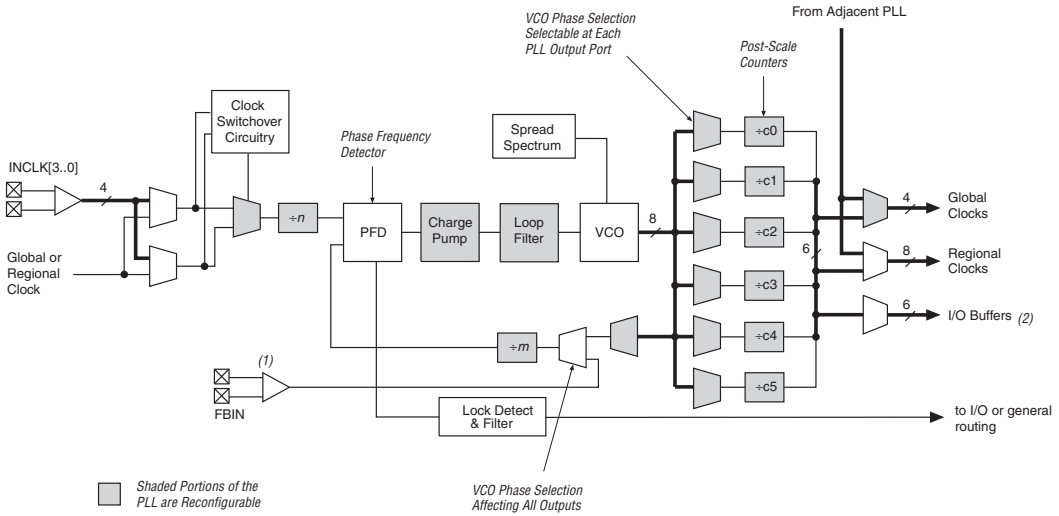

Notes to Figure 1–3:

(1) Each clock source can come from any of the four clock pins located on the same side of the device as the PLL.

(2) PLLs 5, 6, 11, and 12 each have six single-ended dedicated clock outputs or three differential dedicated clock outputs.

(3) If the design uses external feedback input pins, you will lose one (or two, if f_{BIN} is differential) dedicated output clock pin. Every Stratix II and Stratix II GX device has at least two enhanced PLLs with one single-ended or differential external feedback input per PLL.

(4) The global or regional clock input can be driven by an output from another PLL, a pin-driven dedicated global or regional clock, or through a clock control block provided the clock control block is fed by an output from another PLL or a pin-driven dedicated global or regional clock. An internally generated global signal cannot drive the PLL.

External Clock Outputs

Enhanced PLLs 5, 6, 11, and 12 each support up to six single-ended clock outputs (or three differential pairs). See Figure 1–4.

Figure 1–4. External Clock Outputs for Enhanced PLLs 5, 6, 11 and 12

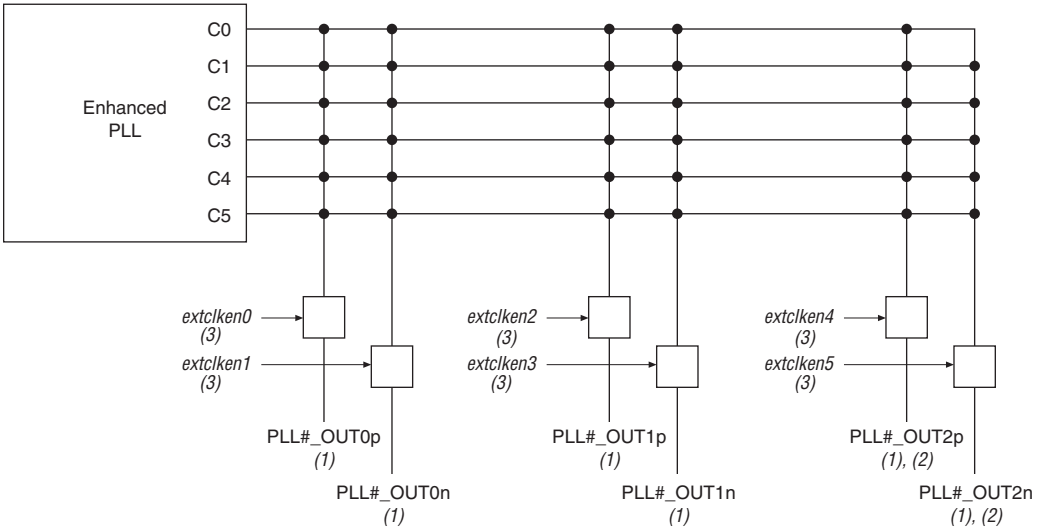

Notes to Figure 1–4:

(1) These clock output pins can be fed by any one of the `C[5..0]` counters.

(2) These clock output pins are used as either external clock outputs or for external feedback. If the design uses external feedback input pins, you will lose one (or two, if f_{BIN} is differential) dedicated output clock pin.

(3) These external clock enable signals are available only when using the `altclkctrl` megafunction.

Any of the six output counters `C[5..0]` can feed the dedicated external clock outputs, as shown in Figure 1–5. Therefore, one counter or frequency can drive all output pins available from a given PLL. The dedicated output clock pins (`PLL_OUT`) from each enhanced PLL are powered by a separate power pin (e.g., `VCC_PLL5_OUT`, `VCC_PLL6_OUT`, etc.), reducing the overall output jitter by providing improved isolation from switching I/O pins.

Figure 1–5. External Clock Output Connectivity to PLL Output Counters for Enhanced PLLs 5, 6, 11 and 12 Note (1)

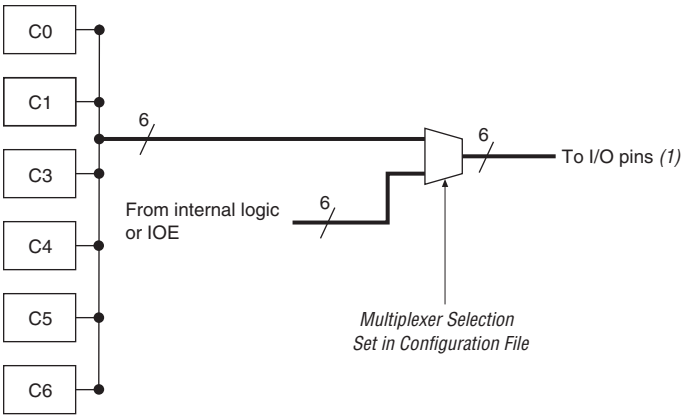

Note to Figure 1–5:

(1) The design can use each external clock output pin as a general-purpose output pin from the logic array. These pins are multiplexed with I/O element (IOE) outputs.

Each pin of a single-ended output pair can either be in phase or 180° out of phase. The Quartus II software places the NOT gate in the design into the IOE to implement 180° phase with respect to the other pin in the pair. The clock output pin pairs support the same I/O standards as standard output pins (in the top and bottom banks) as well as LVDS, LVPECL, differential HSTL, and differential SSTL. See Table 1–6, in the "Enhanced PLL Pins" section on page 1–12 to determine which I/O standards the enhanced PLL clock pins support.

When in single-ended or differential mode, one power pin supports six single-ended or three differential outputs. Both outputs use the same I/O standard in single-ended mode to maintain performance. You can also use the external clock output pins as user output pins if external enhanced PLL clocking is not needed.

The enhanced PLL can also drive out to any regular I/O pin through the global or regional clock network.

Enhanced PLL Software Overview

Stratix II and Stratix II GX enhanced PLLs are enabled in the Quartus II software by using the `altpll` megafunction. Figure 1–6 shows the available ports (as they are named in the Quartus II `altpll` megafunction) of the Stratix II and Stratix II GX enhanced PLL.

Figure 1–6. Enhanced PLL Ports

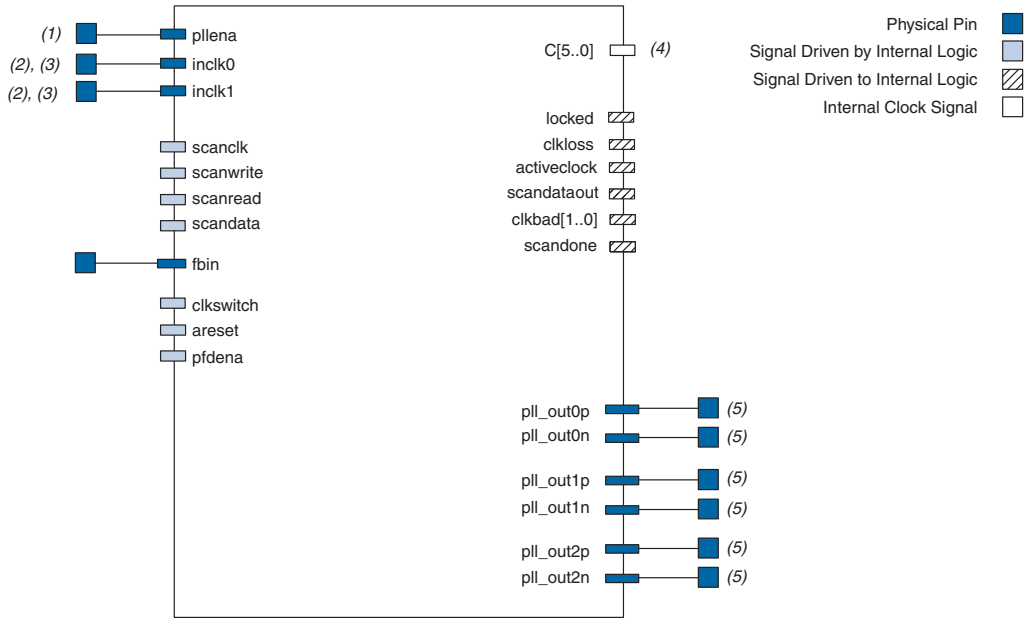

Notes to Figure 1–6:

(1) Enhanced and fast PLLs share this input pin.
(2) These are either single-ended or differential pins.
(3) The primary and secondary clock input can be fed from any one of four clock pins located on the same side of the device as the PLL.
(4) Can drive to the global or regional clock networks or the dedicated external clock output pins.
(5) These dedicated output clocks are fed by the `C[5..0]` counters.

Tables 1–4 and 1–5 describe all the enhanced PLL ports.

Table 1–4. Enhanced PLL Input Signals (Part 1 of 2)

Port	Description	Source	Destination
`inclk0`	Primary clock input to the PLL.	Pin or another PLL	*n* counter
`inclk1`	Secondary clock input to the PLL.	Pin or another PLL	*n* counter
`fbin`	External feedback input to the PLL.	Pin	PFD
`pllena`	Enable pin for enabling or disabling all or a set of PLLs. Active high.	Pin	General PLL control signal
`clkswitch`	Switch-over signal used to initiate external clock switch-over control. Active high.	Logic array	PLL switch-over circuit

Table 1–4. Enhanced PLL Input Signals (Part 2 of 2)

Port	Description	Source	Destination
areset	Signal used to reset the PLL which resynchronizes all the counter outputs. Active high.	Logic array	General PLL control signal
pfdena	Enables the outputs from the phase frequency detector. Active high.	Logic array	PFD
scanclk	Serial clock signal for the real-time PLL reconfiguration feature.	Logic array	Reconfiguration circuit
scandata	Serial input data stream for the real-time PLL reconfiguration feature.	Logic array	Reconfiguration circuit
scanwrite	Enables writing the data in the scan chain into the PLL. Active high.	Logic array	Reconfiguration circuit
scanread	Enables scan data to be written into the scan chain. Active high.	Logic array	Reconfiguration circuit

Table 1–5. Enhanced PLL Output Signals (Part 1 of 2)

Port	Description	Source	Destination
c[5..0]	PLL output counters driving regional, global or external clocks.	PLL counter	Internal or external clock
pll_out [2..0]p pll_out [2..0]n	These are three differential or six single-ended external clock output pins fed from the C[5..0] PLL counters, and every output can be driven by any counter. *p* and *n* are the positive (*p*) and negative (*n*) pins for differential pins.	PLL counter	Pin(s)
clkloss	Signal indicating the switch-over circuit detected a switch-over condition.	PLL switch-over circuit	Logic array
clkbad[1..0]	Signals indicating which reference clock is no longer toggling. clkbad1 indicates inclk1 status, clkbad0 indicates inclk0 status. 1= good; 0=bad	PLL switch-over circuit	Logic array
locked	Lock or gated lock output from lock detect circuit. Active high.	PLL lock detect	Logic array
activeclock	Signal to indicate which clock (0 = inclk0 or 1 = inclk1) is driving the PLL. If this signal is low, inclk0 drives the PLL, If this signal is high, inclk1 drives the PLL	PLL clock multiplexer	Logic array

Table 1–5. Enhanced PLL Output Signals (Part 2 of 2)			
Port	**Description**	**Source**	**Destination**
scandataout	Output of the last shift register in the scan chain.	PLL scan chain	Logic array
scandone	Signal indicating when the PLL has completed reconfiguration. 1 to 0 transition indicates that the PLL has been reconfigured.	PLL scan chain	Logic array

Enhanced PLL Pins

Table 1–6 lists the I/O standards support by the enhanced PLL clock outputs.

Table 1–6. I/O Standards Supported for Enhanced PLL Pins (Part 1 of 2) Note (1)			
I/O Standard	**Input**		**Output**
	INCLK	**FBIN**	**EXTCLK**
LVTTL	✓	✓	✓
LVCMOS	✓	✓	✓
2.5 V	✓	✓	✓
1.8 V	✓	✓	✓
1.5 V	✓	✓	✓
3.3-V PCI	✓	✓	✓
3.3-V PCI-X	✓	✓	✓
SSTL-2 Class I	✓	✓	✓
SSTL-2 Class II	✓	✓	✓
SSTL-18 Class I	✓	✓	✓
SSTL-18 Class II	✓	✓	✓
1.8-V HSTL Class I	✓	✓	✓
1.8-V HSTL Class II	✓	✓	✓
1.5-V HSTL Class I	✓	✓	✓
1.5-V HSTL Class II	✓	✓	✓
1.2-V HSTL Class I	✓	✓	✓
1.2-V HSTL Class II	✓	✓	✓

Table 1–6. I/O Standards Supported for Enhanced PLL Pins (Part 2 of 2) *Note (1)*

I/O Standard	Input		Output
	INCLK	FBIN	EXTCLK
Differential SSTL-2 Class I	✓	✓	✓
Differential SSTL-2 Class II	✓	✓	✓
Differential SSTL-18 Class I	✓	✓	✓
Differential SSTL-18 Class II	✓	✓	✓
1.8-V differential HSTL Class I	✓	✓	✓
1.8-V differential HSTL Class II	✓	✓	✓
1.5-V differential HSTL Class I	✓	✓	✓
1.5-V differential HSTL Class II	✓	✓	✓
LVDS	✓	✓	✓
HyperTransport technology			
Differential LVPECL	✓	✓	✓

Note to Table 1–6:
(1) The enhanced PLL external clock output bank does not allow a mixture of both single-ended and differential I/O standards.

Table 1–7 shows the physical pins and their purpose for the Stratix II and Stratix II GX enhanced PLLs. For `inclk` port connections to pins see "Clock Control Block" on page 1–86.

Table 1–7. Stratix II and Stratix II GX Enhanced PLL Pins (Part 1 of 3) *Note (1)*

Pin	Description
CLK4p/n	Single-ended or differential pins that can drive the `inclk` port for PLLs 6 or 12.
CLK5p/n	Single-ended or differential pins that can drive the `inclk` port for PLLs 6 or 12.
CLK6p/n	Single-ended or differential pins that can drive the `inclk` port for PLLs 6 or 12.
CLK7p/n	Single-ended or differential pins that can drive the `inclk` port for PLLs 6 or 12.
CLK12p/n	Single-ended or differential pins that can drive the `inclk` port for PLLs 5 or 11.
CLK13p/n	Single-ended or differential pins that can drive the `inclk` port for PLLs 5 or 11.
CLK14p/n	Single-ended or differential pins that can drive the `inclk` port for PLLs 5 or 11.
CLK15p/n	Single-ended or differential pins that can drive the `inclk` port for PLLs 5 or 11.
PLL5_FBp/n	Single-ended or differential pins that can drive the `fbin` port for PLL 5.

Table 1–7. Stratix II and Stratix II GX Enhanced PLL Pins (Part 2 of 3) *Note (1)*

Pin	Description
PLL6_FBp/n	Single-ended or differential pins that can drive the fbin port for PLL 6.
PLL11_FBp/n	Single-ended or differential pins that can drive the fbin port for PLL 11.
PLL12_FBp/n	Single-ended or differential pins that can drive the fbin port for PLL 12.
PLL_ENA	Dedicated input pin that drives the pllena port of all or a set of PLLs. If you do not use this pin, connect it to ground.
PLL5_OUT[2..0]p/n	Single-ended or differential pins driven by C[5..0] ports from PLL 5.
PLL6_OUT[2..0]p/n	Single-ended or differential pins driven by C[5..0] ports from PLL 6.
PLL11_OUT[2..0]p/n	Single-ended or differential pins driven by C[5..0] ports from PLL 11.
PLL12_OUT[2..0]p/n	Single-ended or differential pins driven by C[5..0] ports from PLL 12.
VCCA_PLL5	Analog power for PLL 5. You must connect this pin to 1.2 V, even if the PLL is not used.
GNDA_PLL5	Analog ground for PLL 5. You can connect this pin to the GND plane on the board.
VCCA_PLL6	Analog power for PLL 6. You must connect this pin to 1.2 V, even if the PLL is not used.
GNDA_PLL6	Analog ground for PLL 6. You can connect this pin to the GND plane on the board.
VCCA_PLL11	Analog power for PLL 11. You must connect this pin to 1.2 V, even if the PLL is not used.
GNDA_PLL11	Analog ground for PLL 11. You can connect this pin to the GND plane on the board.
VCCA_PLL12	Analog power for PLL 12. You must connect this pin to 1.2 V, even if the PLL is not used.
GNDA_PLL12	Analog ground for PLL 12. You can connect this pin to the GND plane on the board.
VCCD_PLL	Digital power for PLLs. You must connect this pin to 1.2 V, even if the PLL is not used.
VCC_PLL5_OUT	External clock output V_{CCIO} power for PLL5_OUT0p, PLL5_OUT0n, PLL5_OUT1p, PLL5_OUT1n, PLL5_OUT2p, and PLL5_OUT2n outputs from PLL 5.
VCC_PLL6_OUT	External clock output V_{CCIO} power for PLL6_OUT0p, PLL6_OUT0n, PLL6_OUT1p, PLL6_OUT1n and PLL6_OUT2p, PLL6_OUT2n outputs from PLL 6.
VCC_PLL11_OUT	External clock output V_{CCIO} power for PLL11_OUT0p, PLL11_OUT0n, PLL11_OUT1p, PLL11_OUT1n and PLL11_OUT2p, PLL11_OUT2n outputs from PLL 11.

Table 1–7. Stratix II and Stratix II GX Enhanced PLL Pins (Part 3 of 3) Note (1)	
Pin	**Description**
VCC_PLL12_OUT	External clock output V_{CCIO} power for PLL12_OUT0p, PLL12_OUT0n, PLL12_OUT1p, PLL12_OUT1n and PLL12_OUT2p, PLL12_OUT2n outputs from PLL 12.

Note to Table 1–7:
(1) The negative leg pins (CLKn, PLL_FBn, and PLL_OUTn) are only required with differential signaling.

Fast PLLs

Stratix II devices contain up to eight fast PLLs and Stratix II GX devices contain up to four fast PLLs. Fast PLLs have high-speed differential I/O interface capability along with general-purpose features.

Fast PLL Hardware Overview

Figure 1–7 shows a diagram of the fast PLL.

Figure 1–7. Stratix II and Stratix II GX Fast PLL Block Diagram

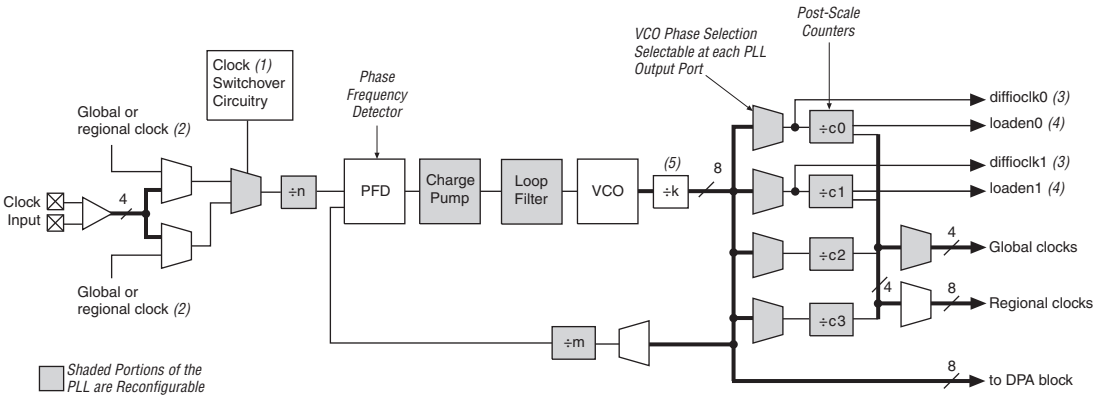

Notes to Figure 1–7:
(1) Stratix II and Stratix II GX fast PLLs only support manual clock switchover.
(2) The global or regional clock input can be driven by an output from another PLL, a pin-driven dedicated global or regional clock, or through a clock control block provided the clock control block is fed by an output from another PLL or a pin-driven dedicated global or regional clock. An internally generated global signal cannot drive the PLL.
(3) In high-speed differential I/O support mode, this high-speed PLL clock feeds the SERDES. Stratix II devices only support one rate of data transfer per fast PLL in high-speed differential I/O support mode.
(4) This signal is a high-speed differential I/O support SERDES control signal.
(5) If the design enables this ÷2 counter, then the device can use a VCO frequency range of 150 to 520 MHz.

External Clock Outputs

Each fast PLL supports differential or single-ended outputs for source-synchronous transmitters or for general-purpose external clocks. There are no dedicated external clock output pins. The fast PLL global or regional outputs can drive any I/O pin as an external clock output pin. The I/O standards supported by any particular bank determines what standards are possible for an external clock output driven by the fast PLL in that bank.

For more information, see the *Selectable I/O Standards in Stratix II and Stratix II GX Devices* chapter in volume 2 of the *Stratix II GX Device Handbook* (or the *Stratix II Device Handbook*).

Fast PLL Software Overview

Stratix II and Stratix II GX fast PLLs are enabled in the Quartus II software by using the `altpll` megafunction. Figure 1–8 shows the available ports (as they are named in the Quartus II `altpll` megafunction) of the Stratix II or Stratix II GX fast PLL.

Figure 1–8. Stratix II and Stratix II GX Fast PLL Ports and Physical Destinations

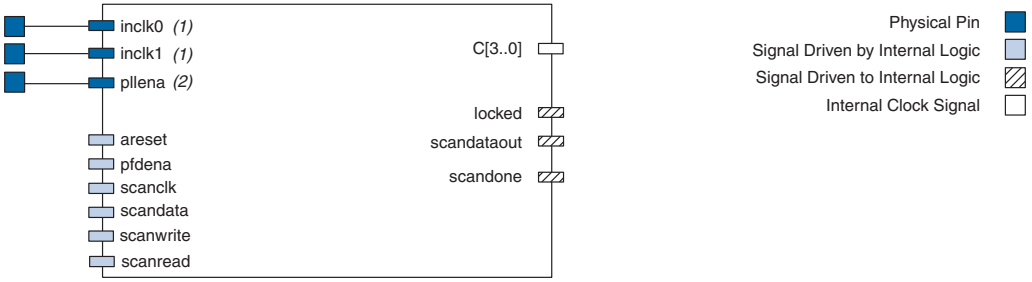

Notes to Figure 1–8:
(1) This input pin is either single-ended or differential.
(2) This input pin is shared by all enhanced and fast PLLs.

Tables 1–8 and 1–9 show the description of all fast PLL ports.

Table 1–8. Fast PLL Input Signals (Part 1 of 2)

Name	Description	Source	Destination
`inclk0`	Primary clock input to the fast PLL.	Pin or another PLL	*n* counter
`inclk1`	Secondary clock input to the fast PLL.	Pin or another PLL	*n* counter

Table 1–8. Fast PLL Input Signals (Part 2 of 2)

Name	Description	Source	Destination
pllena	Enable pin for enabling or disabling all or a set of PLLs. Active high.	Pin	PLL control signal
clkswitch	Switch-over signal used to initiate external clock switch-over control. Active high.	Logic array	Reconfiguration circuit
areset	Enables the up/down outputs from the phase-frequency detector. Active high.	Logic array	PLL control signal
pfdena	Enables the up/down outputs from the phase-frequency detector. Active high.	Logic array	PFD
scanclk	Serial clock signal for the real-time PLL control feature.	Logic array	Reconfiguration circuit
scandata	Serial input data stream for the real-time PLL control feature.	Logic array	Reconfiguration circuit
scanwrite	Enables writing the data in the scan chain into the PLL Active high.	Logic array	Reconfiguration circuit
scanread	Enables scan data to be written into the scan chain Active high.	Logic array	Reconfiguration circuit

Table 1–9. Fast PLL Output Signals

Name	Description	Source	Destination
c[3..0]	PLL outputs driving regional or global clock.	PLL counter	Internal clock
locked	Lock or gated lock output from lock detect circuit. Active high.	PLL lock detect	Logic array
scandataout	Output of the last shift register in the scan chain.	PLL scan chain	Logic array
scandone	Signal indicating when the PLL has completed reconfiguration. 1 to 0 transition indicates the PLL has been reconfigured.	PLL scan chain	Logic array

Fast PLL Pins

Table 1–10 shows the I/O standards supported by the fast PLL input pins.

Table 1–10. I/O Standards Supported for Stratix II and Stratix II GX Fast PLL Pins

I/O Standard	INCLK
LVTTL	✓
LVCMOS	✓
2.5 V	✓
1.8 V	✓
1.5 V	✓
3.3-V PCI	
3.3-V PCI-X	
SSTL-2 Class I	✓
SSTL-2 Class II	✓
SSTL-18 Class I	✓
SSTL-18 Class II	✓
1.8-V HSTL Class I	✓
1.8-V HSTL Class II	✓
1.5-V HSTL Class I	✓
1.5-V HSTL Class II	✓
Differential SSTL-2 Class I	
Differential SSTL-2 Class II	
Differential SSTL-18 Class I	
Differential SSTL-18 Class II	
1.8-V differential HSTL Class I	
1.8-V differential HSTL Class II	
1.5-V differential HSTL Class I	
1.5-V differential HSTL Class II	
LVDS	✓
HyperTransport technology	✓
Differential LVPECL	

Table 1–11 shows the physical pins and their purpose for the fast PLLs. For inclk port connections to pins, see "Clocking" on page 1–62.

Table 1–11. Fast PLL Pins (Part 1 of 2) *Note (1)*

Pin	Description
CLK0p/n	Single-ended or differential pins that can drive the inclk port for PLLs 1, 2, 7 or 8.
CLK1p/n	Single-ended or differential pins that can drive the inclk port for PLLs 1, 2, 7 or 8.
CLK2p/n	Single-ended or differential pins that can drive the inclk port for PLLs 1, 2, 7 or 8.
CLK3p/n	Single-ended or differential pins that can drive the inclk port for PLLs 1, 2, 7 or 8.
CLK8p/n	Single-ended or differential pins that can drive the inclk port for PLLs 3, 4, 9 or 10.
CLK9p/n	Single-ended or differential pins that can drive the inclk port for PLLs 3, 4, 9 or 10.
CLK10p/n	Single-ended or differential pins that can drive the inclk port for PLLs 3, 4, 9 or 10.
CLK11p/n	Single-ended or differential pins that can drive the inclk port for PLLs 3, 4, 9 or 10.
FPLL7CLKp/n	Single-ended or differential pins that can drive the inclk port for PLL 7.
FPLL8CLKp/n	Single-ended or differential pins that can drive the inclk port for PLL 8.
FPLL9CLKp/n	Single-ended or differential pins that can drive the inclk port for PLL 9.
FPLL10CLKp/n	Single-ended or differential pins that can drive the inclk port for PLL 10.
PLL_ENA	Dedicated input pin that drives the pllena port of all or a set of PLLs. If you do not use this pin, connect it to GND.
VCCD_PLL	Digital power for PLLs. You must connect this pin to 1.2 V, even if the PLL is not used.
VCCA_PLL1	Analog power for PLL 1. You must connect this pin to 1.2 V, even if the PLL is not used.
GNDA_PLL1	Analog ground for PLL 1. Your can connect this pin to the GND plane on the board.
VCCA_PLL2	Analog power for PLL 2. You must connect this pin to 1.2 V, even if the PLL is not used.
GNDA_PLL2	Analog ground for PLL 2. You can connect this pin to the GND plane on the board.
VCCA_PLL3	Analog power for PLL 3. You must connect this pin to 1.2 V, even if the PLL is not used.
GNDA_PLL3	Analog ground for PLL 3. You can connect this pin to the GND plane on the board.
VCCA_PLL4	Analog power for PLL 4. You must connect this pin to 1.2 V, even if the PLL is not used.
GNDA_PLL4	Analog ground for PLL 4. You can connect this pin to the GND plane on the board.
GNDA_PLL7	Analog ground for PLL 7. You can connect this pin to the GND plane on the board.
VCCA_PLL8	Analog power for PLL 8. You must connect this pin to 1.2 V, even if the PLL is not used.
GNDA_PLL8	Analog ground for PLL 8. You can connect this pin to the GND plane on the board.
VCCA_PLL9	Analog power for PLL 9. You must connect this pin to 1.2 V, even if the PLL is not used.
GNDA_PLL9	Analog ground for PLL 9. You can connect this pin to the GND plane on the board.
VCCA_PLL10	Analog power for PLL 10. You must connect this pin to 1.2 V, even if the PLL is not used.

Table 1–11. Fast PLL Pins (Part 2 of 2) Note (1)	
Pin	**Description**
GNDA_PLL10	Analog ground for PLL 10. You can connect this pin to the GND plane on the board.

Note to Table 1–11:
(1) The negative leg pins (CLKn and FPLL_CLKn) are only required with differential signaling.

Clock Feedback Modes

Stratix II and Stratix II GX PLLs support up to five different clock feedback modes. Each mode allows clock multiplication and division, phase shifting, and programmable duty cycle. Each PLL must be driven by one of its own dedicated clock input pins for proper clock compensation. The clock input pin connections for each PLL are listed in Table 1–20 on page 1–70.

Table 1–12 shows which modes are supported by which PLL type.

Table 1–12. Clock Feedback Mode Availability		
Clock Feedback Mode	**Mode Available in**	
	Enhanced PLLs	**Fast PLLs**
Source synchronous mode	Yes	Yes
No compensation mode	Yes	Yes
Normal mode	Yes	Yes
Zero delay buffer mode	Yes	No
External feedback mode	Yes	No

Source-Synchronous Mode

If data and clock arrive at the same time at the input pins, they are guaranteed to keep the same phase relationship at the clock and data ports of any IOE input register. Figure 1–9 shows an example waveform of the clock and data in this mode. This mode is recommended for source-synchronous data transfers. Data and clock signals at the IOE experience similar buffer delays as long as the same I/O standard is used.

Figure 1–9. Phase Relationship Between Clock and Data in Source-Synchronous Mode

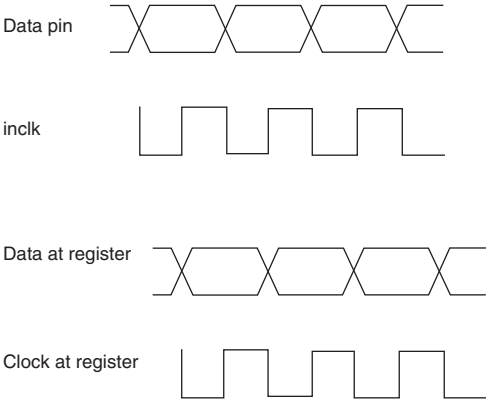

In source-synchronous mode, enhanced PLLs compensate for clock delay to the top and bottom IO registers and fast PLLs compensate for clock delay to the side IO registers. While implementing source-synchronous receivers in these IO banks, use the corresponding PLL type for best matching between clock and data delays (from input pins to register ports).



Set the input pin to the register delay chain within the IOE to zero in the Quartus II software for all data pins clocked by a source-synchronous mode PLL.

No Compensation Mode

In this mode, the PLL does not compensate for any clock networks. This provides better jitter performance because the clock feedback into the PFD does not pass through as much circuitry. Both the PLL internal and external clock outputs are phase shifted with respect to the PLL clock input. Figure 1–10 shows an example waveform of the PLL clocks' phase relationship in this mode.

Figure 1–10. Phase Relationship between PLL Clocks in No Compensation Mode

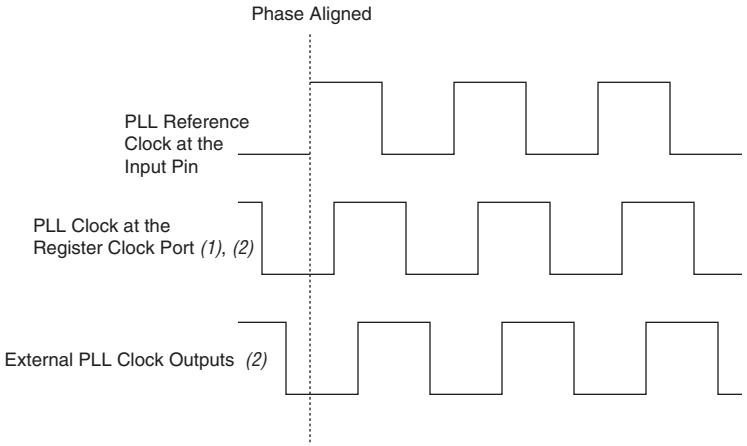

Notes to Figure 1–10.
(1) Internal clocks fed by the PLL are phase-aligned to each other.
(2) The PLL clock outputs can lead or lag the PLL input clocks.

Normal Mode

An internal clock in normal mode is phase-aligned to the input clock pin. The external clock output pin will have a phase delay relative to the clock input pin if connected in this mode. In normal mode, the delay introduced by the GCLK or RCLK network is fully compensated. Figure 1–11 shows an example waveform of the PLL clocks' phase relationship in this mode.

Figure 1–11. Phase Relationship Between PLL Clocks in Normal Mode

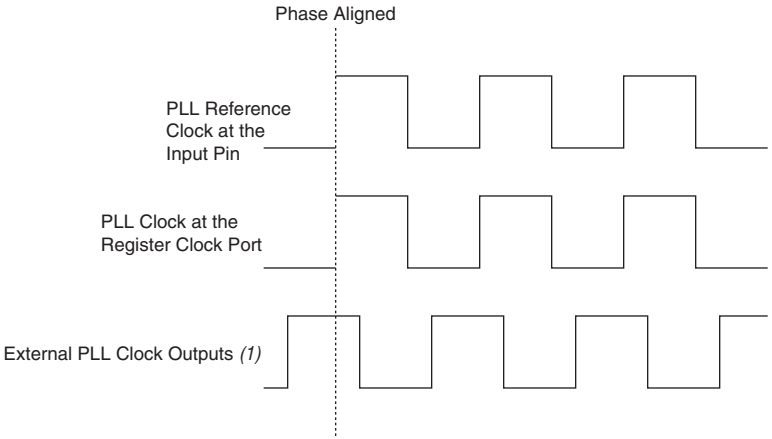

Note to Figure 1–11:
(1) The external clock output can lead or lag the PLL internal clock signals.

Zero Delay Buffer Mode

In the zero delay buffer mode, the external clock output pin is phase-aligned with the clock input pin for zero delay through the device. Figure 1–12 shows an example waveform of the PLL clocks' phase relationship in this mode. When using this mode, Altera requires that you use the same I/O standard on the input clock, and output clocks. When using single-ended I/O standards, the `inclk` port of the PLL must be fed by the dedicated `CLKp` input pin.

Figure 1–12. Phase Relationship Between PLL Clocks in Zero Delay Buffer Mode

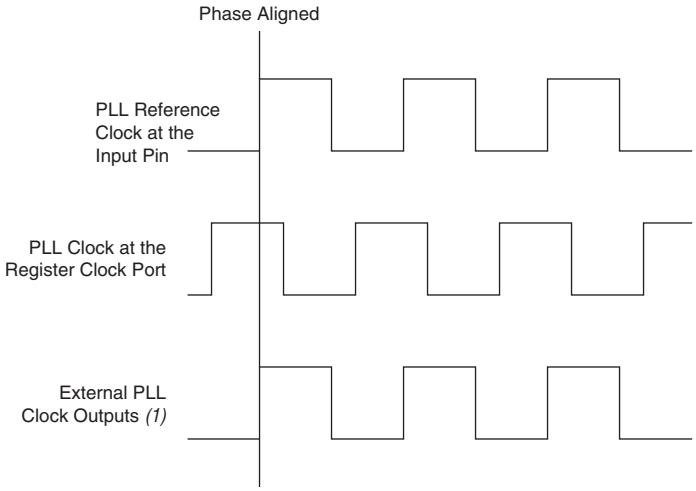

Note to Figure 1–12:
(1) The internal PLL clock output can lead or lag the external PLL clock outputs.

External Feedback Mode

In the external feedback mode, the external feedback input pin, `fbin`, is phase-aligned with the clock input pin, (see Figure 1–13). Aligning these clocks allows you to remove clock delay and skew between devices. This mode is possible on all enhanced PLLs. PLLs 5, 6, 11, and 12 support feedback for one of the dedicated external outputs, either one single-ended or one differential pair. In this mode, one *C* counter feeds back to the PLL `fbin` input, becoming part of the feedback loop. In this mode, you will be using one of the dedicated external clock outputs (two if a differential I/O standard is used) as the PLL `fbin` input pin. When using this mode, Altera requires that you use the same I/O standard on the input clock, feedback input, and output clocks. When using single-ended I/O standards, the `inclk` port of the PLL must be fed by the dedicated `CLKp` input pin.

Figure 1–13. Phase Relationship Between PLL Clocks in External Feedback Mode

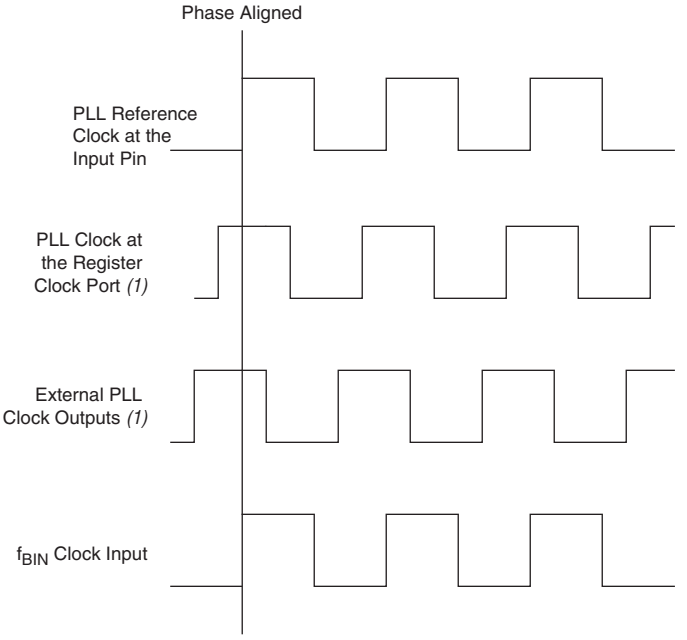

Note to Figure 1–13:
(1) The PLL clock outputs can lead or lag the f_{BIN} clock input.

Hardware Features

Stratix II and Stratix II GX PLLs support a number of features for general-purpose clock management. This section discusses clock multiplication and division implementation, phase-shifting implementations and programmable duty cycles. Table 1–13 shows which feature is available in which type of Stratix II or Stratix II GX PLL.

Table 1–13. Stratix II and Stratix II GX PLL Hardware Features (Part 1 of 2)

Hardware Features	Availability	
	Enhanced PLL	Fast PLL
Clock multiplication and division	*m* (*n* × post-scale counter)	*m* (*n* × post-scale counter)
m counter value	Ranges from 1 through 512	Ranges from 1 through 32
n counter value	Ranges from 1 through 512	Ranges from 1 through 4
Post-scale counter values	Ranges from 1 through 512 *(1)*	Ranges from 1 through 32 *(2)*

Table 1–13. Stratix II and Stratix II GX PLL Hardware Features (Part 2 of 2)		
Hardware Features	Availability	
	Enhanced PLL	Fast PLL
Phase shift	Down to 125-ps increments *(3)*	Down to 125-ps increments *(3)*
Programmable duty cycle	Yes	Yes

Notes to Table 1–13:

(1) Post-scale counters range from 1 through 512 if the output clock uses a 50% duty cycle. For any output clocks using a non-50% duty cycle, the post-scale counters range from 1 through 256.

(2) Post-scale counters range from 1 through 32 if the output clock uses a 50% duty cycle. For any output clocks using a non-50% duty cycle, the post-scale counters range from 1 through 16.

(3) The smallest phase shift is determined by the VCO period divided by 8. For degree increments, the Stratix II device can shift all output frequencies in increments of at least 45°. Smaller degree increments are possible depending on the frequency and divide parameters.

Clock Multiplication and Division

Each Stratix II PLL provides clock synthesis for PLL output ports using $m/(n \times$ post-scale counter) scaling factors. The input clock is divided by a pre-scale factor, n, and is then multiplied by the m feedback factor. The control loop drives the VCO to match f_{IN} (m/n). Each output port has a unique post-scale counter that divides down the high-frequency VCO. For multiple PLL outputs with different frequencies, the VCO is set to the least common multiple of the output frequencies that meets its frequency specifications. For example, if output frequencies required from one PLL are 33 and 66 MHz, then the Quartus II software sets the VCO to 660 MHz (the least common multiple of 33 and 66 MHz within the VCO range). Then, the post-scale counters scale down the VCO frequency for each output port.

There is one pre-scale counter, n, and one multiply counter, m, per PLL, with a range of 1 to 512 for both m and n in enhanced PLLs. For fast PLLs, m ranges from 1 to 32 while n ranges from 1 to 4. There are six generic post-scale counters in enhanced PLLs that can feed regional clocks, global clocks, or external clock outputs, all ranging from 1 to 512 with a 50% duty cycle setting for each PLL. The post-scale counters range from 1 to 256 with any non-50% duty cycle setting. In fast PLLs, there are four post-scale counters (`C0`, `C1`, `C2`, `C3`) for the regional and global clock output ports. All post-scale counters range from 1 to 32 with a 50% duty cycle setting. For non-50% duty cycle clock outputs, the post-scale counters range from 1 to 16. If the design uses a high-speed I/O interface, you can connect the dedicated `dffioclk` clock output port to allow the high-speed VCO frequency to drive the serializer/deserializer (SERDES).

The Quartus II software automatically chooses the appropriate scaling factors according to the input frequency, multiplication, and division values entered into the `altpll` megafunction.

Phase-Shift Implementation

Phase shift is used to implement a robust solution for clock delays in Stratix II and Stratix II GX devices. Phase shift is implemented by using a combination of the VCO phase output and the counter starting time. The VCO phase output and counter starting time is the most accurate method of inserting delays, since it is purely based on counter settings, which are independent of process, voltage, and temperature.



Stratix II and Stratix II GX PLLs do not support programmable delay elements because these delay elements require considerable area on the die and are sensitive to process, voltage, and temperature.

You can phase shift the output clocks from the Stratix II or Stratix II GX enhanced PLL in either:

- Fine resolution using VCO phase taps
- Coarse resolution using counter starting time

The VCO phase tap and counter starting time is implemented by allowing any of the output counters (`C[5..0]` or `m`) to use any of the eight phases of the VCO as the reference clock. This allows you to adjust the delay time with a fine resolution. The minimum delay time that you can insert using this method is defined by:

$$\Phi_{fine} = \frac{1}{8} T_{VCO} = \frac{1}{8 f_{VCO}} = \frac{N}{8 M f_{REF}}$$

where f_{REF} is input reference clock frequency.

For example, if f_{REF} is 100 MHz, *n* is 1, and *m* is 8, then f_{VCO} is 800 MHz and Φ_{fINE} equals 156.25 ps. This phase shift is defined by the PLL operating frequency, which is governed by the reference clock frequency and the counter settings.

You can also delay the start of the counters for a predetermined number of counter clocks. You can express phase shift as:

$$\Phi_{coarse} = \frac{C - 1}{f_{Vco}} = \frac{(C - 1)N}{M f_{REF}}$$

where *C* is the count value set for the counter delay time, (this is the initial setting in the PLL usage section of the compilation report in the Quartus II software). If the initial value is 1, C – 1 = 0° phase shift.

Figure 1–14 shows an example of phase shift insertion using the fine resolution using VCO phase taps method. The eight phases from the VCO are shown and labeled for reference. For this example, `CLK0` is based off the 0phase from the VCO and has the *C* value for the counter set to one. The `CLK1` signal is divided by four, two VCO clocks for high time and two VCO clocks for low time. `CLK1` is based off the 135° phase tap from the VCO and also has the *C* value for the counter set to one. The `CLK1` signal is also divided by 4. In this case, the two clocks are offset by 3 Φ_{FINE}. `CLK2` is based off the `0phase` from the VCO but has the *C* value for the counter set to three. This creates a delay of 2 Φ_{COARSE}, (two complete VCO periods).

Figure 1–14. Delay Insertion Using VCO Phase Output and Counter Delay Time

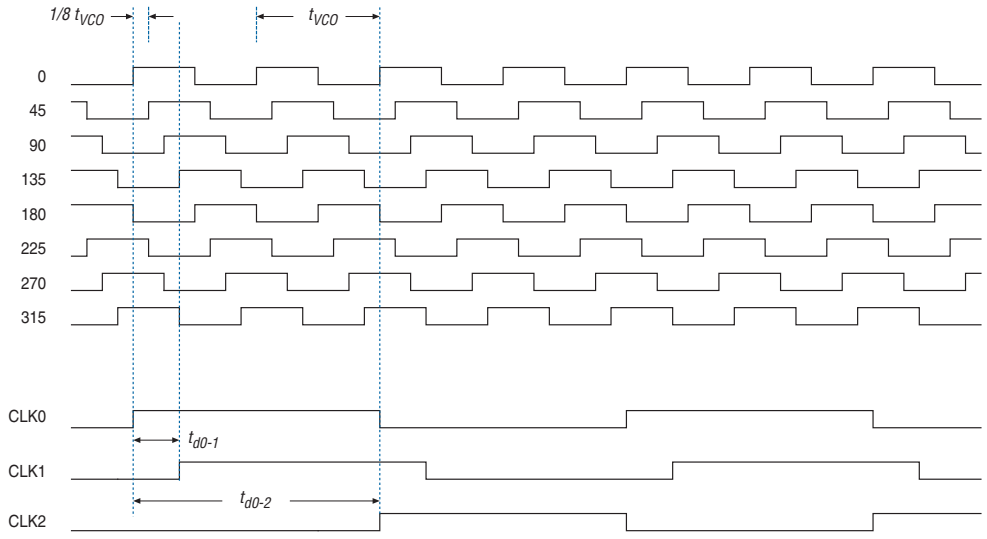

You can use the coarse and fine phase shifts as described above to implement clock delays in Stratix II and Stratix II GX devices. The phase-shift parameters are set in the Quartus II software.

Programmable Duty Cycle

The programmable duty cycle allows enhanced and fast PLLs to generate clock outputs with a variable duty cycle. This feature is supported on each enhanced and fast PLL post-scale counter `C[]`. The duty cycle setting is achieved by a low and high time count setting for the post-scale counters. The Quartus II software uses the frequency input and the required multiply or divide rate to determine the duty cycle choices. The post-scale counter value determines the precision of the duty cycle. The precision is defined by 50% divided by the post-scale counter value. The closest value to 100% is not achievable for a given counter value. For example, if the `C0` counter is ten, then steps of 5% are possible for duty cycle choices between 5 to 90%.

If the device uses external feedback, you must set the duty cycle for the counter driving the `fbin` pin to 50%. Combining the programmable duty cycle with programmable phase shift allows the generation of precise non-overlapping clocks.

Advanced Clear and Enable Control

There are several control signals for clearing and enabling PLLs and their outputs. You can use these signals to control PLL resynchronization and gate PLL output clocks for low-power applications.

Enhanced Lock Detect Circuit

The lock output indicates that the PLL has locked onto the reference clock. Without any additional circuitry, the lock signal may toggle as the PLL begins tracking the reference clock. You may need to gate the lock signal for use as a system control. Either a gated lock signal or an ungated lock signal from the locked port can drive the logic array or an output pin. The Stratix II and Stratix II GX enhanced and fast PLLs include a programmable counter that holds the lock signal low for a user-selected number of input clock transitions. This allows the PLL to lock before enabling the lock signal. You can use the Quartus II software to set the 20-bit counter value.

Figure 1–15 shows the timing waveform for the lock and gated lock signals.

Figure 1–15. Timing Waveform for Lock and Gated Lock Signals

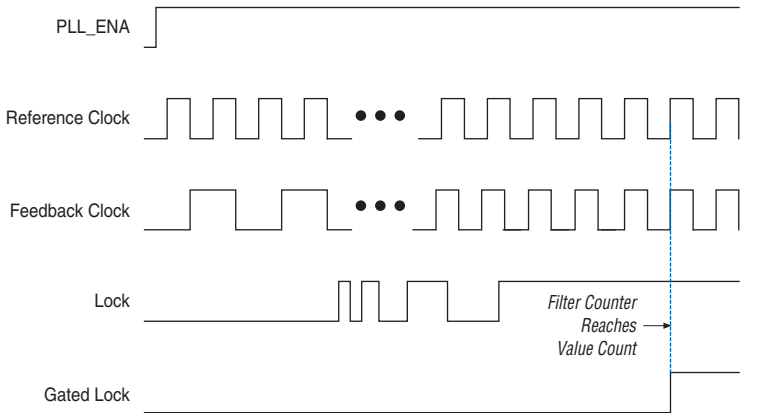

The device resets and enables both the counter and the PLL simultaneously when the `pllena` signal is asserted or the `areset` signal is de-asserted. Enhanced PLLs and fast PLLs support this feature. To ensure correct circuit operation, and to ensure that the output clocks have the correct phase relationship with respect to the input clock, Altera recommends that the input clock be running before the Stratix II device is finished configuring.

PLL_ENA

The PLL_ENA pin is a dedicated pin that enables or disables all PLLs on the Stratix II or Stratix II GX device. When the PLL_ENA pin is low, the clock output ports are driven low and all the PLLs go out of lock. When the PLL_ENA pin goes high again, the PLLs relock and resynchronize to the input clocks. You can choose which PLLs are controlled by the `pllena` signal by connecting the `pllena` input port of the `altpll` megafunction to the common PLL_ENA input pin.

Also, whenever the PLL loses lock for any reason (be it excessive `inclk` jitter, clock switchover, PLL reconfiguration, power supply noise, etc.), the PLL must be reset with the `areset` signal to guarantee correct phase relationship between the PLL output clocks. If the phase relationship between the input clock versus output clock, and between different output clocks from the PLL is not important in your design, the PLL need not be reset.

The level of the VCCSEL pin selects the PLL_ENA input buffer power. Therefore, if VCCSEL is high, the PLL_ENA pin's 1.8/1.5-V input buffer is powered by V_{CCIO} of the bank that PLL_ENA resides in. If VCCSEL is low (GND), the PLL_ENA pin's 3.3/2.5-V input buffer is powered by V_{CCPD}.

For more information about the VCCSEL pin, refer to the *Configuring Stratix II and Stratix II GX Devices* chapter in volume 2 of the *Stratix II GX Device Handbook* (or the *Stratix II Device Handbook)*.

pfdena

The pfdena signals control the phase frequency detector (PFD) output with a programmable gate. If you disable the PFD, the VCO operates at its last set value of control voltage and frequency with some long-term drift to a lower frequency. The system continues running when the PLL goes out of lock or the input clock is disabled. By maintaining the last locked frequency, the system has time to store its current settings before shutting down. You can either use your own control signal or clkloss or gated locked status signals, to trigger pfdena.

areset

The areset signal is the reset or resynchronization input for each PLL. The device input pins or internal logic can drive these input signals. When driven high, the PLL counters reset, clearing the PLL output and placing the PLL out of lock. The VCO is set back to its nominal setting (~700 MHz). When driven low again, the PLL will resynchronize to its input as it relocks. If the target VCO frequency is below this nominal frequency, then the output frequency starts at a higher value than desired as the PLL locks.

The areset signal should be asserted every time the PLL loses lock to guarantee correct phase relationship between the PLL input clock and output clocks. Users should include the areset signal in designs if any of the following conditions are true:

- PLL reconfiguration or clock switchover enabled in the design.
- Phase relationships between the PLL input clock and output clocks need to be maintained after a loss of lock condition.
- If the input clock to the PLL is not toggling or is unstable upon power up, assert the areset signal after the input clock is toggling, making sure to stay within the input jitter specification.

Altera recommends that you use the areset and locked signals in your designs to control and observe the status of your PLL.

clkena

If the system cannot tolerate the higher output frequencies when using pfdena higher value, the clkena signals can disable the output clocks until the PLL locks. The clkena signals control the regional, global, and external clock outputs. The clkena signals are registered on the falling edge of the counter output clock to enable or disable the clock without glitches. See Figure 1–56 in the "Clock Control Block" section on page 1–86 of this document for more information about the clkena signals.

Advanced Features

Stratix II and Stratix II GX PLLs offer a variety of advanced features, such as counter cascading, clock switchover, PLL reconfiguration, reconfigurable bandwidth, and spread-spectrum clocking. Table 1–14 shows which advanced features are available in which type of Stratix II or Stratix II GX PLL.

Table 1–14. Stratix II and Stratix II GX PLL Advanced Features

Advanced Feature	Availability	
	Enhanced PLLs	Fast PLLs *(1)*
Counter cascading	✓	
Clock switchover	✓	✓
PLL reconfiguration	✓	✓
Reconfigurable bandwidth	✓	✓
Spread-spectrum clocking	✓	

Note to Table 1–14:
(1) Stratix II and Stratix II GX fast PLLs only support manual clock switchover, not automatic clock switchover.

Counter Cascading

The Stratix II and Stratix II GX enhanced PLL supports counter cascading to create post-scale counters larger than 512. This is implemented by feeding the output of one counter into the input of the next counter in a cascade chain, as shown in Figure 1–16.

Figure 1–16. Counter Cascading

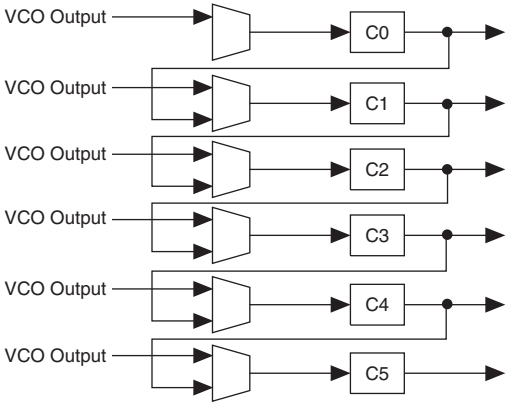

When cascading counters to implement a larger division of the high-frequency VCO clock, the cascaded counters behave as one counter with the product of the individual counter settings. For example, if C0 = 4 and C1 = 2, then the cascaded value is C0 × C1 = 8.

The Stratix II and Stratix II GX fast PLLs does not support counter cascading.

Counter cascading is set in the configuration file, meaning they can not be cascaded using PLL reconfiguration.

Clock Switchover

The clock switchover feature allows the PLL to switch between two reference input clocks. Use this feature for clock redundancy or for a dual clock domain application such as in a system that turns on the redundant clock if the primary clock stops running. The design can perform clock switchover automatically, when the clock is no longer toggling, or based on a user control signal, `clkswitch`.

Enhanced PLLs support both automatic and manual switchover, while fast PLLs only support manual switchover.

Automatic Clock Switchover

Stratix II and Stratix II GX device PLLs support a fully configurable clock switchover capability. Figure 1–17 shows the block diagram of the switch-over circuit built into the enhanced PLL. When the primary clock signal is not present, the clock sense block automatically switches from

the primary to the secondary clock for PLL reference. The design sends out the clk0_bad, clk1_bad, and the clk_loss signals from the PLL to implement a custom switchover circuit.

Figure 1–17. Automatic Clock Switchover Circuit Block Diagram

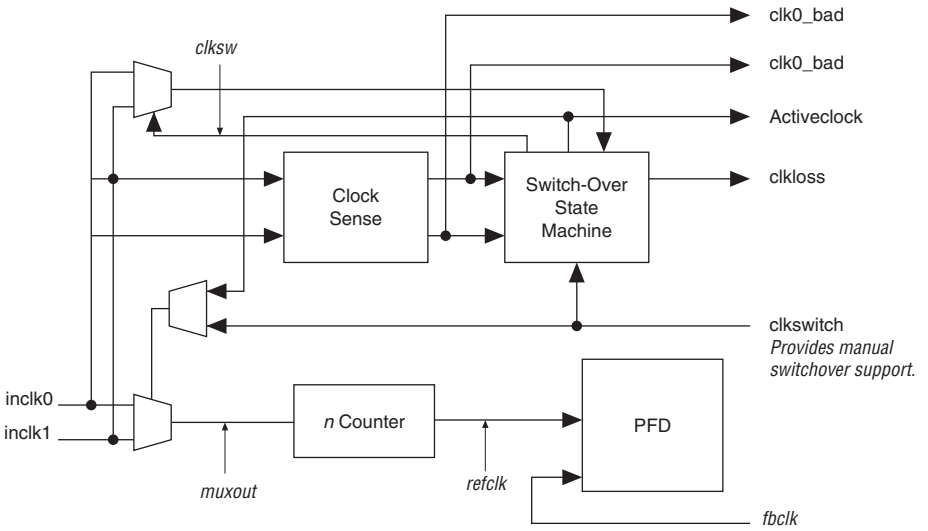

There are two possible ways to use the clock switchover feature.

- Use the switchover circuitry for switching from a primary to secondary input of the same frequency. For example, in applications that require a redundant clock with the same frequency as the primary clock, the switchover state machine generates a signal that controls the multiplexer select input shown on the bottom of Figure 1–17. In this case, the secondary clock becomes the reference clock for the PLL. This automatic switchover feature only works for switching from the primary to secondary clock.

- Use the CLKSWITCH input for user- or system-controlled switch conditions. This is possible for same-frequency switchover or to switch between inputs of different frequencies. For example, if inclk0 is 66 MHz and inclk1 is 100 MHz, you must control the switchover because the automatic clock-sense circuitry cannot monitor primary and secondary clock frequencies with a frequency difference of more than 20%. This feature is useful when clock sources can originate from multiple cards on the backplane, requiring a system-controlled switchover between frequencies of operation. You should choose the secondary clock frequency so the

VCO operates within the recommended range of 500 to 1,000 MHz. You should also set the *m* and *n* counters accordingly to keep the VCO operating frequency in the recommended range.

Figure 1–18 shows an example waveform of the switchover feature when using the automatic `clkloss` detection. Here, the `inclk0` signal gets stuck low. After the `inclk0` signal is stuck at low for approximately two clock cycles, the clock sense circuitry drives the `clk0_bad` signal high. Also, because the reference clock signal is not toggling, the `clk_loss` signal goes low, indicating a switch condition. Then, the switchover state machine controls the multiplexer through the `clksw` signal to switch to the secondary clock.

Figure 1–18. Automatic Switchover Upon Clock Loss Detection

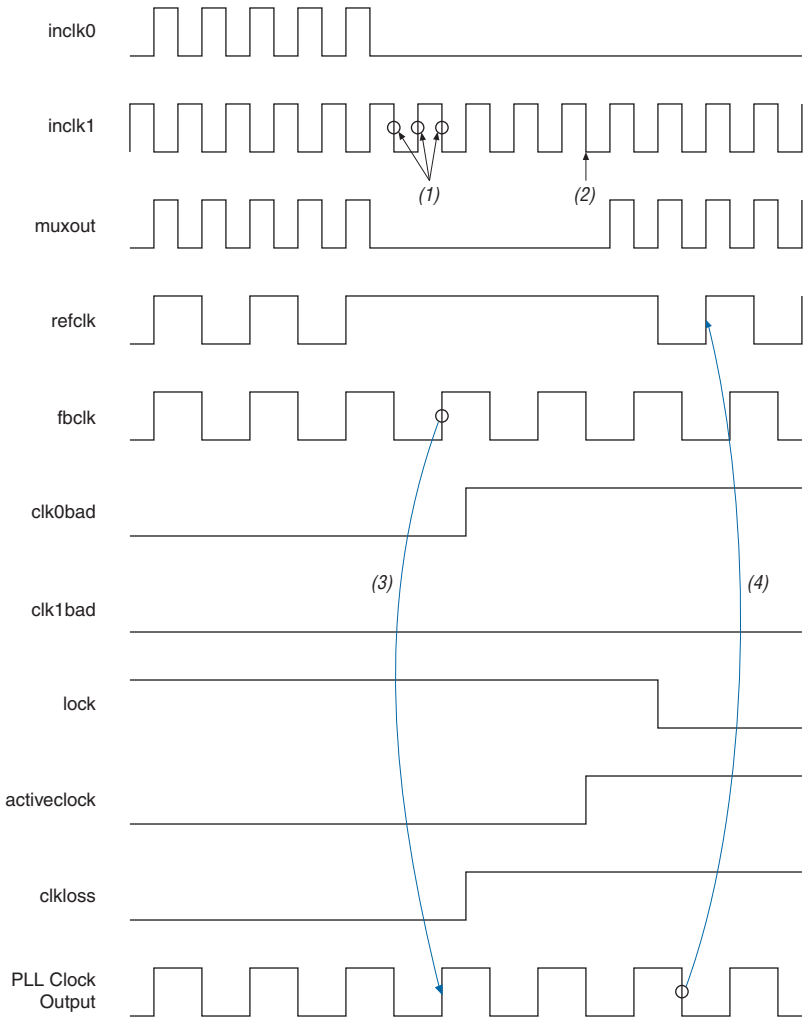

Notes to Figure 1–18:

(1) The number of clock edges before allowing switchover is determined by the counter setting.
(2) Switchover is enabled on the falling edge of INCLK1.
(3) The rising edge of FBCLK causes the VCO frequency to decrease.
(4) The rising edge of REFCLK starts the PLL lock process again, and the VCO frequency increases.

The switch-over state machine has two counters that count the edges of the primary and the secondary clocks; counter0 counts the number of inclk0 edges and counter1 counts the number of inclk1 edges. The counters get reset to zero when the count values reach 1, 1; 1, 2; 2, 1; or 2, 2 for inclock0 and inclock1, respectively. For example, if counter0 counts two edges, its count is set to two and if counter1 counts two edges before the counter0 sees another edge, they are both reset to 0. If for some reason one of the counters counts to three, it means the other clock missed an edge. The clkbad0 or clkbad1 signal goes high, and the switchover circuitry signals a switch condition. See Figure 1–19.

Figure 1–19. Clock-Edge Detection for Switchover

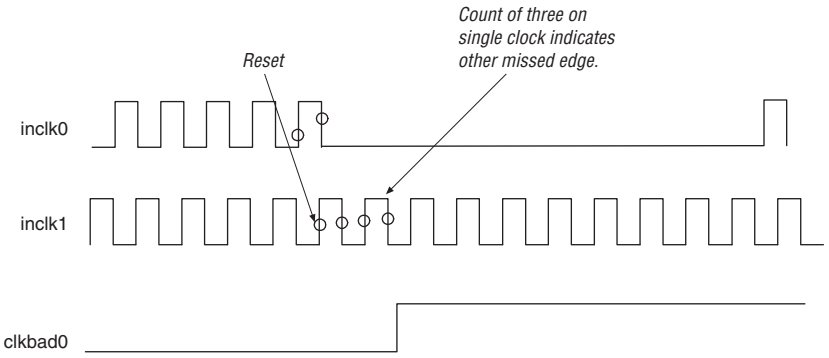

Manual Override

When using automatic switchover, you can switch input clocks by using the manual override feature with the clkswitch input.



The manual override feature available in automatic clock switchover is different from manual clock switchover.

Figure 1–20 shows an example of a waveform illustrating the switchover feature when controlled by clkswitch. In this case, both clock sources are functional and inclk0 is selected as the primary clock. clkswitch goes high, which starts the switchover sequence. On the falling edge of inclk0, the counter's reference clock, muxout, is gated off to prevent any clock glitching. On the falling edge of inclk1, the reference clock multiplexer switches from inclk0 to inclk1 as the PLL reference and the activeclock signal changes to indicate which clock is selected as primary and which is secondary.

The clkloss signal mirrors the clkswitch signal and activeclock mirrors clksw in this mode. Since both clocks are still functional during the manual switch, neither clk_bad signal goes high. Since the

switchover circuit is edge-sensitive, the falling edge of the clkswitch signal does not cause the circuit to switch back from inclk1 to inclk0. When the clkswitch signal goes high again, the process repeats. clkswitch and automatic switch only work if the clock being switched to is available. If the clock is not available, the state machine waits until the clock is available.

Figure 1–20. Clock Switchover Using the CLKSWITCH Control *Note (1)*

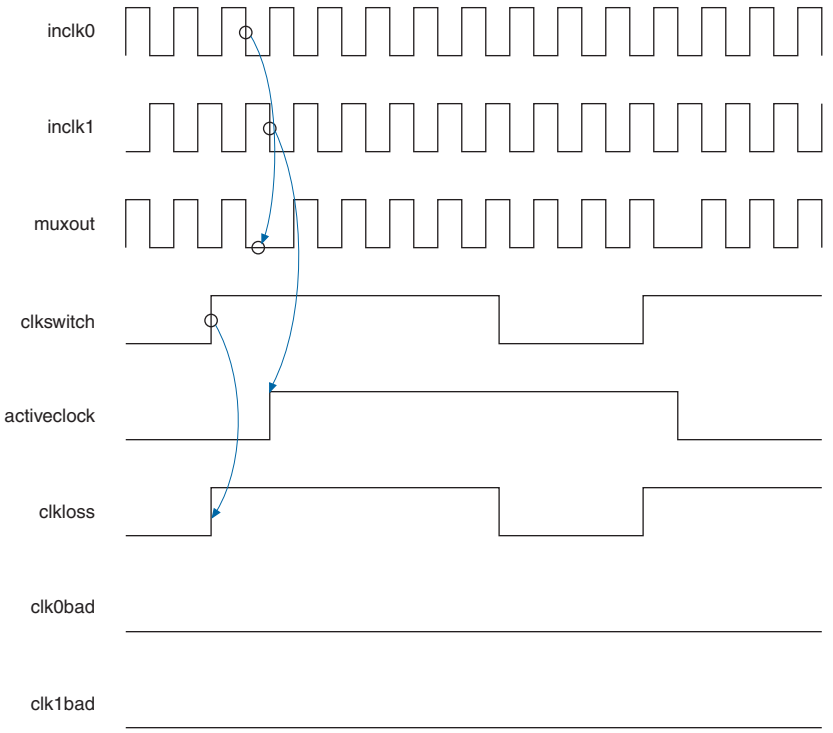

Note to Figure 1–20:

(1) Both inclk0 and inclk1 must be running when the clkswitch signal goes high to initiate a manual clock switchover event. Failing to meet this requirement causes the clock switchover to not function properly.

Figure 1–21 shows a simulation of using switchover for two different reference frequencies. In this example simulation, the reference clock is either 100 or 66 MHz. The PLL begins with f_{IN} = 100 MHz and is allowed to lock. At 20 µs, the clock is switched to the secondary clock, which is at 66 MHz.

Figure 1–21. Switchover Simulation *Note (1)*

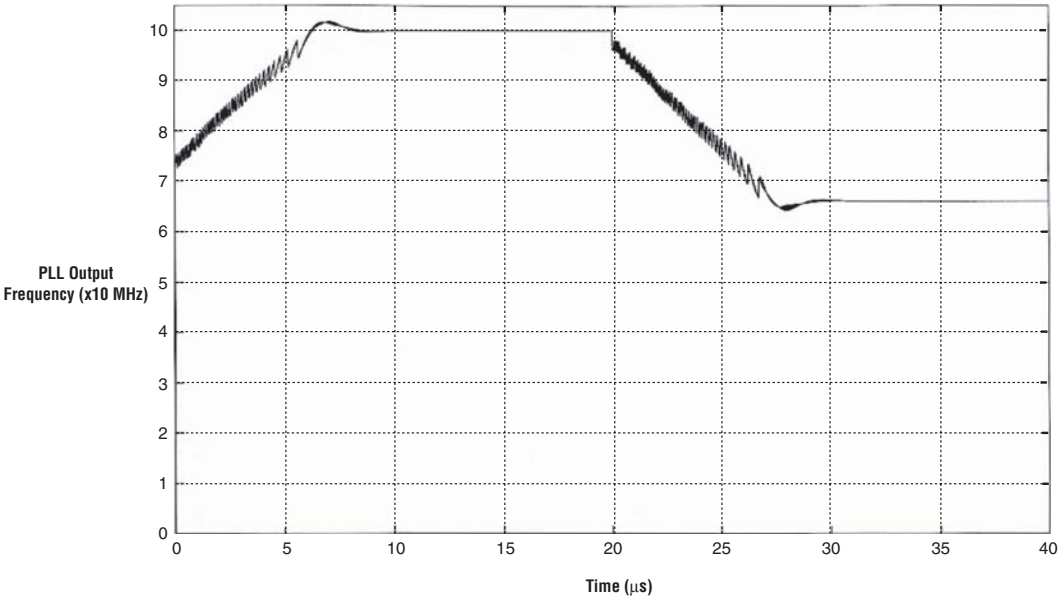

Note to Figure 1–21:

(1) This simulation was performed under the following conditions: the *n* counter is set to 2, the *m* counter is set to 16, and the output counter is set to 8. Therefore, the VCO operates at 800 MHz for the 100-MHz input references and at 528 MHz for the 66-MHz reference input.

Lock Signal-Based Switchover

The lock circuitry can initiate the automatic switchover. This is useful for cases where the input clock is still clocking, but its characteristics have changed so that the PLL is not locked to it. The switchover enable is based on both the gated and ungated lock signals. If the ungated lock is low, the switchover is not enabled until the gated lock has reached its terminal count. You must activate the switchover enable if the gated lock is high, but the ungated lock goes low. The switchover timing for this mode is similar to the waveform shown in Figure 1–20 for `clkswitch` control, except the switchover enable replaces `clkswitch`. Figure 1–17 shows the switchover enable circuit when controlled by lock and gated lock.

Figure 1–22. Switchover Enable Circuit

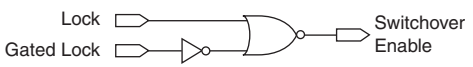

Manual Clock Switchover

Stratix II and Stratix II GX enhanced and fast PLLs support manual switchover, where the `clkswitch` signal controls whether `inclk0` or `inclk1` is the input clock to the PLL. If `clkswitch` is low, then `inclk0` is selected; if `clkswitch` is high, then `inclk1` is selected. Figure 1–23 shows the block diagram of the manual switchover circuit in fast PLLs. The block diagram of the manual switchover circuit in enhanced PLLs is shown in Figure 1–23.

Figure 1–23. Manual Clock Switchover Circuitry in Fast PLLs

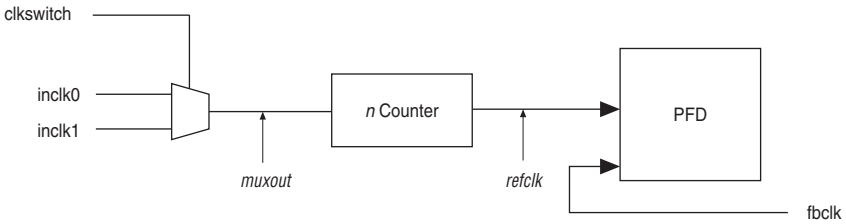

Figure 1–24 shows an example of a waveform illustrating the switchover feature when controlled by `clkswitch`. In this case, both clock sources are functional and `inclk0` is selected as the primary clock. `clkswitch` goes high, which starts the switch-over sequence. On the falling edge of `inclk0`, the counter's reference clock, `muxout`, is gated off to prevent any clock glitching. On the rising edge of `inclk1`, the reference clock multiplex switches from `inclk0` to `inclk1` as the PLL reference. When the `clkswitch` signal goes low, the process repeats, causing the circuit to switch back from `inclk1` to `inclk0`.

Figure 1–24. Manual Switchover *Note (1)*

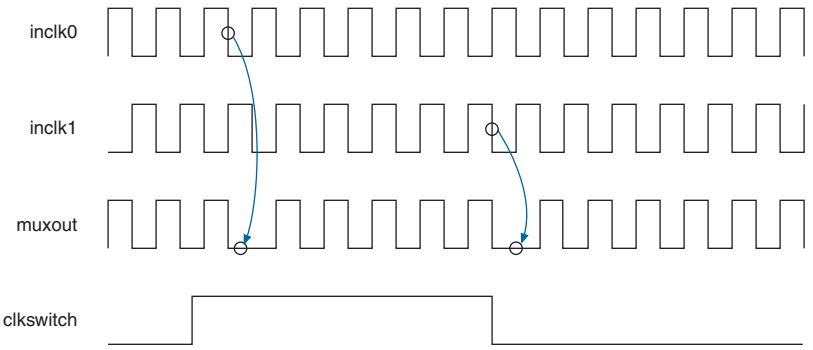

Note to Figure 1–24:

(1) Both `inclk0` and `inclk1` must be running when the `clkswitch` signal goes high to initiate a manual clock switchover event. Failing to meet this requirement causes the clock switchover to not function properly.

Software Support

Table 1–15 summarizes the signals used for clock switchover.

Table 1–15. altpll Megafunction Clock Switchover Signals (Part 1 of 2)

Port	Description	Source	Destination
inclk0	Reference `clk0` to the PLL.	I/O pin	Clock switchover circuit
inclk1	Reference `clk1` to the PLL.	I/O pin	Clock switchover circuit
clkbad0 *(1)*	Signal indicating that `inclk0` is no longer toggling.	Clock switchover circuit	Logic array
clkbad1 *(1)*	Signal indicating that `inclk1` is no longer toggling.	Clock switchover circuit	Logic array
clkswitch	Switchover signal used to initiate clock switchover asynchronously. When used in manual switchover, clkswitch is used as a select signal between inclk0 and inclk1 `clswitch = 0 inclk0` is selected and vice versa.	Logic array or I/O pin	Clock switchover circuit
clkloss *(1)*	Signal indicating that the switchover circuit detected a switch condition.	Clock switchover circuit	Logic array
locked	Signal indicating that the PLL has lost lock.	PLL	Clock switchover circuit

Table 1–15. altpll Megafunction Clock Switchover Signals (Part 2 of 2)

Port	Description	Source	Destination
activeclock *(1)*	Signal to indicate which clock (0 = `inclk0`, 1= `inclk1`) is driving the PLL.	PLL	Logic array

Note for Table 1–15:
(1) These ports are only available for enhanced PLLs and in auto mode and when using automatic switchover.

All the switchover ports shown in Table 1–15 are supported in the `altpll` megafunction in the Quartus II software. The `altpll` megafunction supports two methods for clock switchover:

- When selecting an enhanced PLL, you can enable both the automatic and the manual switchover, making all the clock switchover ports available.
- When selecting a fast PLL, you can use only enable the manual clock switchover option to select between `inclk0` or `inclk1`. The `clkloss`, `activeclock` and the `clkbad0`, and `clkbad1` signals are not available when manual switchover is selected.

If the primary and secondary clock frequencies are different, the Quartus II software selects the proper parameters to keep the VCO within the recommended frequency range.

For more information about PLL software support in the Quartus II software, see the *altpll Megafunction User Guide*.

Guidelines

Use the following guidelines to design with clock switchover in PLLs.

- When using automatic switchover, the `clkswitch` signal has a minimum pulse width based on the two reference clock periods. The `CLKSWITCH` pulse width must be greater than or equal to the period of the current reference clock (t_{from_clk}) multiplied by two plus the rounded-up version of the ratio of the two reference clock periods. For example, if t_{to_clk} is equal to t_{from_clk}, then the `CLKSWITCH` pulse width should be at least three times the period of the clock pulse.

$$t_{CLKSWITCHCHmin} \geq t_{from_clk} \times [2 + int_{round_up} (t_{to_clk} \div t_{from_clk})]$$

- Applications that require a clock switchover feature and a small frequency drift should use a low-bandwidth PLL. The low-bandwidth PLL reacts slower than a high-bandwidth PLL to reference input clock changes. When the switchover happens, a low-bandwidth PLL propagates the stopping of the clock to the output slower than a high-bandwidth PLL. A low-bandwidth PLL filters out jitter on the reference clock. However, be aware that the low-bandwidth PLL also increases lock time.
- Stratix II and Stratix II GX device PLLs can use both the automatic clock switchover and the `clkswitch` input simultaneously. Therefore, the switchover circuitry can automatically switch from the primary to the secondary clock. Once the primary clock stabilizes again, the `clkswitch` signal can switch back to the primary clock. During switchover, the `PLL_VCO` continues to run and slows down, generating frequency drift on the PLL outputs. The `clkswitch` signal controls switchover with its rising edge only.
- If the clock switchover event is glitch-free, after the switch occurs, there is still a finite resynchronization period to lock onto a new clock as the VCO ramps up. The exact amount of time it takes for the PLL to relock is dependent on the PLL configuration. Use the PLL programmable bandwidth feature to adjust the relock time.
- If the phase relationship between the input clock to the PLL and output clock from the PLL is important in your design, assert `areset` for 10ns after performing a clock switchover. Wait for the locked signal (or gated lock) to go high before re-enabling the output clocks from the PLL.
- Figure 1–25 shows how the VCO frequency gradually decreases when the primary clock is lost and then increases as the VCO locks on to the secondary clock. After the VCO locks on to the secondary clock, some overshoot can occur (an over-frequency condition) in the VCO frequency.

Figure 1–25. VCO Switchover Operating Frequency

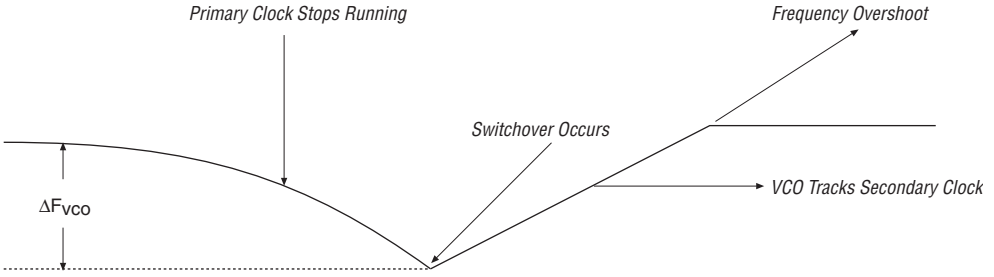

- Disable the system during switchover if it is not tolerant to frequency variations during the PLL resynchronization period. There are two ways to disable the system. First, the system may require some time to stop before switchover occurs. The switchover circuitry includes an optional five-bit counter to delay when the reference clock is switched. You have the option to control the time-out setting on this counter (up to 32 cycles of latency) before the clock source switches. You can use these cycles for disaster recovery. The clock output frequency varies slightly during those 32 cycles since the VCO can still drift without an input clock. Programmable bandwidth can control the PLL response to limit drift during this 32 cycle period.
- A second option available is the ability to use the PFD enable signal (`pfdena`) along with user-defined control logic. In this case you can use `clk0_bad` and `clk1_bad` status signals to turn off the PFD so the VCO maintains its last frequency. You can also use the state machine to switch over to the secondary clock. Upon re-enabling the PFD, output clock enable signals (`clkena`) can disable clock outputs during the switchover and resynchronization period. Once the lock indication is stable, the system can re-enable the output clock(s).

Reconfigurable Bandwidth

Stratix II and Stratix II GX enhanced and fast PLLs provide advanced control of the PLL bandwidth using the PLL loop's programmable characteristics, including loop filter and charge pump.

Background

PLL bandwidth is the measure of the PLL's ability to track the input clock and jitter. The closed-loop gain 3-dB frequency in the PLL determines the PLL bandwidth. The bandwidth is approximately the unity gain point for open loop PLL response. As Figure 1–26 shows, these points correspond to approximately the same frequency.

Figure 1–26. Open- and Closed-Loop Response Bode Plots

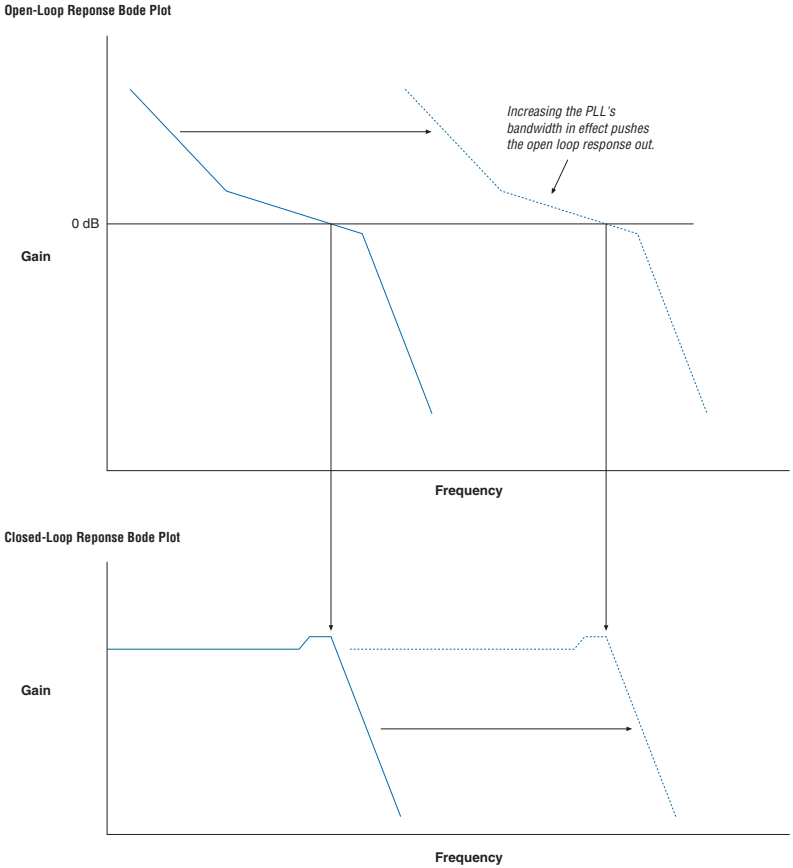

A high-bandwidth PLL provides a fast lock time and tracks jitter on the reference clock source, passing it through to the PLL output. A low-bandwidth PLL filters out reference clock, but increases lock time. Stratix II and Stratix II GX enhanced and fast PLLs allow you to control the bandwidth over a finite range to customize the PLL characteristics for a particular application. The programmable bandwidth feature in Stratix II and Stratix II GX PLLs benefits applications requiring clock switchover (e.g., TDMA frequency hopping wireless, and redundant clocking).

The bandwidth and stability of such a system is determined by the charge pump current, the loop filter resistor value, the high-frequency capacitor value (in the loop filter), and the *m*-counter value. You can use the Quartus II software to control these factors and to set the bandwidth to the desired value within a given range.

You can set the bandwidth to the appropriate value to balance the need for jitter filtering and lock time. Figures 1–27 and 1–28 show the output of a low- and high-bandwidth PLL, respectively, as it locks onto the input clock.

Figure 1–27. Low-Bandwidth PLL Lock Time

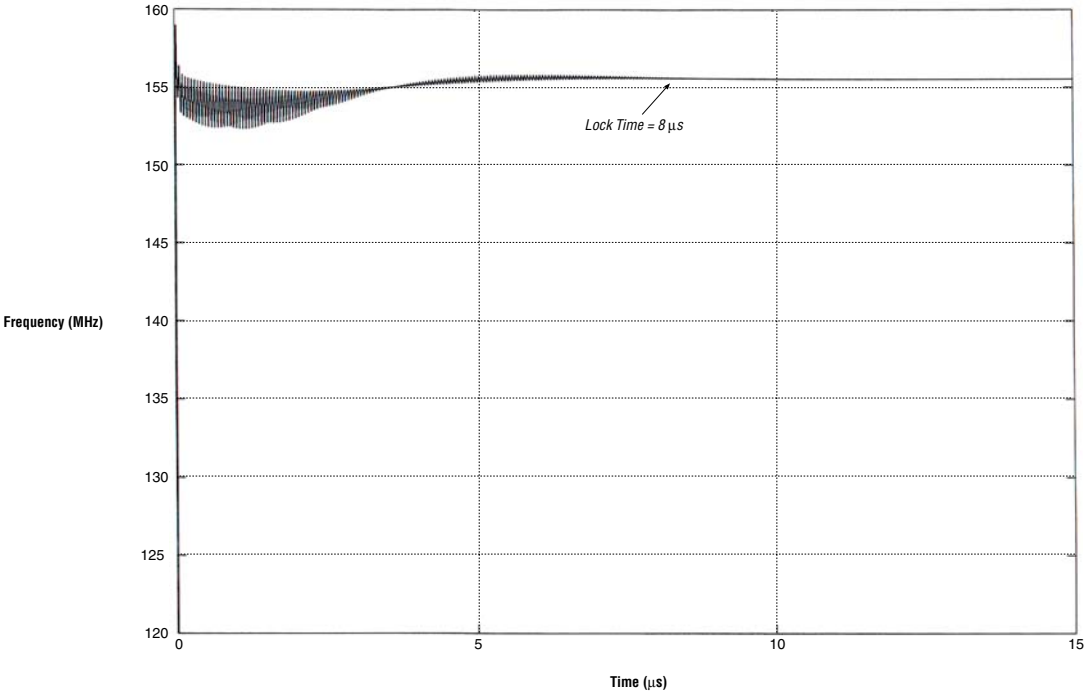

Figure 1–28. High-Bandwidth PLL Lock Time

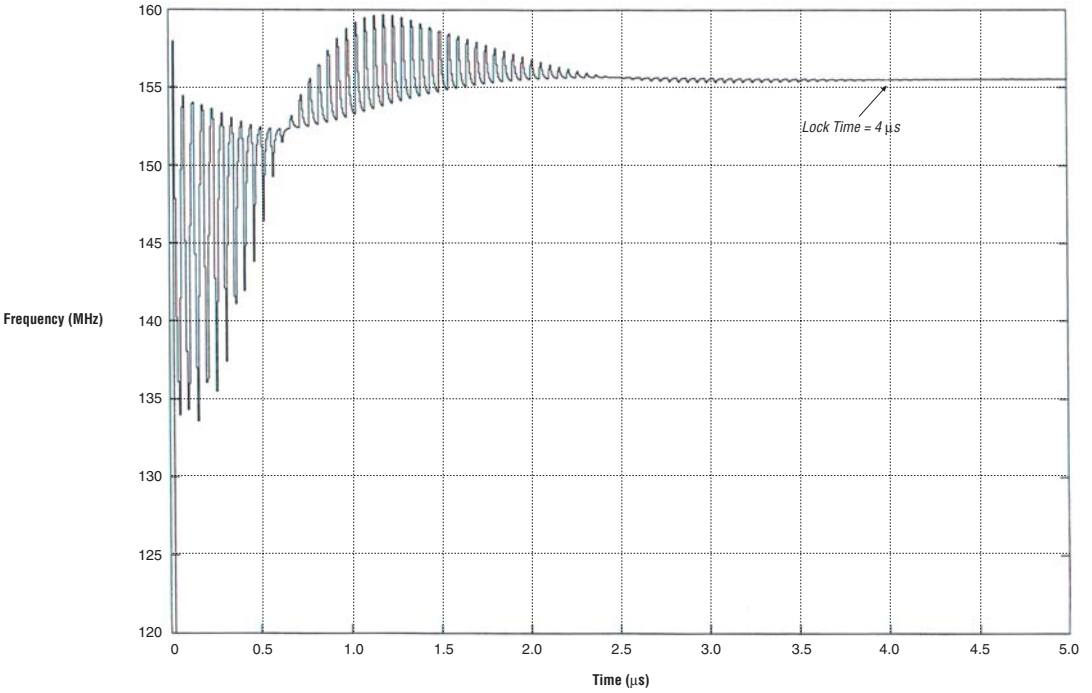

A high-bandwidth PLL can benefit a system that has two cascaded PLLs. If the first PLL uses spread spectrum (as user-induced jitter), the second PLL can track the jitter that is feeding it by using a high-bandwidth setting. A low-bandwidth PLL can, in this case, lose lock due to the spread-spectrum-induced jitter on the input clock.

A low-bandwidth PLL benefits a system using clock switchover. When the clock switchover happens, the PLL input temporarily stops. A low-bandwidth PLL would react more slowly to changes to its input clock and take longer to drift to a lower frequency (caused by the input stopping) than a high-bandwidth PLL. Figures 1–29 and 1–30 demonstrate this property. The two plots show the effects of clock switchover with a low- or high-bandwidth PLL. When the clock switchover happens, the output of the low-bandwidth PLL (see Figure 1–29) drifts to a lower frequency more slowly than the high-bandwidth PLL output (see Figure 1–30).

Figure 1–29. Effect of Low Bandwidth on Clock Switchover

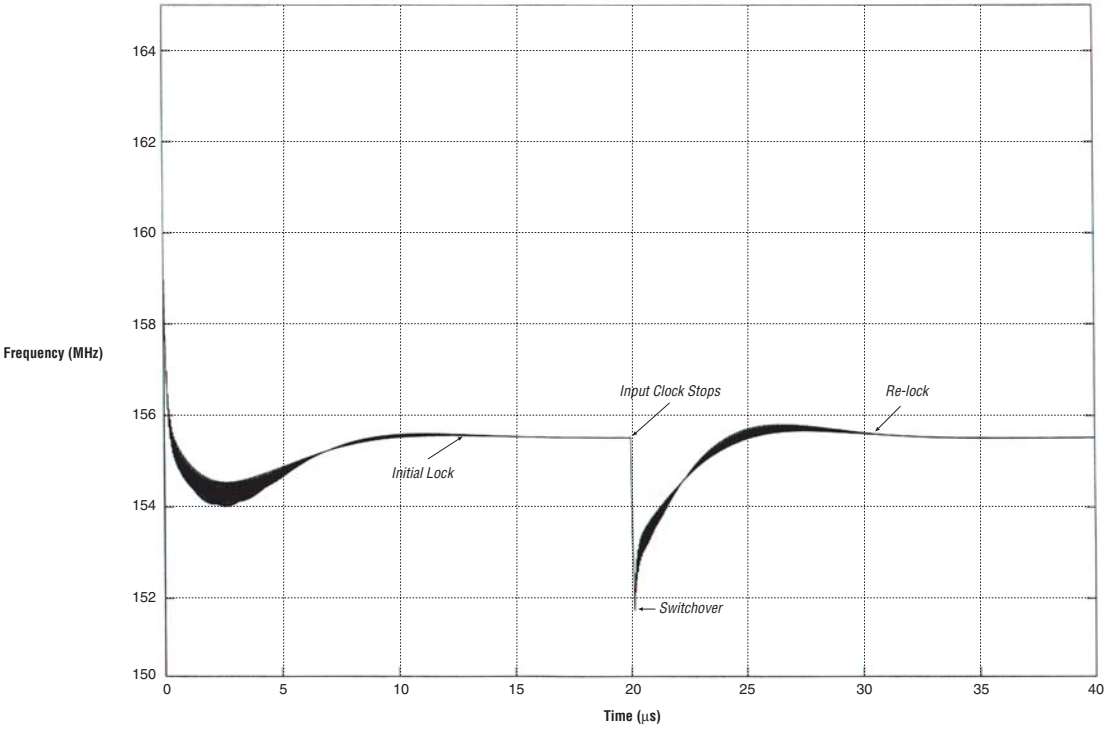

Figure 1–30. Effect of High Bandwidth on Clock Switchover

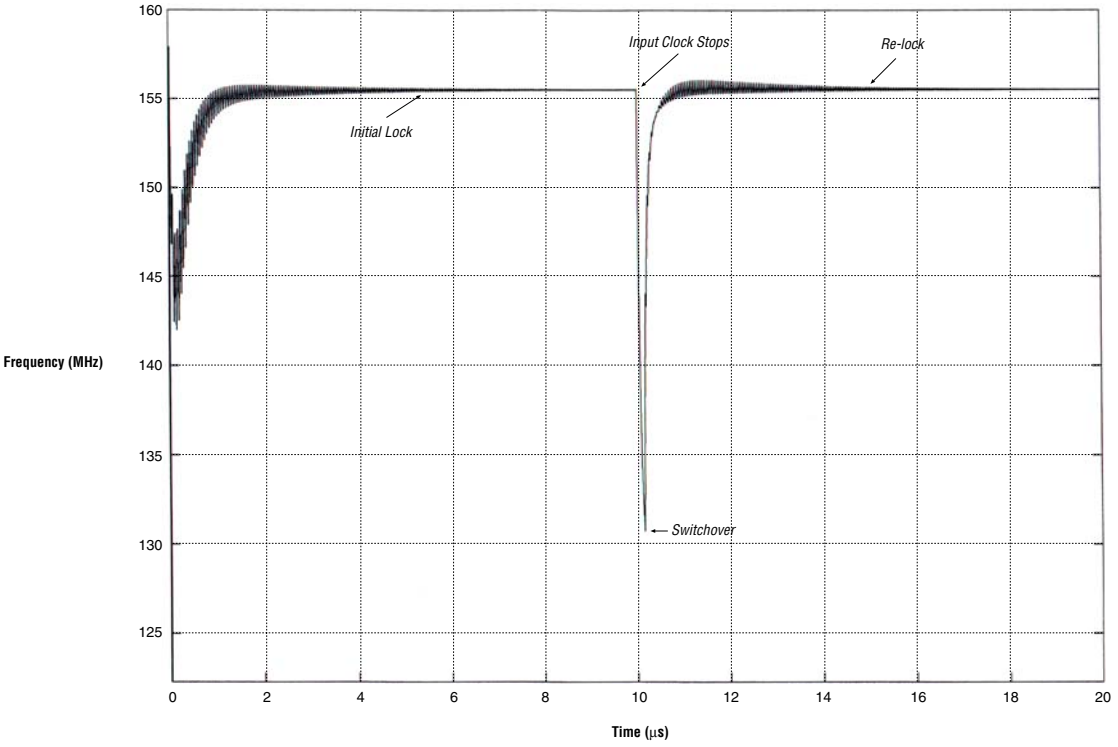

Implementation

Traditionally, external components such as the VCO or loop filter control a PLL's bandwidth. Most loop filters are made up of passive components such as resistors and capacitors that take up unnecessary board space and increase cost. With Stratix II and Stratix II GX PLLs, all the components are contained within the device to increase performance and decrease cost.

Stratix II and Stratix II GX device PLLs implement reconfigurable bandwidth by giving you control of the charge pump current and loop filter resistor (R) and high-frequency capacitor C_H values (see Table 1–16). The Stratix II and Stratix II GX device enhanced PLL bandwidth ranges from 130 kHz to 16.9 MHz. The Stratix II and Stratix II GX device fast PLL bandwidth ranges from 1.16 to 28 MHz.

The charge pump current directly affects the PLL bandwidth. The higher the charge pump current, the higher the PLL bandwidth. You can choose from a fixed set of values for the charge pump current. Figure 1–31 shows the loop filter and the components that can be set through the Quartus II software. The components are the loop filter resistor, R, and the high frequency capacitor, C_H, and the charge pump current, I_{UP} or I_{DN}.

Figure 1–31. Loop Filter Programmable Components

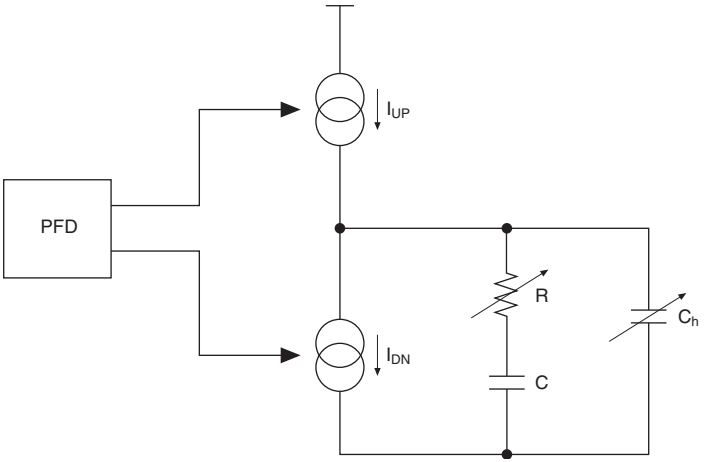

Software Support

The Quartus II software provides two levels of bandwidth control.

Megafunction-Based Bandwidth Setting

The first level of programmable bandwidth allows you to enter a value for the desired bandwidth directly into the Quartus II software using the `altpll` megafunction. You can also set the bandwidth parameter in the `altpll` megafunction to the desired bandwidth. The Quartus II software selects the best bandwidth parameters available to match your bandwidth request. If the individual bandwidth setting request is not available, the Quartus II software selects the closest achievable value.

Advanced Bandwidth Setting

An advanced level of control is also possible using advanced loop filter parameters. You can dynamically change the charge pump current, loop filter resistor value, and the loop filter (high frequency) capacitor value.

The parameters for these changes are: `charge_pump_current`, `loop_filter_r`, and `loop_filter_c`. Each parameter supports the specific range of values listed in Table 1–16.

Table 1–16. Advanced Loop Filter Parameters

Parameter	Values
Resistor values (kΩ)	*(1)*
High-frequency capacitance values (pF)	*(1)*
Charge pump current settings (µA)	*(1)*

Note to Table 1–16:
(1) For more information, see *AN 367: Implementing PLL Reconfiguration in Stratix II Devices*.

For more information about Quartus II software support of reconfigurable bandwidth, see the *Design Example: Dynamic PLL Reconfiguration* section in volume 3, Verification, of the *Quartus II Development Software Handbook*.

PLL Reconfiguration

PLLs use several divide counters and different VCO phase taps to perform frequency synthesis and phase shifts. In Stratix II and Stratix II GX enhanced and fast PLLs, the counter value and phase are configurable in real time. In addition, you can change the loop filter and charge pump components, which affect the PLL bandwidth, on the fly. You can control these PLL components to update the output clock frequency, PLL bandwidth, and phase-shift variation in real time, without the need to reconfigure the entire FPGA.

For more information about PLL reconfiguration, see *AN 367: Implementing PLL Reconfiguration in Stratix II Devices*.

Spread-Spectrum Clocking

Digital clocks are square waves with short rise times and a 50% duty cycle. These high-speed clocks concentrate a significant amount of energy in a narrow bandwidth at the target frequency and at the higher frequency harmonics. This results in high energy peaks and increased electromagnetic interference (EMI). The radiated noise from the energy peaks travels in free air and, if not minimized, can lead to corrupted data and intermittent system errors, which can jeopardize system reliability.

Traditional methods for limiting EMI include shielding, filtering, and multi-layer printed circuit boards (PCBs). However, these methods significantly increase the overall system cost and sometimes are not

enough to meet EMI compliance. Spread-spectrum technology provides you with a simple and effective technique for reducing EMI without additional cost and the trouble of re-designing a board.

Spread-spectrum technology modulates the target frequency over a small range. For example, if a 100-MHz signal has a 0.5% down-spread modulation, then the frequency is swept from 99.5 to 100 MHz. Figure 1–32 gives a graphical representation of the energy present in a spread-spectrum signal vs. a non-spread spectrum-signal. It is apparent that instead of concentrating the energy at the target frequency, the energy is re-distributed across a wider band of frequencies, which reduces peak energy. Not only is there a reduction in the fundamental peak EMI components, but there is also a reduction in EMI of the higher order harmonics. Since some regulations focus on peak EMI emissions, rather than average EMI emissions, spread-spectrum technology is a valuable method of EMI reduction.

Figure 1–32. Spread-Spectrum Signal Energy Versus Non-Spread-Spectrum Signal Energy

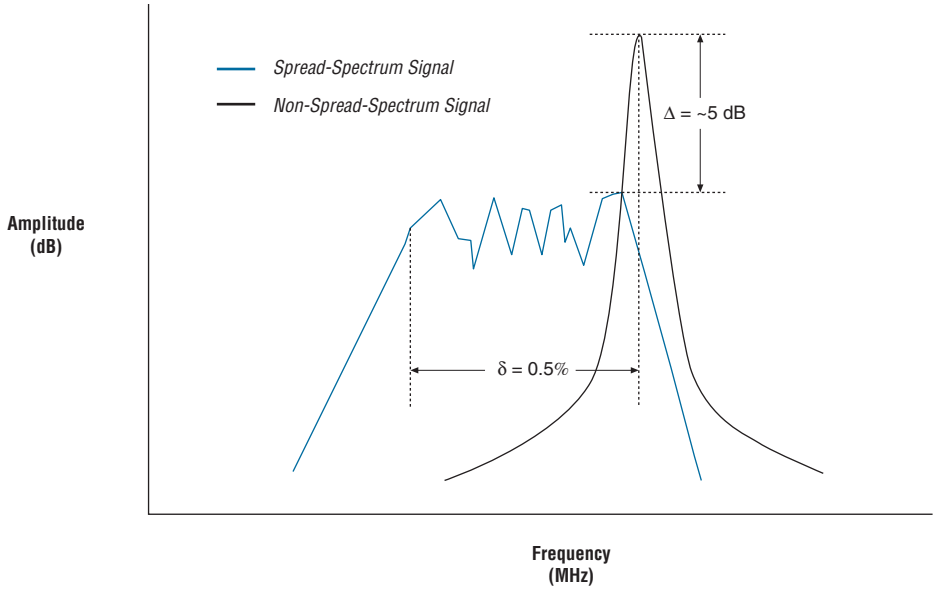

Spread-spectrum technology would benefit a design with high EMI emissions and/or strict EMI requirements. Device-generated EMI is dependent on frequency and output voltage swing amplitude and edge rate. For example, a design using LVDS already has low EMI emissions

because of the low-voltage swing. The differential LVDS signal also allows for EMI rejection within the signal. Therefore, this situation may not require spread-spectrum technology.



Spread-spectrum clocking is only supported in Stratix II enhanced PLLs, not fast PLLs.

Implementation

Stratix II and Stratix II GX device enhanced PLLs feature spread-spectrum technology to reduce the EMIs emitted from the device. The enhanced PLL provides approximately 0.5% down spread using a triangular, also known as linear, modulation profile. The modulation frequency is programmable and ranges from approximately 30 kHz to 150 kHz. The spread percentage is based on the clock input to the PLL and the *m* and *n* settings. Spread-spectrum technology reduces the peak energy by four to six dB at the target frequency. However, this number is dependent on bandwidth and the *m* and *n* counter values and can vary from design to design.

Spread percentage, also known as modulation width, is defined as the percentage that the design modulates the target frequency. A negative (–) percentage indicates a down spread, a positive (+) percentage indicates an up spread, and a (±) indicates a center spread. Modulation frequency is the frequency of the spreading signal, or how fast the signal sweeps from the minimum to the maximum frequency. Down-spread modulation shifts the target frequency down by half the spread percentage, centering the modulated waveforms on a new target frequency.

The *m* and *n* counter values are toggled at the same time between two fixed values. The loop filter then slowly changes the VCO frequency to provide the spreading effect, which results in a triangular modulation. An additional spread-spectrum counter (shown in Figure 1–33) sets the modulation frequency. Figure 1–33 shows how spread-spectrum technology is implemented in the Stratix II and Stratix II GX device enhanced PLL.

Figure 1–33. Stratix II and Stratix II GX Spread-Spectrum Circuit Block Diagram

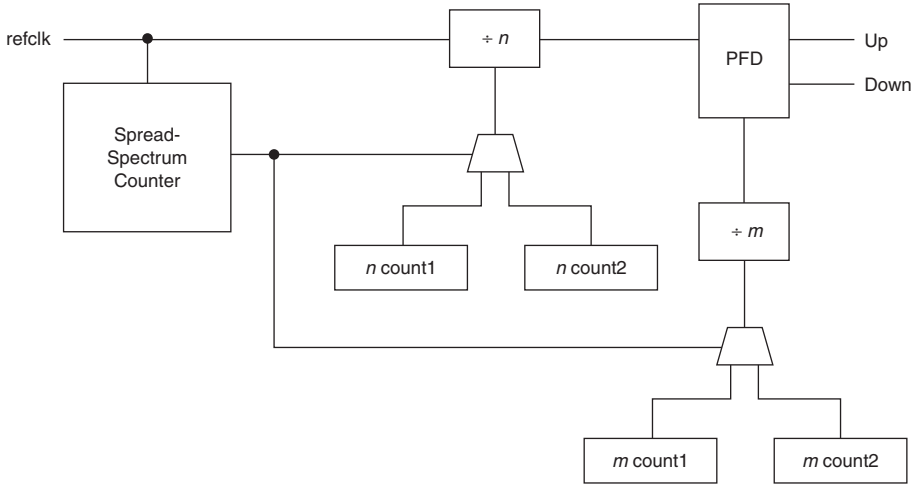

Figure 1–34 shows a VCO frequency waveform when toggling between different counter values. Since the enhanced PLL switches between two different m and n values, the result is a straight line between two frequencies, which gives a linear modulation. The magnitude of modulation is determined by the ratio of two m/n sets. The percent spread is determined by:

$$\text{percent spread} = (f_{VCOmax} - f_{VCOmin})/f_{VCOmax} = 1\ [(m_2 \times n_1)/(m_1 \times n_2)].$$

The maximum and minimum VCO frequency is defined as:

$$f_{VCOmax} = (m_1/n_1) \times f_{REF}$$

$$f_{VCOmin} = (m_2/n_2) \times f_{REF}$$

Figure 1–34. VCO Frequency Modulation Waveform

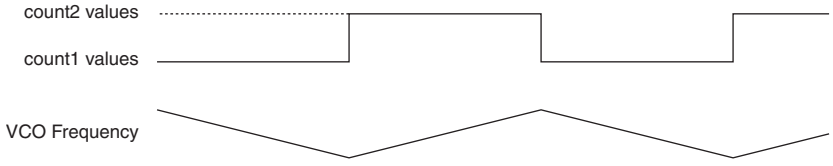

Software Support

You can enter the desired down-spread percentage and modulation frequency in the `altpll` megafunction through the Quartus II software. Alternatively, the `downspread` parameter in the `altpll` megafunction can be set to the desired down-spread percentage. Timing analysis ensures the design operates at the maximum spread frequency and meets all timing requirements.

For more information about PLL software support in the Quartus II software, see the *altpll Megafunction User Guide*.

Guidelines

If the design cascades PLLs, the source (upstream) PLL should have a low-bandwidth setting, while the destination (downstream) PLL should have a high-bandwidth setting. The upstream PLL must have a low-bandwidth setting because a PLL does not generate jitter higher than its bandwidth. The downstream PLL must have a high bandwidth setting to track the jitter. The design must use the spread-spectrum feature in a low-bandwidth PLL, and, therefore, the Quartus II software automatically sets the spread-spectrum PLL bandwidth to low.

If the programmable or reconfigurable bandwidth features are used, then you cannot use spread spectrum.

Stratix II and Stratix II GX devices can accept a spread-spectrum input with typical modulation frequencies. However, the device cannot automatically detect that the input is a spread-spectrum signal. Instead, the input signal looks like deterministic jitter at the input of the downstream PLL.

Spread spectrum can have a minor effect on the output clock by increasing the period jitter. Period jitter is the deviation of a clock's cycle time from its previous cycle position. Period jitter measures the variation of the clock output transition from its ideal position over consecutive edges.

With down-spread modulation, the peak of the modulated waveform is the actual target frequency. Therefore, the system never exceeds the maximum clock speed. To maintain reliable communication, the entire system and subsystem should use the Stratix II and Stratix II GX device as the clock source. Communication could fail if the Stratix II or Stratix II GX logic array is clocked by the spread-spectrum clock, but the data it receives from another device is not clocked by the spread spectrum.

Since spread spectrum affects the *m* counter values, all spread-spectrum PLL outputs are effected. Therefore, if only one spread-spectrum signal is needed, the clock signal should use a separate PLL without other outputs from that PLL.

No special considerations are needed when using spread spectrum with the clock switchover feature. This is because the clock switchover feature does not affect the *m* and *n* counter values, which are the counter values switching when using spread spectrum.

Board Layout

The enhanced and fast PLL circuits in Stratix II and Stratix II GX devices contain analog components embedded in a digital device. These analog components have separate power and ground pins to minimize noise generated by the digital components. Stratix II and Stratix II GX enhanced and fast PLLs use separate V_{CC} and ground pins to isolate circuitry and improve noise resistance.

V_{CCA} and GNDA

Each enhanced and fast PLL uses separate V_{CC} and ground pin pairs for their analog circuitry. The analog circuit power and ground pin for each PLL is called VCCA_PLL<*PLL number*> and GNDA_PLL<*PLL number*>. Connect the V_{CCA} power pin to a 1.2-V power supply, even if you do not use the PLL. Isolate the power connected to V_{CCA} from the power to the rest of the Stratix II or Stratix II GX device or any other digital device on the board. You can use one of three different methods of isolating the V_{CCA} pin: separate V_{CCA} power planes, a partitioned V_{CCA} island within the V_{CCINT} plane, and thick V_{CCA} traces.

Separate V_{CCA} Power Plane

A mixed signal system is already partitioned into analog and digital sections, each with its own power planes on the board. To isolate the V_{CCA} pin using a separate V_{CCA} power plane, connect the V_{CCA} pin to the analog 1.2-V power plane.

Partitioned V_{CCA} Island Within V_{CCINT} Plane

Fully digital systems do not have a separate analog power plane on the board. Since it is expensive to add new planes to the board, you can create islands for VCCA_PLL. Figure 1–35 shows an example board layout with an analog power island. The dielectric boundary that creates the island should be 25 mils thick. Figure 1–36 shows a partitioned plane within V_{CCINT} for V_{CCA}.

Figure 1–35. V_{CCINT} Plane Partitioned for V_{CCA} Island

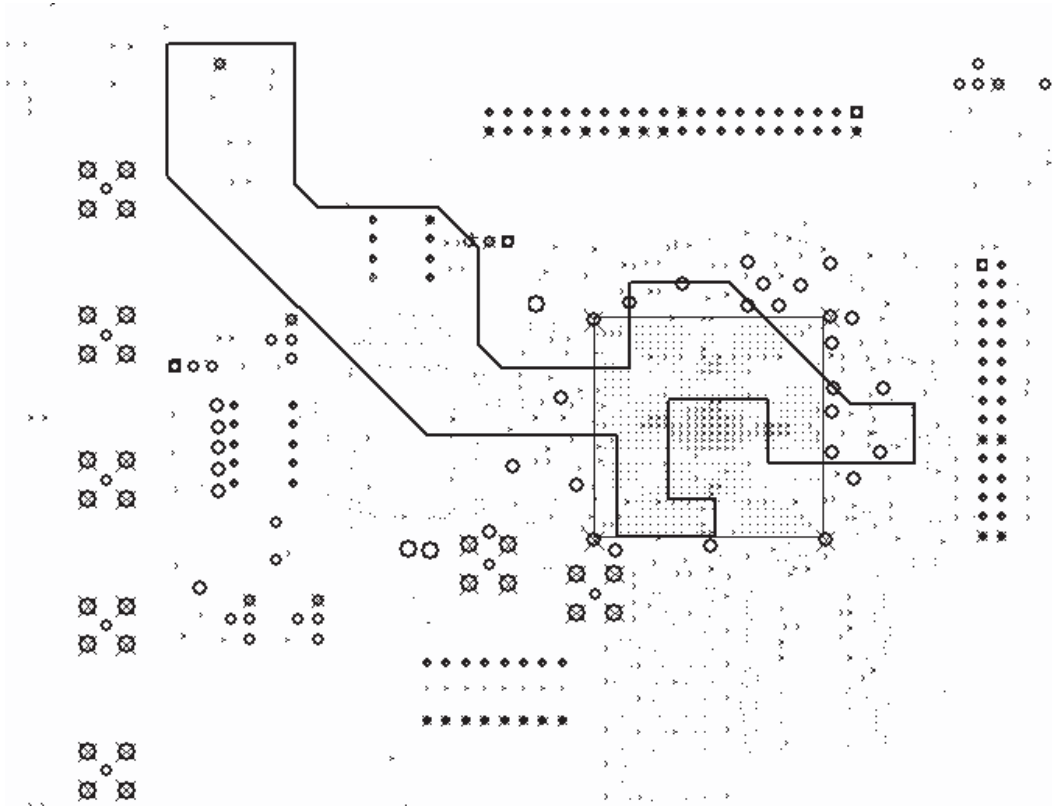

Thick V_{CCA} Trace

Because of board constraints, you may not be able to partition a V_{CCA} island. Instead, run a thick trace from the power supply to each V_{CCA} pin. The traces should be at least 20 mils thick.

In each of these three cases, you should filter each VCCA_PLL pin with a decoupling circuit, as shown in Figure 1–36. Place a ferrite bead that exhibits high impedance at frequencies of 50 MHz or higher and a 10-µF tantalum parallel capacitor where the power enters the board. Decouple each VCCA_PLL pin with a 0.1-µF and 0.001-µF parallel combination of ceramic capacitors located as close as possible to the Stratix II or Stratix II GX device. You can connect the GNDA_PLL pins directly to the same ground plane as the device's digital ground.

Figure 1–36. PLL Power Schematic for Stratix II and Stratix II GX PLLs

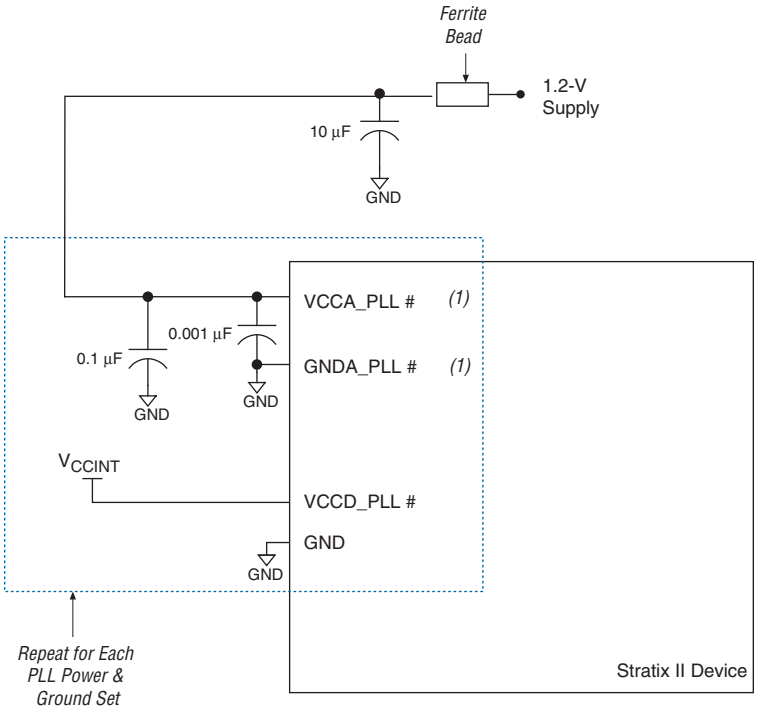

Note to Figure 1–36
(1) Applies to PLLs 1 through 12.

V_{CCD}

The digital power and ground pins are labeled VCCD_PLL<*PLL number*> and GND. The VCCD pin supplies the power for the digital circuitry in the PLL. Connect these VCCD pins to the quietest digital supply on the board. In most systems, this is the digital 1.2-V supply supplied to the device's V_{CCINT} pins. Connect the VCCD pins to a power supply even if you do not use the PLL. When connecting the V_{CCD} pins to V_{CCINT}, you do not need any filtering or isolation. You can connect the GND pins directly to the same ground plane as the device's digital ground. See Figure 1–36.

External Clock Output Power

Enhanced PLLs 5, 6, 11, and 12 also have isolated power pins for their dedicated external clock outputs (VCC_PLL5_OUT, VCC_PLL6_OUT, VCC_PLL11_OUT and VCC_PLL12_OUT, respectively). Since the

dedicated external clock outputs from a particular enhanced PLL are powered by separate power pins, they are less susceptible to noise. They also reduce the overall jitter of the output clock by providing improved isolation from switching I/O pins.



I/O pins that reside in PLL banks 9 through 12 are powered by the VCC_PLL<*5, 6, 11, or 12*>_OUT pins, respectively. The EP2S60F484, EP2S60F780, EP2S90H484, EP2S90F780, and EP2S130F780 devices do not support PLLs 11 and 12. Therefore, any I/O pins that reside in bank 11 are powered by the VCCIO3 pin, and any I/O pins that reside in bank 12 are powered by the VCCIO8 pin.

The VCC_PLL_OUT pins can by powered by 3.3, 2.5, 1.8, or 1.5 V, depending on the I/O standard for the clock output from a particular enhanced PLL, as shown in Figure 1–37.

Figure 1–37. External Clock Output Pin Association with Output Power

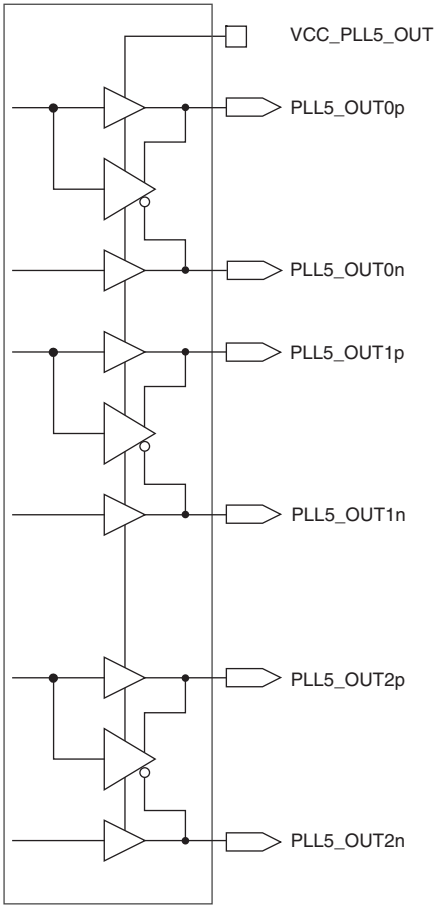

Filter each isolated power pin with a decoupling circuit shown in Figure 1–38. Decouple the isolated power pins with parallel combination of 0.1- and 0.001-µF ceramic capacitors located as close as possible to the Stratix II or Stratix II GX device.

Figure 1–38. Stratix II and Stratix II GX PLL External Clock Output Power Ball Connection *Note (1)*

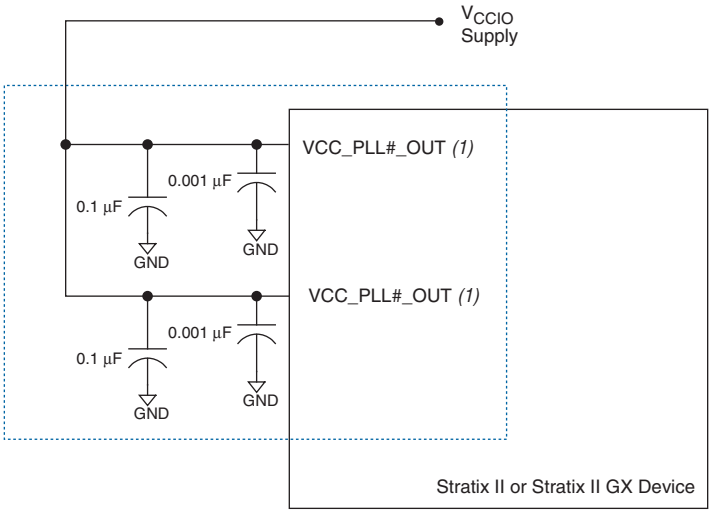

Note to Figure 1–38:
(1) Applies only to enhanced PLLs 5, 6, 11, and 12.

Guidelines

Use the following guidelines for optimal jitter performance on the external clock outputs from enhanced PLLs 5, 6, 11, and 12. If all outputs are running at the same frequency, these guidelines are not necessary to improve performance.

- Use phase shift to ensure edges are not coincident on all the clock outputs.
- Use phase shift to skew clock edges with respect to each other for best jitter performance.

If you cannot drive multiple clocks of different frequencies and phase shifts or isolate banks, you should control the drive capability on the lower-frequency clock. Reducing how much current the output buffer has to supply can reduce the noise. Minimize capacitive load on the slower frequency output and configure the output buffer to lower current strength. The higher-frequency output should have an improved performance, but this may degrade the performance of your lower-frequency clock output.

PLL Specifications



See the *DC & Switching Characteristics* chapter in volume 1 of the *Stratix II GX Device Handbook* (or the *Stratix II Device Handbook*) for information about PLL timing specifications

Clocking

Stratix II and Stratix II GX devices provide a hierarchical clock structure and multiple PLLs with advanced features. The large number of clocking resources in combination with the clock synthesis precision provided by enhanced and fast PLLs provides a complete clock-management solution.

Global and Hierarchical Clocking

Stratix II and Stratix II GX devices provide 16 dedicated global clock networks and 32 regional clock networks. These clocks are organized into a hierarchical clock structure that allows for 24 unique clock sources per device quadrant with low skew and delay. This hierarchical clocking scheme provides up to 48 unique clock domains within the entire Stratix II or Stratix II GX device. Table 1–17 lists the clock resources available on Stratix II devices.

There are 16 dedicated clock pins (`CLK[15..0]`) on Stratix II and Stratix II GX devices to drive either the global or regional clock networks. Four clock pins drive each side of the Stratix II device, as shown in Figures 1–39 and 1–40**.** Enhanced and fast PLL outputs can also drive the global and regional clock networks.

Table 1–17. Clock Resource Availability in Stratix II and Stratix II GX Devices (Part 1 of 2)

Description	Stratix II Device Availability	Stratix II GX Device Availability
Number of clock input pins	24	12
Number of global clock networks	16	16
Number of regional clock networks	32	32
Global clock input sources	Clock input pins, PLL outputs, logic array	Clock input pins, PLL outputs, logic array, inter-transceiver clocks
Regional clock input sources	Clock input pins, PLL outputs, logic array	Clock input pins, PLL outputs, logic array, inter-transceiver clocks
Number of unique clock sources in a quadrant	24 (16 global clocks and 8 regional clocks)	24 (16 GCLK and 8 RCLK clocks)
Number of unique clock sources in the entire device	48 (16 global clocks and 32 regional clocks)	48 (16 GCLK and 32 RCLK clocks)

Table 1–17. Clock Resource Availability in Stratix II and Stratix II GX Devices (Part 2 of 2)

Description	Stratix II Device Availability	Stratix II GX Device Availability
Power-down mode	Global clock networks, regional clock networks, dual-regional clock region	GCLK, RCLK networks, dual-regional clock region
Clocking regions for high fan-out applications	Quadrant region, dual-regional, entire device via global clock or regional clock networks	Quadrant region, dual-regional, entire device via GCLK or RCLK networks

Global Clock Network

Global clocks drive throughout the entire device, feeding all device quadrants. All resources within the device IOEs, adaptive logic modules (ALMs), digital signal processing (DSP) blocks, and all memory blocks can use the global clock networks as clock sources. These resources can also be used for control signals, such as clock enables and synchronous or asynchronous clears fed by an external pin. Internal logic can also drive the global clock networks for internally generated global clocks and asynchronous clears, clock enables, or other control signals with large fanout. Figure 1–39 shows the 16 dedicated CLK pins driving global clock networks.

Figure 1–39. Global Clocking *Note (1)*

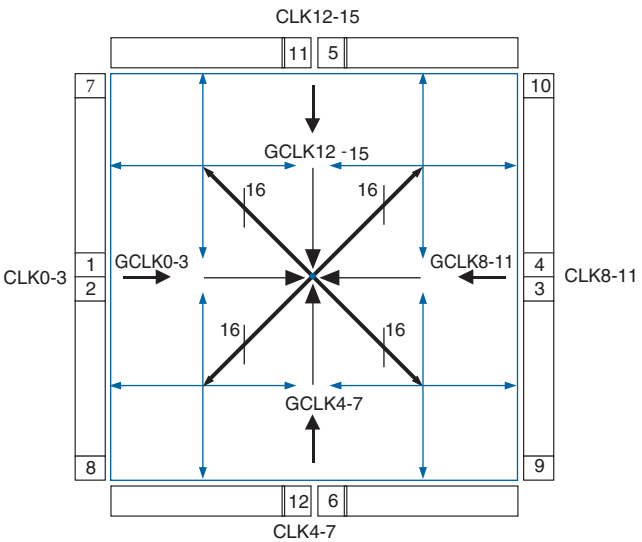

Note to Figure 1–39:

(1) Stratix II GX devices do not have PLLs 3, 4, 9, and 10 or clock pins 8, 9, 10, and 11.

Regional Clock Network

Eight regional clock networks within each quadrant of the Stratix II and Stratix II GX device are driven by the dedicated `CLK[15..0]` input pins or from PLL outputs. The regional clock networks only pertain to the quadrant they drive into. The regional clock networks provide the lowest clock delay and skew for logic contained within a single quadrant. Internal logic can also drive the regional clock networks for internally generated regional clocks and asynchronous clears, clock enables, or other control signals with large fanout.The `CLK` clock pins symmetrically drive the RCLK networks within a particular quadrant, as shown in Figure 1–40. Refer to Table 1–18 on page 1–67 and Table 1–19 on page 1–68 for RCLK connections from `CLK` pins and PLLs.

Figure 1–40. Regional Clocking *Note (1)*

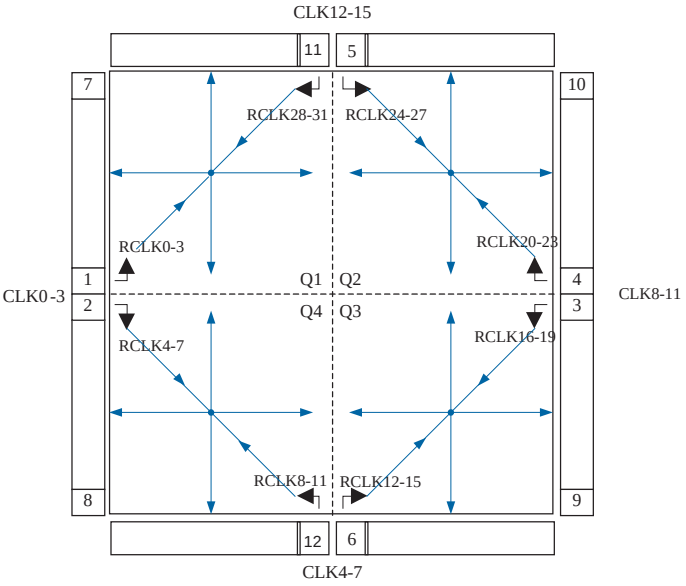

Note to Figure 1–40:
(1) Stratix II GX devices do not have PLLs 3, 4, 9, and 10 or clock pins 8, 9, 10, and 11.

Clock Sources Per Region

Each Stratix II and Stratix II GX device has 16 global clock networks and 32 regional clock networks that provide 48 unique clock domains for the entire device. There are 24 unique clocks available in each quadrant (16 global clocks and 8 regional clocks) as the input resources for registers (see Figure 1–41).

Figure 1–41. Hierarchical Clock Networks Per Quadrant

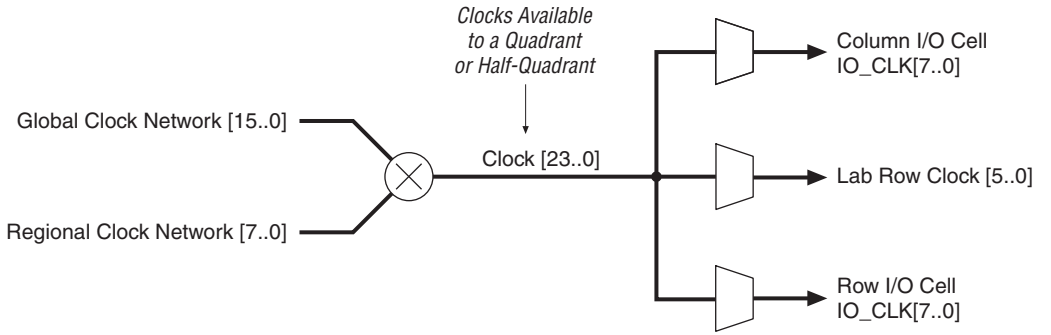

Stratix II and Stratix II GX clock networks provide three different clocking regions:

- Entire device clock region
- Quadrant clock region
- Dual-regional clock region

These clock network options provide more flexibility for routing signals that have high fan-out to improve the interface timing. By having various sized clock regions, it is possible to prioritize the number of registers the network can reach versus the total delay of the network.

In the first clock scheme, a source (not necessarily a clock signal) drives a global clock network that can be routed through the entire device. This has the maximum delay for a low skew high fan-out signal but allows the signal to reach every block within the device. This is a good option for routing global resets or clear signals.

In the second clock scheme, a source drives a single-quadrant region. This represents the fastest, low-skew, high-fan-out signal-routing resource within a quadrant. The limitation to this resource is that it only covers a single quadrant.

In the third clock scheme, a single source (clock pin or PLL output) can generate a dual-regional clock by driving two regional clock network lines (one from each quadrant). This allows logic that spans multiple quadrants to utilize the same low-skew clock. The routing of this signal on an entire side has approximately the same speed as in a quadrant clock region. The internal logic-array routing that can drive a regional clock also supports this feature. This means internal logic can drive a

dual-regional clock network. Corner fast PLL outputs only span one quadrant and hence cannot form a dual-regional clock network. Figure 1–42 shows this feature pictorially.

Figure 1–42. Stratix II and Stratix II GX Dual-Regional Clock Region

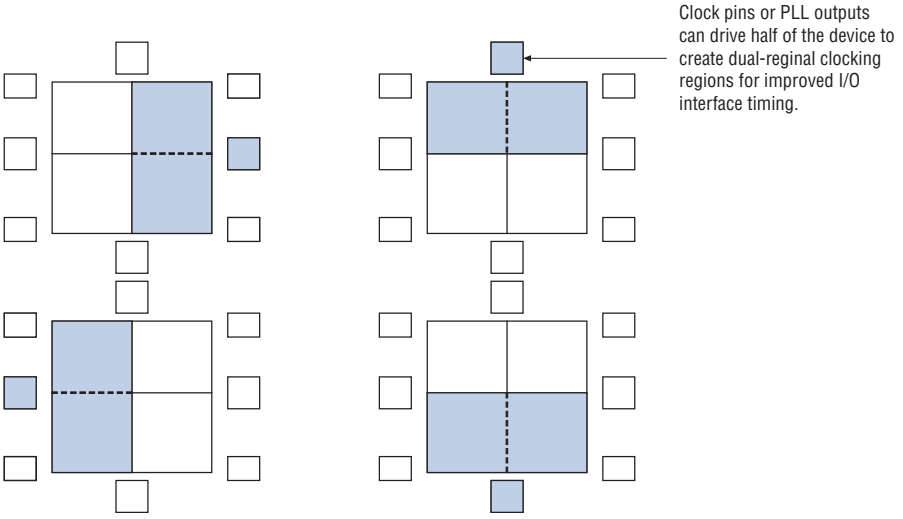

The 16 clock input pins, enhanced or fast PLL outputs, and internal logic array can be the clock input sources to drive onto either global or regional clock networks. The CLKn pins also drive the global clock network as shown in Table 1–22 on page 1–72. Tables 1–18 and 1–19 for the connectivity between CLK pins as well as the global and regional clock networks.

Clock Inputs

The clock input pins CLK[15..0] are also used for high fan-out control signals, such as asynchronous clears, presets, clock enables, or protocol signals such as TRDY and IRDY for PCI through global or regional clock networks.

Internal Logic Array

Each global and regional clock network can also be driven by logic-array routing to enable internal logic to drive a high fan-out, low-skew signal.

PLL Outputs

All clock networks can be driven by the PLL counter outputs.

Table 1–18 shows the connection of the clock pins to the global clock resources. The reason for the higher level of connectivity is to support user controllable global clock multiplexing.

Table 1–18. Clock Input Pin Connectivity to Global Clock Networks

Clock Resource	CLK(p) (Pin)															
	0	1	2	3	4	5	6	7	8	9	10	11	12	13	14	15
GCLK0	✓	✓														
GCLK1	✓	✓														
GCLK2			✓	✓												
GCLK3			✓	✓												
GCLK4					✓	✓										
GCLK5					✓	✓										
GCLK6							✓	✓								
GCLK7							✓	✓								
GCLK8											✓ (1)	✓ (1)				
GCLK9											✓ (1)	✓ (1)				
GCLK10									✓ (1)	✓ (1)						
GCLK11									✓ (1)	✓ (1)						
GCLK12															✓	✓
GCLK13															✓	✓
GCLK14													✓	✓		
GCLK15													✓	✓		

Note to Table 1–18:

(1) Clock pins 8, 9, 10, and 11 are not available in Stratix II GX devices. Therefore, these connections do not exist in Stratix II GX devices.

Table 1–19 summarizes the connectivity between the clock pins and the regional clock networks. Here, each clock pin can drive two regional clock networks, facilitating stitching of the clock networks to support the ability to drive two quadrants with the same clock or signal.

Table 1–19. Clock Input Pin Connectivity to Regional Clock Networks (Part 1 of 2)

Clock Resource	CLK(p) (Pin)															
	0	1	2	3	4	5	6	7	8	9	10	11	12	13	14	15
RCLK0	✓															
RCLK1		✓														
RCLK2			✓													
RCLK3				✓												
RCLK4	✓															
RCLK5		✓														
RCLK6			✓													
RCLK7				✓												
RCLK8					✓											
RCLK9						✓										
RCLK10							✓									
RCLK11								✓								
RCLK12					✓											
RCLK13						✓										
RCLK14							✓									
RCLK15								✓								
RCLK16											✓ (1)					
RCLK17												✓ (1)				
RCLK18									✓ (1)							
RCLK19										✓ (1)						
RCLK20											✓ (1)					
RCLK21												✓ (1)				
RCLK22									✓ (1)							

Table 1–19. Clock Input Pin Connectivity to Regional Clock Networks (Part 2 of 2)

Clock Resource	CLK(p) (Pin)															
	0	1	2	3	4	5	6	7	8	9	10	11	12	13	14	15
RCLK23										✓ (1)						
RCLK24															✓	
RCLK25																✓
RCLK26													✓			
RCLK27														✓		
RCLK28															✓	
RCLK29																✓
RCLK30													✓			
RCLK31														✓		

Note to Table 1–19:

(1) Clock pins 8, 9, 10, and 11 are not available in Stratix II GX devices. Therefore, these connections do not exist in Stratix II GX devices.

Clock Input Connections

Four CLK pins drive each enhanced PLL. You can use any of the pins for clock switchover inputs into the PLL. The CLK pins are the primary clock source for clock switchover, which is controlled in the Quartus II software. Enhanced PLLs 5, 6, 11, and 12 also have feedback input pins, as shown in Table 1–20.

Input clocks for fast PLLs 1, 2, 3, and 4 come from CLK pins. A multiplexer chooses one of two possible CLK pins to drive each PLL. This multiplexer is not a clock switchover multiplexer and is only used for clock input connectivity.

Either an FPLLCLK input pin or a CLK pin can drive the fast PLLs in the corners (7, 8, 9, and 10) when used for general-purpose applications. CLK pins cannot drive these fast PLLs in high-speed differential I/O mode.

Tables 1–20 and 1–21 show which PLLs are available in each Stratix II and Stratix II GX device, respectively, and which input clock pin drives which PLLs.

Table 1–20. Stratix II Device PLLs and PLL Clock Pin Drivers (Part 1 of 2)

Input Pin	All Devices						EP2S60 to EP2S180 Devices					
	Fast PLLs				Enhanced PLLs		Fast PLLs				Enhanced PLLs	
	1	2	3	4	5	6	7	8	9	10	11	12
CLK0	✓	✓					✓ (1)	✓ (1)				
CLK1 (2)	✓	✓					✓ (1)	✓ (1)				
CLK2	✓	✓					✓ (1)	✓ (1)				
CLK3 (2)	✓	✓					✓ (1)	✓ (1)				
CLK4						✓						✓
CLK5						✓						✓
CLK6						✓						✓
CLK7						✓						✓
CLK8			✓	✓					✓ (1)	✓ (1)		
CLK9 (2)			✓	✓					✓ (1)	✓ (1)		
CLK10			✓	✓					✓ (1)	✓ (1)		
CLK11 (2)			✓	✓					✓ (1)	✓ (1)		
CLK12					✓						✓	
CLK13					✓						✓	
CLK14					✓						✓	
CLK15					✓						✓	
PLL5_FB					✓							
PLL6_FB						✓						
PLL11_FB											✓	
PLL12_FB												✓
PLL_ENA	✓	✓	✓	✓	✓	✓	✓	✓	✓	✓	✓	✓
FPLL7CLK (2)							✓					
FPLL8CLK (2)								✓				
FPLL9CLK (2)									✓			

Table 1–20. Stratix II Device PLLs and PLL Clock Pin Drivers (Part 2 of 2)

Input Pin	All Devices						EP2S60 to EP2S180 Devices					
	Fast PLLs				Enhanced PLLs		Fast PLLs				Enhanced PLLs	
	1	2	3	4	5	6	7	8	9	10	11	12
FPLL10CLK *(2)*										✓		

Notes to Table 1–20:
(1) Clock connection is available. For more information about the maximum frequency, contact Altera Applications.
(2) This is a dedicated high-speed clock input. For more information about the maximum frequency, contact Altera Applications.

Table 1–21. Stratix II GX Device PLLs and PLL Clock Pin Drivers (Part 1 of 2)

Input Pin	All Devices						EP2SGX60 to EP2SGX130 Devices					
	Fast PLLs				Enhanced PLLs		Fast PLLs				Enhanced PLLs	
	1	2	3 *(1)*	4 *(1)*	5	6	7	8	9 *(1)*	10 *(1)*	11	12
CLK0	✓	✓					✓*(2)*	✓*(2)*				
CLK1 *(2)*	✓	✓					✓*(2)*	✓*(2)*				
CLK2	✓	✓					✓*(2)*	✓*(2)*				
CLK3 *(2)*	✓	✓					✓*(2)*	✓*(2)*				
CLK4						✓						✓
CLK5						✓						✓
CLK6						✓						✓
CLK7						✓						✓
CLK8 *(4)*												
CLK9 *(3)*, *(4)*												
CLK10 *(4)*												
CLK11 *(3)*, *(4)*												
CLK12					✓						✓	
CLK13					✓						✓	
CLK14					✓						✓	
CLK15					✓						✓	
PLL5_FB					✓							
PLL6_FB						✓						
PLL11_FB											✓	

Table 1–21. Stratix II GX Device PLLs and PLL Clock Pin Drivers (Part 2 of 2)

Input Pin	All Devices						EP2SGX60 to EP2SGX130 Devices					
	Fast PLLs				Enhanced PLLs		Fast PLLs				Enhanced PLLs	
	1	2	3 *(1)*	4 *(1)*	5	6	7	8	9 *(1)*	10 *(1)*	11	12
PLL12_FB												✓
PLL_ENA	✓	✓			✓	✓	✓	✓			✓	✓
FPLL7CLK *(3)*							✓					
FPLL8CLK *(3)*								✓				
FPLL9CLK *(3)*												
FPLL10CLK *(3)*												

Notes to Table 1–21:

(1) PLLs 3, 4, 9, and 10 are not available in Stratix II GX devices.
(2) Clock connection is available. For more information about the maximum frequency, contact Altera Applications.
(3) This is a dedicated high-speed clock input. For more information about the maximum frequency, contact Altera Applications.
(4) Input pins `CLK[11..8]` are not available in Stratix II GX devices.

CLK(n) Pin Connectivity to Global Clock Networks

In Stratix II and Stratix II GX devices, the `clk(n)` pins can also feed the global clock network. Table 1–22 shows the `clk(n)` pin connectivity to global clock networks.

Table 1–22. CLK(n) Pin Connectivity to Global Clock Network

Clock Resource	CLK(n) pin							
	4	5	6	7	12	13	14	15
GCLK4	✓							
GCLK5		✓						
GCLK6			✓					
GCLK7				✓				
GCLK12							✓	
GCLK13								✓
GCLK14					✓			
GCLK15						✓		

Clock Source Control For Enhanced PLLs

The clock input multiplexer for enhanced PLLs is shown in Figure 1–43. This block allows selection of the PLL clock reference from several different sources. The clock source to an enhanced PLL can come from any one of four clock input pins `CLK[3..0]`, or from a logic-array clock, provided the logic array clock is driven by an output from another PLL, a pin-driven dedicated global or regional clock, or through a clock control block, provided the clock control block is fed by an output from another PLL or a pin-driven dedicated global or regional clock. An internally generated global signal cannot drive the PLL. The clock input pin connections to the respective enhanced PLLs are shown in Table 1–20 above. The multiplexer select lines are set in the configuration file only. Once programmed, this block cannot be changed without loading a new configuration file. The Quartus II software automatically sets the multiplexer select signals depending on the clock sources that a user selects in the design.

Figure 1–43. Enhanced PLL Clock Input Multiplex Logic

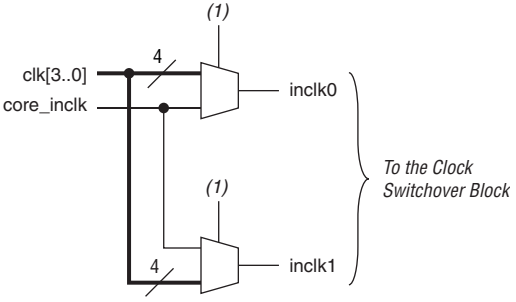

Note to Figure 1–43:

(1) The input clock multiplexing is controlled through a configuration file only and cannot be dynamically controlled in user mode.

Clock Source Control for Fast PLLs

Each center fast PLL has five clock input sources, four from clock input pins, and one from a logic array signal, provided the logic array signal is driven by an output from another PLL, a pin-driven dedicated global or regional clock, or through a clock control block, provided the clock control block is fed by an output from another PLL or a pin-driven dedicated global or regional clock. An internally generated global signal cannot drive the PLL. When using clock input pins as the clock source, you can perform manual clock switchover among the input clock sources.

The clock input multiplexer control signals for performing clock switchover are from core signals. Figure 1–44 shows the clock input multiplexer control circuit for a center fast PLL.

Figure 1–44. Center Fast PLL Clock Input Multiplexer Control

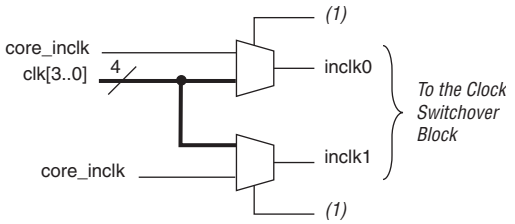

Note to Figure 1–44:
(1) The input clock multiplexing is controlled through a configuration file only and cannot be dynamically controlled in user mode.

Each corner fast PLL has three clock input sources, one from a dedicated corner clock input pin, one from a center clock input pin, and one from a logic array clock, provided the logic array signal is driven by an output from another PLL, a pin-driven dedicated global or regional clock, or through a clock control block, provided the clock control block is fed by an output from another PLL or a pin-driven dedicated global or regional clock. An internally generated global signal cannot drive the PLL. Figure 1–45 shows a block diagram showing the clock input multiplexer control circuit for a corner fast PLL. Only the corner FPLLCLK pin is fully compensated.

Figure 1–45. Corner Fast PLL Clock Input Multiplexer Control

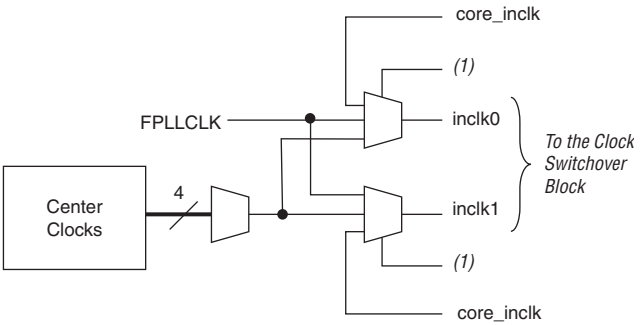

Note to Figure 1–45:
(1) The input clock multiplexing is controlled through a configuration file only and cannot be dynamically controlled in user mode.

Delay Compensation for Fast PLLs

Each center fast PLL can be fed by any one of four possible input clock pins. Among the four clock input signals, only two are fully compensated, i.e., the clock delay to the fast PLL matches the delay in the data input path when used in the LVDS receiver mode. The two clock inputs that match the data input path are located right next to the fast PLL. The two clock inputs that do not match the data input path are located next to the neighboring fast PLL. Figure 1–46 shows the above description for the left-side center fast PLL pair. If the PLL is used in non-LVDS modes, then any of the four dedicated clock inputs can be used and are compensated.

Fast PLL 1 and PLL 2 can choose among `CLK[3..0]` as the clock input source. However, for fast PLL 1, only `CLK0` and `CLK1` have their delay matched to the data input path delay when used in the LVDS receiver mode operation. The delay from `CLK2` or `CLK3` to fast PLL 1 does not match the data input delay. For fast PLL 2, only `CLK2` and `CLK3` have their delay matched to the data input path delay in LVDS receiver mode operation. The delay from `CLK0` or `CLK1` to fast PLL 2 does not match the data input delay. The same arrangement applies to the right side center fast PLL pair. For corner fast PLLs, only the corner `FPLLCLK` pins are fully compensated. For LVDS receiver operation, it is recommended to use the delay compensated clock pins only.

Figure 1–46. Delay Compensated Clock Input Pins for Center Fast PLL Pair

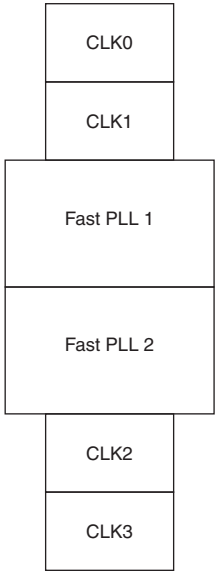

Clock Output Connections

Enhanced PLLs have outputs for eight regional clock outputs and four global clock outputs. There is line sharing between clock pins, global and regional clock networks and all PLL outputs. See Tables 1–18 through 1–23 and Figures 1–47 through 1–53 to validate your clocking scheme. The Quartus II software automatically maps to regional and global clocks to avoid any restrictions. Enhanced PLLs 5, 6, 11, and 12 drive out to single-ended pins as shown in Table 1–23.

You can connect each fast PLL 1, 2, 3, or 4 output (`C0`, `C1`, `C2`, and `C3`) to either a global or a regional clock. There is line sharing between clock pins, `FPLLCLK` pins, global and regional clock networks, and all PLL outputs. The Quartus II software will automatically map to regional and global clocks to avoid any restrictions.

Figure 1–47 shows the clock input and output connections from the enhanced PLLs.



EP2S15, EP2S30, and EP2SGX30 devices have only two enhanced PLLs (5, 6), but the connectivity from these two PLLs to the global or regional clock networks remains the same.

The EP2S60 device in the 1,020-pin package contains 12 PLLs. EP2S60 devices in the 484-pin and 672-pin packages contain fast PLLs 1–4 and enhanced PLLs 5 and 6.

EP2S90 devices in the 1020-pin and 1508-pin packages contain 12 PLLs. EP2S90 devices in the 484-pin and 780-pin packages contain fast PLLs 1–4 and enhanced PLLs 5 and 6.

EP2S130 devices in the 1020-pin and 1508-pin packages contain 12 PLLs. The EP2S130 device in the 780-pin package contains fast PLLs 1–4 and enhanced PLLs 5 and 6.

Figure 1–47. Stratix II and Stratix II GX Top and Bottom Enhanced PLLs, Clock Pin and Logic Array Signal Connectivity to Global and Regional Clock Networks *Notes (1) and (2)*

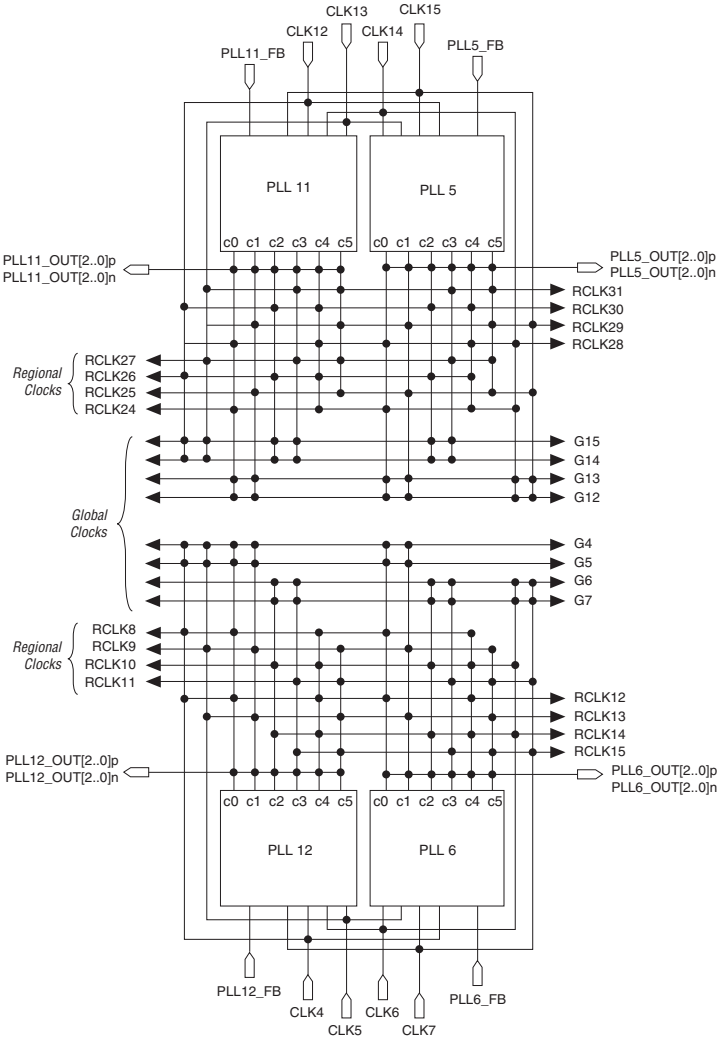

Notes to Figure 1–47:

(1) The redundant connection dots facilitate stitching of the clock networks to support the ability to drive two quadrants with the same clock.

(2) The enhanced PLLs can also be driven through the global or regional clock networks. The global or regional clock input can be driven by an output from another PLL, a pin-driven dedicated global or regional clock, or through a clock control block, provided the clock control block is fed by an output from another PLL or a pin-driven dedicated global or regional clock. An internally generated global signal cannot drive the PLL.

Tables 1–23 and 1–24 show the global and regional clocks that the PLL outputs drive.

Table 1–23. Stratix II Global and Regional Clock Outputs From PLLs (Part 1 of 3)

Clock Network	PLL Number and Type											
	EP2S15 through EP2S30 Devices						EP2S60 through EP2S180 Devices					
	Fast PLLs				Enhanced PLLs		Fast PLLs				Enhanced PLLs	
	1	2	3	4	5	6	7	8	9	10	11	12
GCLK0	✓	✓					✓	✓				
GCLK1	✓	✓					✓	✓				
GCLK2	✓	✓					✓	✓				
GCLK3	✓	✓					✓	✓				
GCLK4						✓						✓
GCLK5						✓						✓
GCLK6						✓						✓
GCLK7						✓						✓
GCLK8			✓	✓					✓	✓		
GCLK9			✓	✓					✓	✓		
GCLK10			✓	✓					✓	✓		
GCLK11			✓	✓					✓	✓		
GCLK12					✓						✓	
GCLK13					✓						✓	
GCLK14					✓						✓	
GCLK15					✓						✓	
RCLK0	✓	✓					✓					
RCLK1	✓	✓					✓					
RCLK2	✓	✓					✓					
RCLK3	✓	✓					✓					
RCLK4	✓	✓						✓				
RCLK5	✓	✓						✓				
RCLK6	✓	✓						✓				
RCLK7	✓	✓						✓				
RCLK8						✓						✓
RCLK9						✓						✓

Table 1–23. Stratix II Global and Regional Clock Outputs From PLLs (Part 2 of 3)

Clock Network	PLL Number and Type											
	EP2S15 through EP2S30 Devices						EP2S60 through EP2S180 Devices					
	Fast PLLs				Enhanced PLLs		Fast PLLs				Enhanced PLLs	
	1	2	3	4	5	6	7	8	9	10	11	12
RCLK10						✓						✓
RCLK11						✓						✓
RCLK12						✓						✓
RCLK13						✓						✓
RCLK14						✓						✓
RCLK15						✓						✓
RCLK16			✓	✓					✓			
RCLK17			✓	✓					✓			
RCLK18			✓	✓					✓			
RCLK19			✓	✓					✓			
RCLK20			✓	✓						✓		
RCLK21			✓	✓						✓		
RCLK22			✓	✓						✓		
RCLK23			✓	✓						✓		
RCLK24					✓						✓	
RCLK25					✓						✓	
RCLK26					✓						✓	
RCLK27					✓						✓	
RCLK28					✓						✓	
RCLK29					✓						✓	
RCLK30					✓						✓	
RCLK31					✓						✓	
External Clock Output												
PLL5_OUT[3..0]p/n					✓							
PLL6_OUT[3..0]p/n						✓						

Table 1–23. Stratix II Global and Regional Clock Outputs From PLLs (Part 3 of 3)

Clock Network	PLL Number and Type											
	EP2S15 through EP2S30 Devices						EP2S60 through EP2S180 Devices					
	Fast PLLs				Enhanced PLLs		Fast PLLs				Enhanced PLLs	
	1	2	3	4	5	6	7	8	9	10	11	12
PLL11_OUT[3..0]p/n											✓	
PLL12_OUT[3..0]p/n												✓

Table 1–24. Stratix II GX Global and Regional Clock Outputs From PLLs (Part 1 of 3)

Clock Network	PLL Number and Type											
	EP2SGX30 Devices						EP2SGX60 through EP2SGX130 Devices *Notes (2)*, *(3)*, and *(4)*					
	Fast PLLs				Enhanced PLLs		Fast PLLs				Enhanced PLLs	
	1	2	3 *(1)*	4 *(1)*	5	6	7	8	9 *(1)*	10 *(1)*	11	12
GCLK0	✓	✓					✓	✓				
GCLK1	✓	✓					✓	✓				
GCLK2	✓	✓					✓	✓				
GCLK3	✓	✓					✓	✓				
GCLK4						✓						✓
GCLK5						✓						✓
GCLK6						✓						✓
GCLK7						✓						✓
GCLK8												
GCLK9												
GCLK10												
GCLK11												
GCLK12					✓						✓	
GCLK13					✓						✓	
GCLK14					✓						✓	
GCLK15					✓						✓	

Table 1–24. Stratix II GX Global and Regional Clock Outputs From PLLs (Part 2 of 3)

Clock Network	PLL Number and Type											
	EP2SGX30 Devices						EP2SGX60 through EP2SGX130 Devices *Notes (2), (3), and (4)*					
	Fast PLLs				Enhanced PLLs		Fast PLLs				Enhanced PLLs	
	1	2	3 *(1)*	4 *(1)*	5	6	7	8	9 *(1)*	10 *(1)*	11	12
RCLK0	✓	✓					✓					
RCLK1	✓	✓					✓					
RCLK2	✓	✓					✓					
RCLK3	✓	✓					✓					
RCLK4	✓	✓						✓				
RCLK5	✓	✓						✓				
RCLK6	✓	✓						✓				
RCLK7	✓	✓						✓				
RCLK8						✓						✓
RCLK9						✓						✓
RCLK10						✓						✓
RCLK11						✓						✓
RCLK12						✓						✓
RCLK13						✓						✓
RCLK14						✓						✓
RCLK15						✓						✓
RCLK16												
RCLK17												
RCLK18												
RCLK19												
RCLK20												
RCLK21												
RCLK22												
RCLK23												
RCLK24					✓						✓	
RCLK25					✓						✓	
RCLK26					✓						✓	
RCLK27					✓						✓	

Table 1–24. Stratix II GX Global and Regional Clock Outputs From PLLs (Part 3 of 3)

Clock Network	PLL Number and Type											
	EP2SGX30 Devices						EP2SGX60 through EP2SGX130 Devices *Notes (2)*, *(3)*, and *(4)*					
	Fast PLLs				Enhanced PLLs		Fast PLLs				Enhanced PLLs	
	1	2	3 *(1)*	4 *(1)*	5	6	7	8	9 *(1)*	10 *(1)*	11	12
RCLK28					✓						✓	
RCLK29					✓						✓	
RCLK30					✓						✓	
RCLK31					✓						✓	
External Clock Output												
PLL5_OUT[3..0]p/n					✓							
PLL6_OUT[3..0]p/n						✓						
PLL11_OUT[3..0]p/n											✓	
PLL12_OUT[3..0]p/n												✓

Notes to Table 1–24:

(1) PLLs 3, 4, 9, and 10 are not available in Stratix II GX devices.

(2) The EP2S60 device in the 1,020-pin package contains 12 PLLs. EP2S60 devices in the 484-pin and 672-pin packages contain fast PLLs 1–4 and enhanced PLLs 5 and 6.

(3) EP2S90 devices in the 1020-pin and 1508-pin packages contain 12 PLLs. EP2S90 devices in the 484-pin and 780-pin packages contain fast PLLs 1–4 and enhanced PLLs 5 and 6.

(4) EP2S130 devices in the 1020-pin and 1508-pin packages contain 12 PLLs. The EP2S130 device in the 780-pin package contains fast PLLs 1–4 and enhanced PLLs 5 and 6.

The fast PLLs also drive high-speed SERDES clocks for differential I/O interfacing. For information about these FPLLCLK pins, contact Altera Applications.

Figures 1–48 through 1–51 show the global and regional clock input and output connections from the Stratix II fast PLLs.

Figure 1–48. Stratix II Center Fast PLLs, Clock Pin and Logic Array Signal Connectivity to Global and Regional Clock Networks *Notes (1) and (2)*

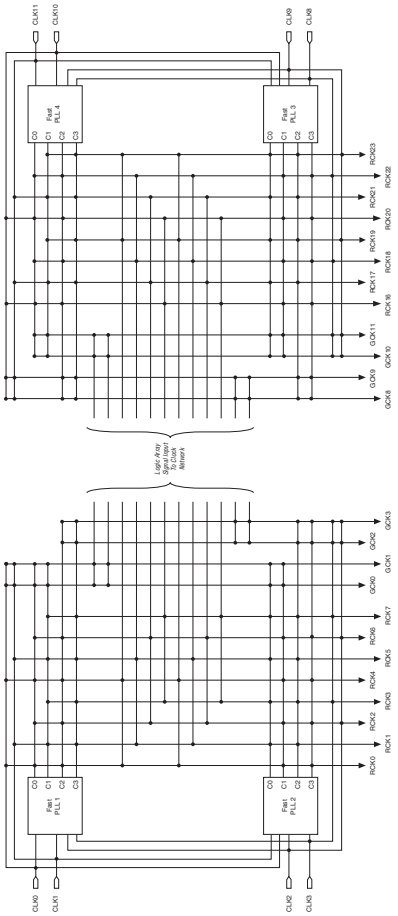

Notes to Figure 1–48:

(1) The redundant connection dots facilitate stitching of the clock networks to support the ability to drive two quadrants with the same clock.

(2) The global or regional clocks in a fast PLL's quadrant can drive the fast PLL input. The global or regional clock input can be driven by an output from another PLL, a pin-driven dedicated global or regional clock, or through a clock control block, provided the clock control block is fed by an output from another PLL or a pin-driven dedicated global or regional clock. An internally generated global signal cannot drive the PLL.

Figure 1–49. Stratix II GX Center Fast PLLs, Clock Pin and Logic Array Signal Connectivity to Global and Regional Clock Networks *Notes (1) and (2)*

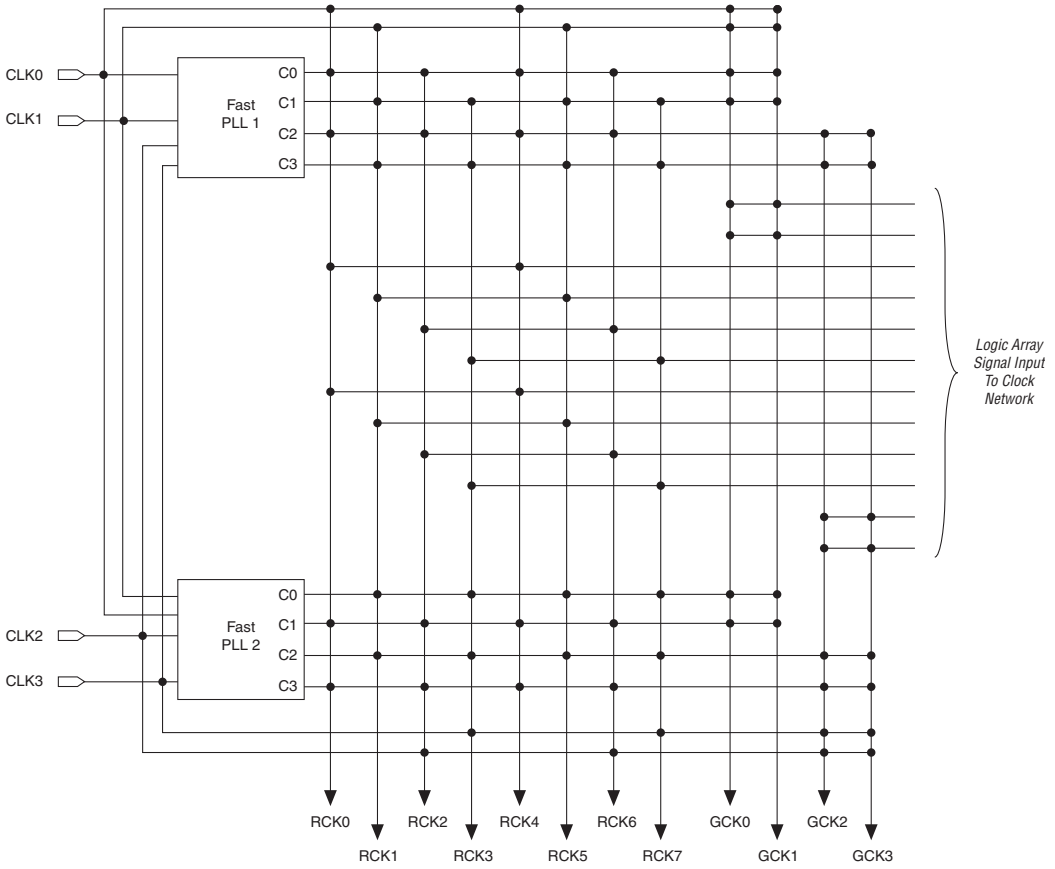

Notes to Figure 1–49:

(1) The redundant connection dots facilitate stitching of the clock networks to support the ability to drive two quadrants with the same clock.

(2) The global or regional clocks in a fast PLL's quadrant can drive the fast PLL input. The global or regional clock input can be driven by an output from another PLL, a pin-driven dedicated global or regional clock, or through a clock control block, provided the clock control block is fed by an output from another PLL or a pin-driven dedicated global or regional clock. An internally generated global signal cannot drive the PLL.

Figure 1–50. Stratix II Corner Fast PLLs, Clock Pin and Logic Array Signal Connectivity to Global and Regional Clock Networks *Note (1)*

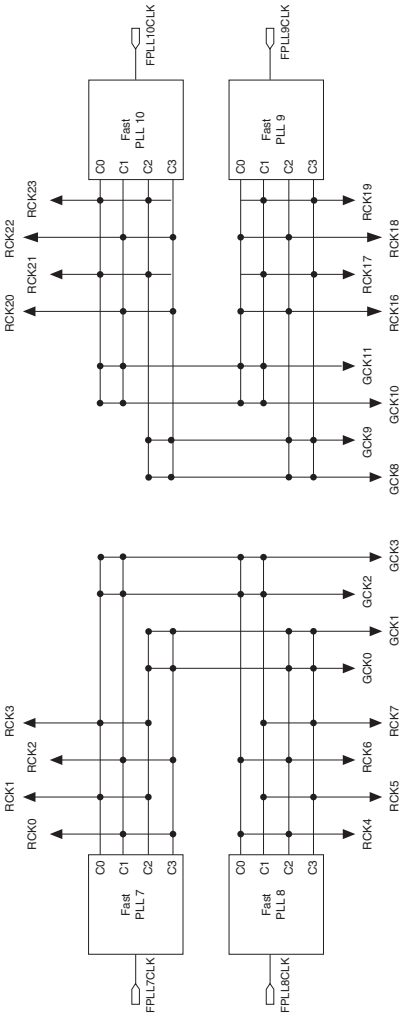

Note to Figure 1–50:

(1) The corner FPLLs can also be driven through the global or regional clock networks. The global or regional clock input can be driven by an output from another PLL, a pin-driven dedicated global or regional clock, or through a clock control block, provided the clock control block is fed by an output from another PLL or a pin-driven dedicated global or regional clock. An internally generated global signal cannot drive the PLL.

Figure 1–51. Stratix II GX Corner Fast PLLs, Clock Pin and Logic Array Signal Connectivity to Global and Regional Clock Networks *Note (1)*

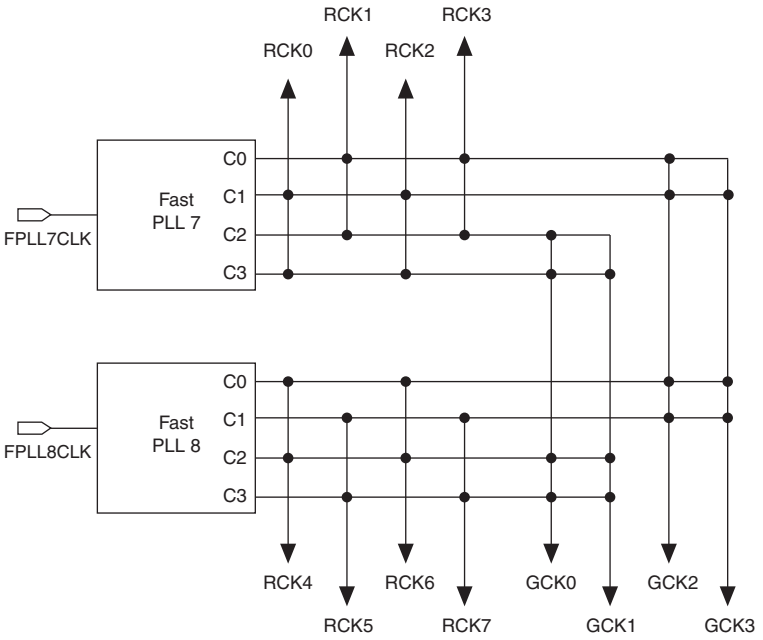

Note to Figure 1–51:

(1) The corner FPLLs can also be driven through the global or regional clock networks. The global or regional clock input can be driven by an output from another PLL, a pin-driven dedicated global or regional clock, or through a clock control block, provided the clock control block is fed by an output from another PLL or a pin-driven dedicated global or regional clock. An internally generated global signal cannot drive the PLL.

Clock Control Block

Each global and regional clock has its own clock control block. The control block has two functions:

- Clock source selection (dynamic selection for global clocks)
- Clock power-down (dynamic clock enable or disable)

Figures 1–52 and 1–53 show the global clock and regional clock select blocks, respectively.

Figure 1–52. Stratix II Global Clock Control Block

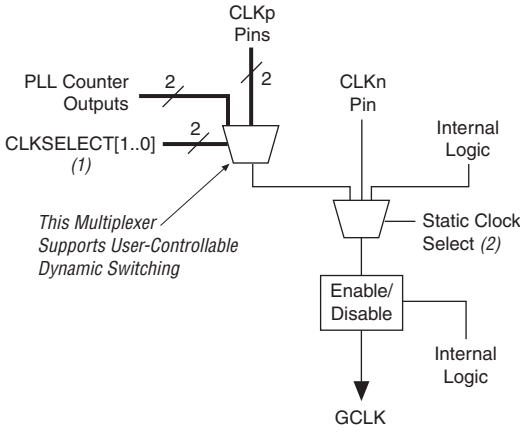

Notes to Figure 1–52:

(1) These clock select signals can only be dynamically controlled through internal logic when the device is operating in user mode.

(2) These clock select signals can only be set through a configuration file and cannot be dynamically controlled during user-mode operation.

Figure 1–53. Regional Clock Control Block

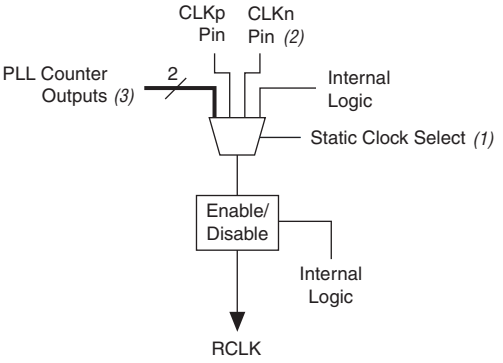

Notes to Figure 1–53:

(1) These clock select signals can only be dynamically controlled through a configuration file and cannot be dynamically controlled during user-mode operation.

(2) Only the CLK*n* pins on the top and bottom for the device feed to regional clock select blocks.

For the global clock select block, the clock source selection can be controlled either statically or dynamically. You have the option to statically select the clock source in configuration file generated by the Quartus II software, or you can control the selection dynamically by using internal logic to drive the multiplexer select inputs. When selecting statically, the clock source can be set to any of the inputs to the select multiplexer. When selecting the clock source dynamically, you can either select two PLL outputs (such as CLK0 or CLK1), or a combination of clock pins or PLL outputs.

When using the altclkctrl megafunction to implement clock source (dynamics) selection, the inputs from the clock pins feed the inclock[0..1] ports of the multiplexer, while the PLL outputs feed the inclock[2..3] ports. You can choose from among these inputs using the CLKSELECT[1..0] signal.

For the regional clock select block, the clock source selection can only be controlled statically using configuration bits. Any of the inputs to the clock select multiplexer can be set as the clock source.

The Stratix II and Stratix II GX clock networks can be disabled (powered down) by both static and dynamic approaches. When a clock net is powered down, all the logic fed by the clock net is in an off-state, thereby reducing the overall power consumption of the device.

The global and regional clock networks that are not used are automatically powered down through configuration bit settings in the configuration file (SRAM Object File (**.sof**) or Programmer Object File (**.pof**)) generated by the Quartus II software.

The dynamic clock enable or disable feature allows the internal logic to control power up or down synchronously on GCLK and RCLK nets, including dual-regional clock regions. This function is independent of the PLL and is applied directly on the clock network, as shown in Figure 1–52 on page 1–87 and Figure 1–53 on page 1–88.

The input clock sources and the clkena signals for the global and regional clock network multiplexers can be set through the Quartus II software using the altclkctrl megafunction. The dedicated external clock output pins can also be enabled or disabled using the altclkctrl megafunction. Figure 1–54 shows the external PLL output clock control block.

Figure 1–54. Stratix II External PLL Output Clock Control Block

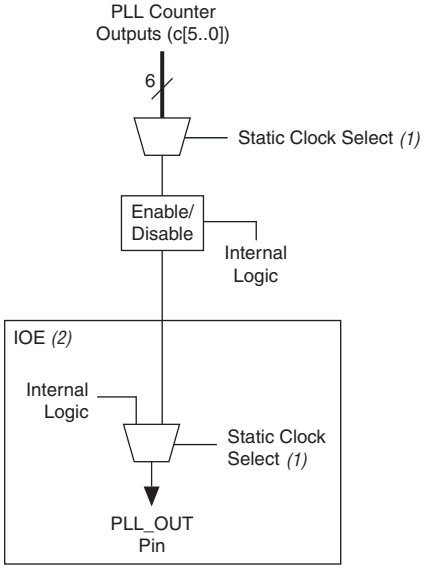

Notes to Figure 1–54:

(1) These clock select signals can only be set through a configuration file and cannot be dynamically controlled during user mode operation.

(2) The clock control block feeds to a multiplexer within the PLL_OUT pin's IOE. The PLL_OUT pin is a dual-purpose pin. Therefore, this multiplexer selects either an internal signal or the output of the clock control block.

clkena Signals

Figure 1–55 shows how clkena is implemented.

Figure 1–55. clkena Implementation

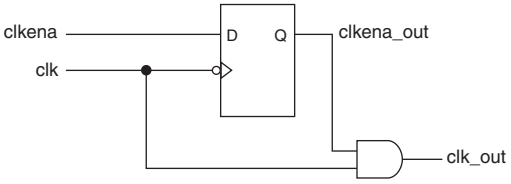

In Stratix II devices, the clkena signals are supported at the clock network level. This allows you to gate off the clock even when a PLL is not being used.

The clkena signals can also be used to control the dedicated external clocks from enhanced PLLs. Upon re-enabling, the PLL does not need a resynchronization or relock period unless the PLL is using external feedback mode. Figure 1–56 shows the waveform example for a clock output enable. clkena is synchronous to the falling edge of the counter output.

Figure 1–56. Clkena Signals

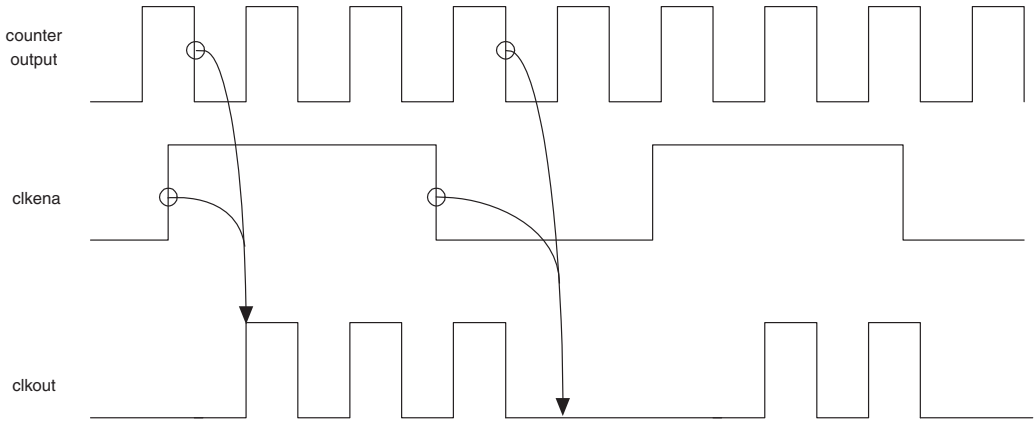

Note to Figure 1–56

(1) The clkena signals can be used to enable or disable the global and regional networks or the PLL_OUT pins.

The PLL can remain locked independent of the `clkena` signals since the loop-related counters are not affected. This feature is useful for applications that require a low power or sleep mode. Upon re-enabling, the PLL does not need a resynchronization or relock period. The `clkena` signal can also disable clock outputs if the system is not tolerant to frequency overshoot during resynchronization.

Conclusion

Stratix II and Stratix II GX device enhanced and fast PLLs provide you with complete control of device clocks and system timing. These PLLs are capable of offering flexible system-level clock management that was previously only available in discrete PLL devices. The embedded PLLs meet and exceed the features offered by these high-end discrete devices, reducing the need for other timing devices in the system.

Referenced Documents

This chapter references the following documents:

- *altpll Megafunction User Guide*
- *AN 367: Implementing PLL Reconfiguration in Stratix II Devices*
- *Configuring Stratix II and Stratix II GX Devices* chapter in volume 2 of the *Stratix II GX Device Handbook* (or the *Stratix II Device Handbook)*
- *DC & Switching Characteristics* chapter in volume 1 of the *Stratix II GX Device Handbook* (or the *Stratix II Device Handbook*)
- *Selectable I/O Standards in Stratix II and Stratix II GX Devices* chapter in volume 2 of the *Stratix II GX Device Handbook* (or the *Stratix II Device Handbook*)
- Verification, volume 3 of the *Quartus II Development Software Handbook*

Document Revision History

Table 1–25 shows the revision history for this chapter.

Table 1–25. Document Revision History (Part 1 of 2)

Date and Document Version	Changes Made	Summary of Changes
July 2009, v4.6	• Updated "Manual Override", "Manual Clock Switchover", and "Spread-Spectrum Clocking" sections. • Updated notes to Figure 1–20 and Figure 1–24.	• Both `inclk0` and `inclk1` must be running when the `clkswitch` signal goes high to initiate a manual clock switchover. • Updated the spread spectrum modulation frequency from (100 kHz–500 kHz) to (30 kHz–150 kHz).
January 2008, v4.5	Updated "External Clock Outputs" section.	—
	Added the "Referenced Documents" section.	—
	Minor text edits.	—
No change	For the *Stratix II GX Device Handbook* only: Formerly chapter 6. The chapter number changed due to the addition of the *Stratix II GX Dynamic Reconfiguration* chapter. No content change.	—
May 2007, v4.4	Updated Table 7–6.	—
	Updated notes to: • Figure 7–7 • Figure 7–47 • Figure 7–48 • Figure 7–49 • Figure 7–50 • Figure 7–51	—
	Updated the "Clock Source Control For Enhanced PLLs" section.	—
	Updated the "Clock Source Control for Fast PLLs" section.	—
February 2007 v4.3	Added "Document Revision History" section to this chapter.	—
	Deleted paragraph beginning with "The Stratix II GX PLLs have the ability..." in the "Enhanced Lock Detect Circuit" section.	—
April 2006, v4.2	Chapter updated as part of the *Stratix II Device Handbook* update.	—
No change	Formerly chapter 5. Chapter number change only due to chapter addition to Section I in February 2006; no content change.	—

Table 1–25. Document Revision History (Part 2 of 2)

Date and Document Version	Changes Made	Summary of Changes
December 2005, v4.1	Chapter updated as part of the *Stratix II Device Handbook* update.	—
October 2005 v4.0	Added chapter to the *Stratix II GX Device Handbook*.	—

Section II. Memory

This section provides information on the TriMatrix™ embedded memory blocks internal to Stratix® II devices and the supported external memory interfaces.

This section contains the following chapters:

- Chapter 2, TriMatrix Embedded Memory Blocks in Stratix II and Stratix II GX Devices
- Chapter 3, External Memory Interfaces in Stratix II and Stratix II GX Devices

Revision History

Refer to each chapter for its own specific revision history. For information on when each chapter was updated, refer to the Chapter Revision Dates section, which appears in the full handbook.

2. TriMatrix Embedded Memory Blocks in Stratix II and Stratix II GX Devices

SII52002-4.5

Introduction

Stratix® II and Stratix II GX devices feature the TriMatrix™ memory structure, consisting of three sizes of embedded RAM blocks that efficiently address the memory needs of FPGA designs.

TriMatrix memory includes 512-bit M512 blocks, 4-Kbit M4K blocks, and 512-Kbit M-RAM blocks, which are each configurable to support many features. TriMatrix memory provides up to 9 megabits of RAM at up to 550 MHz operation, and up to 16 terabits per second of total memory bandwidth per device. This chapter describes TriMatrix memory blocks, modes, and features.

TriMatrix Memory Overview

The TriMatrix architecture provides complex memory functions for different applications in FPGA designs. For example, M512 blocks are used for first-in first-out (FIFO) functions and clock domain buffering where memory bandwidth is critical; M4K blocks are ideal for applications requiring medium-sized memory, such as asynchronous transfer mode (ATM) cell processing; and M-RAM blocks are suitable for large buffering applications, such as internet protocol (IP) packet buffering and system cache.

The TriMatrix memory blocks support various memory configurations, including single-port, simple dual-port, true dual-port (also known as bidirectional dual-port), shift register, and read-only memory (ROM) modes. The TriMatrix memory architecture also includes advanced features and capabilities, such as parity-bit support, byte enable support, pack mode support, address clock enable support, mixed port width support, and mixed clock mode support.

When applied to input registers, the asynchronous clear signal for the TriMatrix embedded memory immediately clears the input registers. However, the output of the memory block does not show the effects until the next clock edge. When applied to output registers, the asynchronous clear signal clears the output registers and the effects are seen immediately.

Table 2–1 summarizes the features supported by the three sizes of TriMatrix memory.

Table 2–1. Summary of TriMatrix Memory Features

Feature	M512 Blocks	M4K Blocks	M-RAM Blocks
Maximum performance	500 MHz	550 MHz	420 MHz
Total RAM bits (including parity bits)	576	4,608	589,824
Configurations	512 × 1 256 × 2 128 × 4 64 × 8 64 × 9 32 × 16 32 × 18	4K × 1 2K × 2 1K × 4 512 × 8 512 × 9 256 × 16 256 × 18 128 × 32 128 × 36	64K × 8 64K × 9 32K × 16 32K × 18 16K × 32 8K × 64 8K × 72 4K × 128 4K × 144
Parity bits	✓	✓	✓
Byte enable	✓	✓	✓
Pack mode		✓	✓
Address clock enable		✓	✓
Single-port memory	✓	✓	✓
Simple dual-port memory	✓	✓	✓
True dual-port memory		✓	✓
Embedded shift register	✓	✓	
ROM	✓	✓	
FIFO buffer	✓	✓	✓
Simple dual-port mixed width support	✓	✓	✓
True dual-port mixed width support		✓	✓
Memory initialization file (**.mif**)	✓	✓	
Mixed-clock mode	✓	✓	✓
Power-up condition	Outputs cleared	Outputs cleared	Outputs unknown
Register clears	Output registers only	Output registers only	Output registers only
Same-port read-during-write	New data available at positive clock edge	New data available at positive clock edge	New data available at positive clock edge
Mixed-port read-during-write	Outputs set to unknown or old data	Outputs set to unknown or old data	Unknown output

Tables 2–2 and 2–3 show the capacity and distribution of the TriMatrix memory blocks in each Stratix II and Stratix II GX family member, respectively.

Table 2–2. TriMatrix Memory Capacity and Distribution in Stratix II Devices

Device	M512 Columns/Blocks	M4K Columns/Blocks	M-RAM Blocks	Total RAM Bits
EP2S15	4/104	3/78	0	419,328
EP2S30	6/202	4/144	1	1,369,728
EP2S60	7/329	5/255	2	2,544,192
EP2S90	8/488	6/408	4	4,520,448
EP2S130	9/699	7/609	6	6,747,840
EP2S180	11/930	8/768	9	9,383,040

Table 2–3. TriMatrix Memory Capacity and Distribution in Stratix II GX Devices

Device	M512 Columns/Blocks	M4K Columns/Blocks	M-RAM Blocks	Total RAM Bits
EP2SGX30C EP2SGX30D	6/202	4/144	1	1,369,728
EP2SGX60C EP2SGX60D EP2SGX60E	7/329	5/255	2	2,544,192
EP2SGX90E EP2SGX90F	8/488	6/408	4	4,520,448
EP2SGX130G	9/699	7/609	6	6,747,840

Parity Bit Support

All TriMatrix memory blocks (M512, M4K, and M-RAM) support one parity bit for each byte.

Parity bits add to the amount of memory in each random access memory (RAM) block. For example, the M512 block has 576 bits, 64 of which are optionally used for parity bit storage. The parity bit, along with logic implemented in adaptive logic modules (ALMs), implements parity checking for error detection to ensure data integrity. Parity-size data words can also be used for other purposes such as storing user-specified control bits.

Refer to the *Using Parity to Detect Memory Errors* white paper for more information on using the parity bit to detect memory errors.

Byte Enable Support

All TriMatrix memory blocks support byte enables that mask the input data so that only specific bytes, nibbles, or bits of data are written. The unwritten bytes or bits retain the previous written value. The write enable (`wren`) signals, along with the byte enable (`byteena`) signals, control the RAM blocks' write operations. The default value for the byte enable signals is high (enabled), in which case writing is controlled only by the write enable signals. There is no clear port to the byte enable registers.

M512 Blocks

M512 blocks support byte enables for data widths of 16 and 18 bits only. For memory block configurations with widths of less than two bytes (×16/×18), the byte-enable feature is not supported. For memory configurations less than two bytes wide, the write enable or clock enable signals can optionally be used to control the write operation. Table 2–4 summarizes the byte selection.

Table 2–4. Byte Enable for Stratix II and Stratix II GX M512 Blocks *Note (1)*

byteena[1..0]	data ×16	data ×18
[0] = 1	[7..0]	[8..0]
[1] = 1	[15..8]	[17..9]

Note to Table 2–4:
(1) Any combination of byte enables is possible.

M4K Blocks

M4K blocks support byte enables for any combination of data widths of 16, 18, 32, and 36 bits only. For memory block configurations with widths of less than two bytes (×16/×18), the byte-enable feature is not supported. For memory configurations less than two bytes wide, the write enable or clock enable signals can optionally be used to control the write operation.

Table 2–5 summarizes the byte selection.

Table 2–5. Byte Enable for Stratix II and Stratix II GX M4K Blocks *Note (1)*

byteena [3..0]	data ×16	data ×18	data ×32	data ×36
[0] = 1	[7..0]	[8..0]	[7..0]	[8..0]
[1] = 1	[15..8]	[17..9]	[15..8]	[17..9]
[2] = 1	-	-	[23..16]	[26..18]
[3] = 1	-	-	[31..24]	[35..27]

Note to Table 2–5:
(1) Any combination of byte enables is possible.

M-RAM Blocks

M-RAM blocks support byte enables for any combination of data widths of 16, 18, 32, 36, 64, and 72 bits. For memory block configurations with widths of less than two bytes (×16/×18), the byte-enable feature is not supported. In the ×128 and ×144 simple dual-port modes, the two sets of byte enable signals (`byteena_a` and `byteena_b`) combine to form the necessary 16 byte enables. In ×128 and ×144 modes, byte enables are only supported when using single clock mode. However, the Quartus II software can implement byte enables in other clocking modes for ×128 or ×144 widths but will use twice as many M-RAM resources. If clock enables are used in ×128 or ×144 mode, you must use the same clock enable setting for both the A and B ports. Table 2–6 summarizes the byte selection for M-RAM blocks.

Table 2–6. Byte Enable for Stratix II and Stratix II GX M-RAM Blocks *Note (1)*

byteena	data ×16	data ×18	data ×32	data ×36	data ×64	data ×72
[0] = 1	[7..0]	[8..0]	[7..0]	[8..0]	[7..0]	[8..0]
[1] = 1	[15..8]	[17..9]	[15..8]	[17..9]	[15..8]	[17..9]
[2] = 1	-	-	[23..16]	[26..18]	[23..16]	[26..18]
[3] = 1	-	-	[31..24]	[35..27]	[31..24]	[35..27]
[4] = 1	-	-	-	-	[39..32]	[44..36]
[5] = 1	-	-	-	-	[47..40]	[53..45]
[6] = 1	-	-	-	-	[55..48]	[62..54]
[7] = 1	-	-	-	-	[63..56]	[71..63]

Note to Table 2–6:
(1) Any combination of byte enables is possible.

Table 2–7 summarizes the byte selection for ×144 mode.

Table 2–7. Stratix II and Stratix II GX M-RAM Combined Byte Selection for ×144 Mode *Note (1)*

byteena	data ×128	data ×144
[0] = 1	[7..0]	[8..0]
[1] = 1	[15..8]	[17..9]
[2] = 1	[23..16]	[26..18]
[3] = 1	[31..24]	[35..27]
[4] = 1	[39..32]	[44..36]
[5] = 1	[47..40]	[53..45]
[6] = 1	[55..48]	[62..54]
[7] = 1	[63..56]	[71..63]
[8] = 1	[71..64]	[80..72]
[9] = 1	[79..72]	[89..73]
[10] = 1	[87..80]	[98..90]
[11] = 1	[95..88]	[107..99]
[12] = 1	[103..96]	[116..108]
[13] = 1	[111..104]	[125..117]
[14] = 1	[119..112]	[134..126]
[15] = 1	[127..120]	[143..135]

Note to Table 2–7:
(1) Any combination of byte enables is possible.

Byte Enable Functional Waveform

Figure 2–1 shows how the write enable (`wren`) and byte enable (`byteena`) signals control the operations of the RAM.

When a byte enable bit is de-asserted during a write cycle, the corresponding data byte output appears as a "don't care" or unknown value. When a byte enable bit is asserted during a write cycle, the corresponding data byte output will be the newly written data.

Figure 2–1. Stratix II and Stratix II GX Byte Enable Functional Waveform

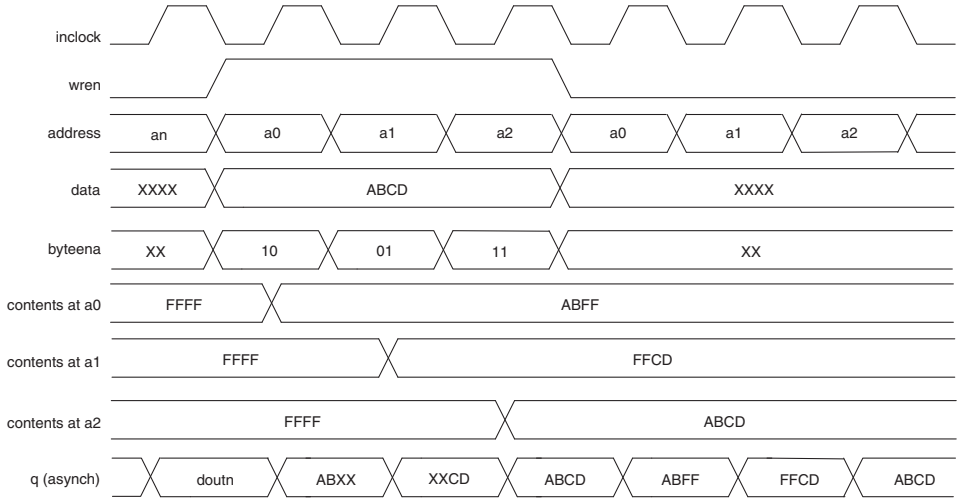

For more information about MRAM and byte enable for the Stratix II device family, refer to the *Stratix II FPGA Errata Sheet* at the Altera web site at www.altera.com.

Pack Mode Support

Stratix II and Stratix II GX M4K and M-RAM memory blocks support pack mode. In M4K and M-RAM memory blocks, two single-port memory blocks can be implemented in a single block under the following conditions:

- Each of the two independent block sizes is equal to or less than half of the M4K or M-RAM block size.
- Each of the single-port memory blocks is configured in single-clock mode.

Thus, each of the single-port memory blocks access up to half of the M4K or M-RAM memory resources such as clock, clock enables, and asynchronous clear signals.

Refer to "Single-Port Mode" on page 2–10 and "Single-Clock Mode" on page 2–28 for more information.

Address Clock Enable Support

Stratix II and Stratix II GX M4K and M-RAM memory blocks support address clock enable, which is used to hold the previous address value for as long as the signal is enabled. When the memory blocks are configured in dual-port mode, each port has its own independent address clock enable.

Figure 2–2 shows an address clock enable block diagram. Placed in the address register, the address signal output by the address register is fed back to the input of the register via a multiplexer. The multiplexer output is selected by the address clock enable (`addressstall`) signal. Address latching is enabled when the `addressstall` signal turns high. The output of the address register is then continuously fed into the input of the register; therefore, the address value can be held until the `addressstall` signal turns low.

Figure 2–2. Stratix II and Stratix II GX Address Clock Enable Block Diagram

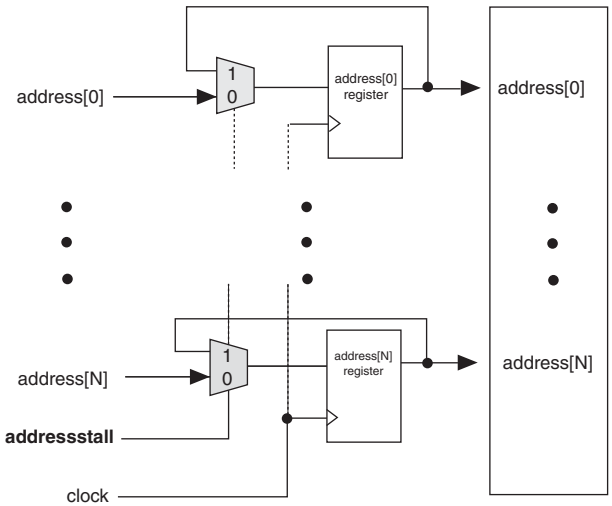

Address clock enable is typically used for cache memory applications, which require one port for read and another port for write. The default value for the address clock enable signals is low (disabled). Figures 2–3 and 2–4 show the address clock enable waveform during the read and write cycles, respectively.

Figure 2–3. Stratix II and Stratix II GX Address Clock Enable During Read Cycle Waveform

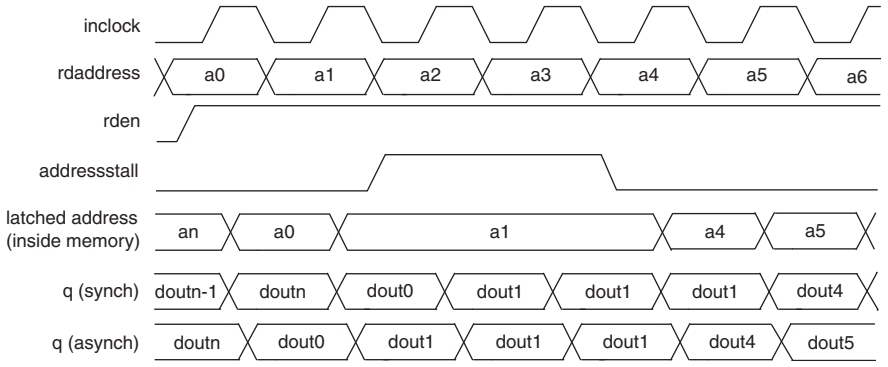

Figure 2–4. Stratix II and Stratix II GX Address Clock Enable During Write Cycle Waveform

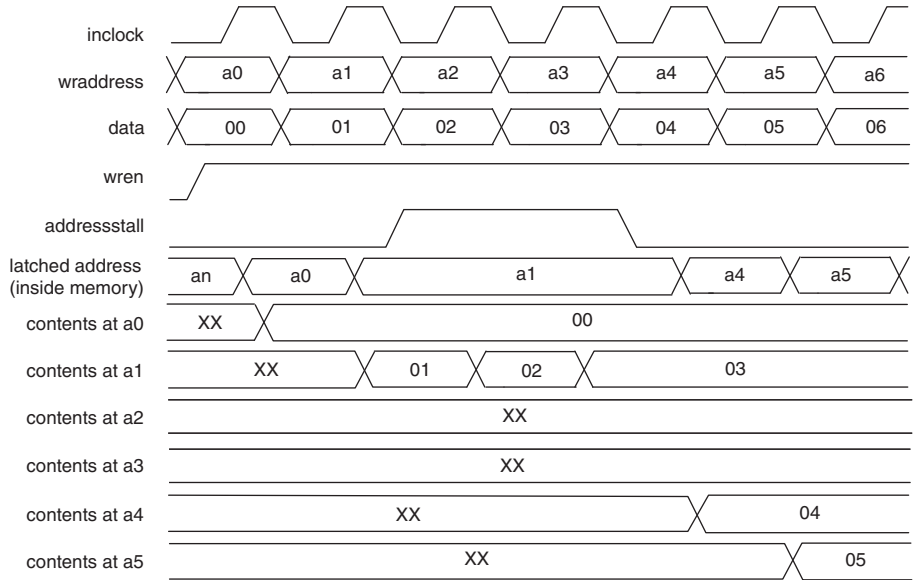

Memory Modes

Stratix II and Stratix II GX TriMatrix memory blocks include input registers that synchronize writes, and output registers to pipeline data to improve system performance. All TriMatrix memory blocks are fully synchronous, meaning that all inputs are registered, but outputs can be either registered or unregistered.

TriMatrix memory does not support asynchronous memory (unregistered inputs).

Depending on which TriMatrix memory block you use, the memory has various modes, including:

- Single-port
- Simple dual-port
- True dual-port (bidirectional dual-port)
- Shift-register
- ROM
- FIFO

Violating the setup or hold time on the memory block address registers could corrupt memory contents. This applies to both read and write operations.

Single-Port Mode

All TriMatrix memory blocks support the single-port mode that supports non-simultaneous read and write operations. Figure 2–5 shows the single-port memory configuration for TriMatrix memory.

Figure 2–5. Single-Port Memory *Note (1)*

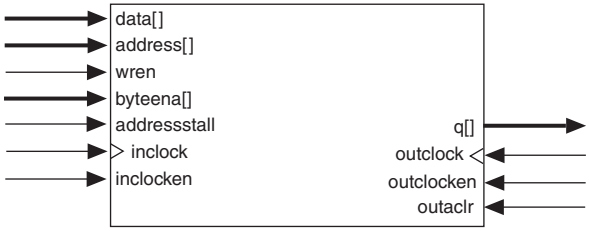

Note to Figure 2–5:
(1) Two single-port memory blocks can be implemented in a single M4K or M-RAM block.

M4K and M-RAM memory blocks can also be halved and used for two independent single-port RAM blocks. The Altera® Quartus® II software automatically uses this single-port memory packing when running low on memory resources. To force two single-port memories into one M4K or M-RAM block, first ensure that each of the two independent RAM blocks is equal to or less than half the size of the M4K or M-RAM block. Secondly, assign both single-port RAMs to the same M4K or M-RAM block.

In single-port RAM configuration, the outputs can only be in read-during-write mode, which means that during the write operation, data written to the RAM flows through to the RAM outputs. When the output registers are bypassed, the new data is available on the rising edge of the same clock cycle on which it was written. Refer to "Read-During-Write Operation at the Same Address" on page 2–33 for more information about read-during-write mode. Table 2–8 shows the port width configurations for TriMatrix blocks in single-port mode.

Table 2–8. Stratix II and Stratix II GX Port Width Configurations for M512, M4K, and M-RAM Blocks (Single-Port Mode)

	M512 Blocks	M4K Blocks	M-RAM Blocks
Port Width Configurations	512 × 1 256 × 2 128 × 4 64 × 8 64 × 9 32 × 16 32 × 18	4K × 1 2K × 2 1K × 4 512 × 8 512 × 9 256 × 16 256 × 18 128 × 32 128 × 36	64K × 8 64K × 9 32K × 16 32K × 18 16K × 32 16K × 36 8K × 64 8K × 72 4K × 128 4K × 144

Figure 2–6 shows timing waveforms for read and write operations in single-port mode.

Figure 2–6. Stratix II and Stratix II GX Single-Port Timing Waveforms

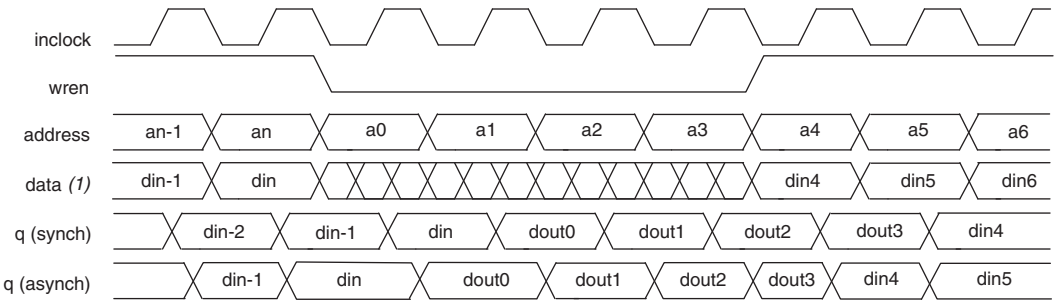

Note to Figure 2–6:
(1) The crosses in the `data` waveform during read mean "don't care."

Simple Dual-Port Mode

All TriMatrix memory blocks support simple dual-port mode which supports a simultaneous read and write operation. Figure 2–7 shows the simple dual-port memory configuration for TriMatrix memory.

Figure 2–7. Stratix II and Stratix II GX Simple Dual-Port Memory *Note (1)*

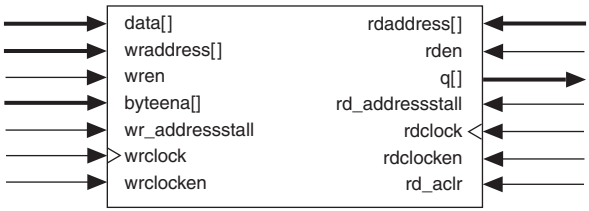

Note to Figure 2–7:

(1) Simple dual-port RAM supports input/output clock mode in addition to the read/write clock mode shown.

TriMatrix memory supports mixed-width configurations, allowing different read and write port widths. Tables 2–9 through 2–11 show the mixed width configurations for the M512, M4K, and M-RAM blocks, respectively.

Table 2–9. Stratix II and Stratix II GX M512 Block Mixed-Width Configurations (Simple Dual-Port Mode)

Read Port	Write Port						
	512 × 1	256 × 2	128 × 4	64 × 8	32 × 16	64 × 9	32 × 18
512 × 1	✓	✓	✓	✓	✓		
256 × 2	✓	✓	✓	✓	✓		
128 × 4	✓	✓	✓	✓	✓		
64 × 8	✓	✓	✓	✓	✓		
32 × 16	✓	✓	✓	✓	✓		
64 × 9						✓	✓
32 × 18						✓	✓

Table 2–10. Stratix II and Stratix II GX M4K Block Mixed-Width Configurations (Simple Dual-Port Mode)

Read Port	Write Port								
	4K × 1	2K × 2	1K × 4	512 × 8	256 × 16	128 × 32	512 × 9	256 × 18	128 × 36
4K × 1	✓	✓	✓	✓	✓	✓			
2K × 2	✓	✓	✓	✓	✓	✓			
1K × 4	✓	✓	✓	✓	✓	✓			
512 × 8	✓	✓	✓	✓	✓	✓			
256 × 16	✓	✓	✓	✓	✓	✓			
128 × 32	✓	✓	✓	✓	✓	✓			
512 × 9							✓	✓	✓
256 × 18							✓	✓	✓
128 × 36							✓	✓	✓

Table 2–11. Stratix II and Stratix II GX M-RAM Block Mixed-Width Configurations (Simple Dual-Port Mode)

Read Port	Write Port				
	64K × 9	32K × 18	18K × 36	8K × 72	4K × 144
64K × 9	✓	✓	✓	✓	
32K × 18	✓	✓	✓	✓	
18K × 36	✓	✓	✓	✓	
8K × 72	✓	✓	✓	✓	
4K × 144					✓

In simple dual-port mode, M512 and M4K blocks have one write enable and one read enable signal. However, M-RAM blocks contain only a write-enable signal, which is held high to perform a write operation. M-RAM blocks are always enabled for read operations. If the read address and the write address select the same address location during a write operation, M-RAM block output is unknown.

TriMatrix memory blocks do not support a clear port on the write enable and read enable registers. When the read enable is deactivated, the current data is retained at the output ports. If the read enable is activated during a write operation with the same address location selected, the simple dual-port RAM output is either unknown or can be set to output the old data stored at the memory address. Refer to "Read-During-Write Operation at the Same Address" on page 2–33 for more information. Figure 2–8 shows timing waveforms for read and write operations in simple dual-port mode.

Figure 2–8. Stratix II and Stratix II GX Simple Dual-Port Timing Waveforms

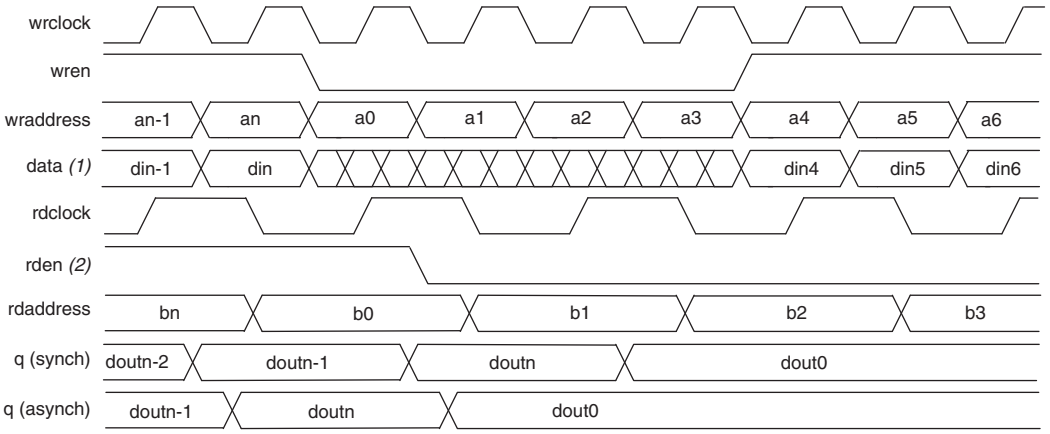

Notes to Figure 2–8:

(1) The crosses in the `data` waveform during read mean "don't care."

(2) The read enable `rden` signal is not available in M-RAM blocks. The M-RAM block in simple dual-port mode always reads out the data stored at the current read address location.

True Dual-Port Mode

Stratix II and Stratix II GX M4K and M-RAM memory blocks support the true dual-port mode. True dual-port mode supports any combination of two-port operations: two reads, two writes, or one read and one write at two different clock frequencies. Figure 2–9 shows Stratix II and Stratix II GX true dual-port memory configuration.

Figure 2–9. Stratix II and Stratix II GX True Dual-Port Memory *Note (1)*

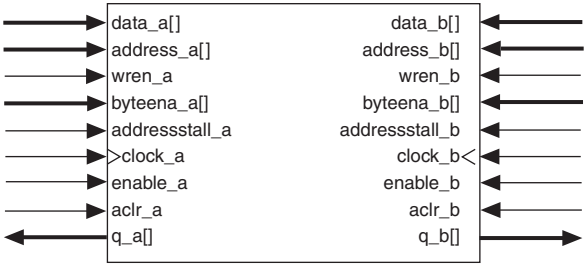

Note to Figure 2–9:

(1) True dual-port memory supports input/output clock mode in addition to the independent clock mode shown.

The widest bit configuration of the M4K and M-RAM blocks in true dual-port mode is as follows:

- 256 × 16-bit (×18-bit with parity) (M4K)
- 8K × 64-bit (×72-bit with parity) (M-RAM)

The 128 × 32-bit (×36-bit with parity) configuration of the M4K block and the 4K × 128-bit (×144-bit with parity) configuration of the M-RAM block are unavailable because the number of output drivers is equivalent to the maximum bit width of the respective memory block. Because true dual-port RAM has outputs on two ports, the maximum width of the true dual-port RAM equals half of the total number of output drivers. Table 2–12 lists the possible M4K block mixed-port width configurations.

Table 2–12. Stratix II and Stratix II GX M4K Block Mixed-Port Width Configurations (True Dual-Port)

Read Port	Write Port						
	4K × 1	2K × 2	1K × 4	512 × 8	256 × 16	512 × 9	256 × 18
4K × 1	✓	✓	✓	✓	✓		
2K × 2	✓	✓	✓	✓	✓		
1K × 4	✓	✓	✓	✓	✓		
512 × 8	✓	✓	✓	✓	✓		
256 × 16	✓	✓	✓	✓	✓		
512 × 9						✓	✓
256 × 18						✓	✓

Table 2–13 lists the possible M-RAM block mixed-port width configurations.

Table 2–13. Stratix II and Stratix II GX M-RAM Block Mixed-Port Width Configurations (True Dual-Port)

Read Port	Write Port			
	64K × 9	32K × 18	18K × 36	8K × 72
64K × 9	✓	✓	✓	✓
32K × 18	✓	✓	✓	✓
18K × 36	✓	✓	✓	✓
8K × 72	✓	✓	✓	✓

In true dual-port configuration, the RAM outputs can only be configured for read-during-write mode. This means that during write operation, data being written to the A or B port of the RAM flows through to the A or B outputs, respectively. When the output registers are bypassed, the new data is available on the rising edge of the same clock cycle on which it was written. Refer to "Read-During-Write Operation at the Same Address" on page 2–33 for waveforms and information on mixed-port read-during-write mode.

Potential write contentions must be resolved external to the RAM because writing to the same address location at both ports results in unknown data storage at that location. For a valid write operation to the same address of the M-RAM block, the rising edge of the write clock for port A must occur following the maximum write cycle time interval after the rising edge of the write clock for port B. Data is written on the rising edge of the write clock for the M-RAM block.

Because data is written into the M512 and M4K blocks at the falling edge of the write clock, the rising edge of the write clock for port A should occur following half of the maximum write cycle time interval after the falling edge of the write clock for port B. If this timing is not met, the data stored in that particular address will be invalid.



Refer to the *Stratix II Device Family Data Sheet* (volume 1) of the *Stratix II Device Handbook* or the *Stratix II GX Device Family Data Sheet* (volume 1) of the *Stratix II GX Device Handbook* for the maximum synchronous write cycle time.

Figure 2–10 shows true dual-port timing waveforms for the write operation at port A and the read operation at port B.

Figure 2–10. Stratix II and Stratix II GX True Dual-Port Timing Waveforms

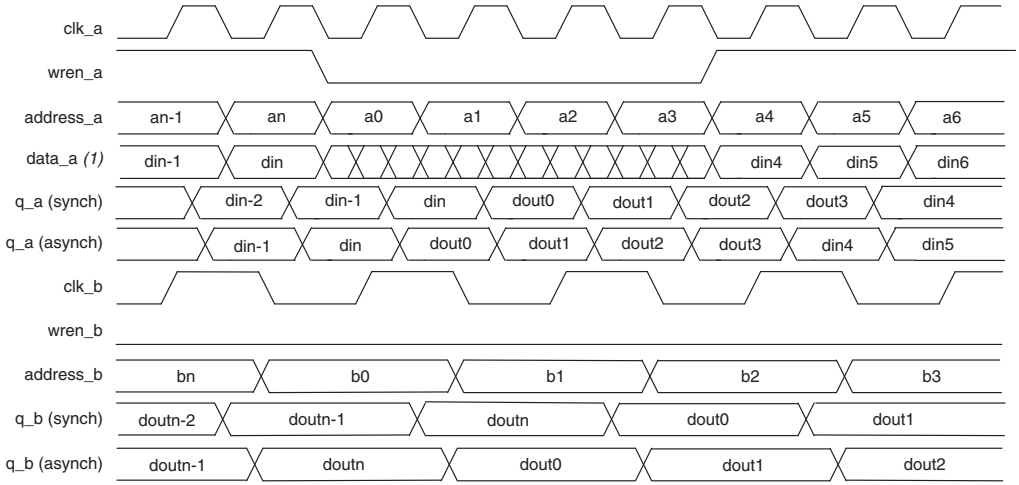

Note to Figure 2–10:
(1) The crosses in the `data_a` waveform during write mean "don't care."

Shift-Register Mode

All Stratix II memory blocks support the shift register mode.

Embedded memory block configurations can implement shift registers for digital signal processing (DSP) applications, such as finite impulse response (FIR) filters, pseudo-random number generators, multi-channel filtering, and auto-correlation and cross-correlation functions. These and other DSP applications require local data storage, traditionally implemented with standard flip-flops that quickly exhaust many logic cells for large shift registers. A more efficient alternative is to use embedded memory as a shift-register block, which saves logic cell and routing resources.

The size of a (w × m × n) shift register is determined by the input data width (w), the length of the taps (m), and the number of taps (n), and must be less than or equal to the maximum number of memory bits in the respective block: 576 bits for the M512 block, 4,608 bits for the M4K block, and 589,824 bits for the MRAM block. In addition, the size of w × n must be less than or equal to the maximum width of the respective block: 18

bits for the M512 block, 36 bits for the M4K block, and 144 bits for the MRAM block. If a larger shift register is required, the memory blocks can be cascaded.

In M512 and M4K blocks, data is written into each address location at the falling edge of the clock and read from the address at the rising edge of the clock. The shift-register mode logic automatically controls the positive and negative edge clocking to shift the data in one clock cycle. The MRAM block performs reads and writes on the rising edge. Figure 2–11 shows the TriMatrix memory block in the shift-register mode.

Figure 2–11. Stratix II and Stratix II GX Shift-Register Memory Configuration

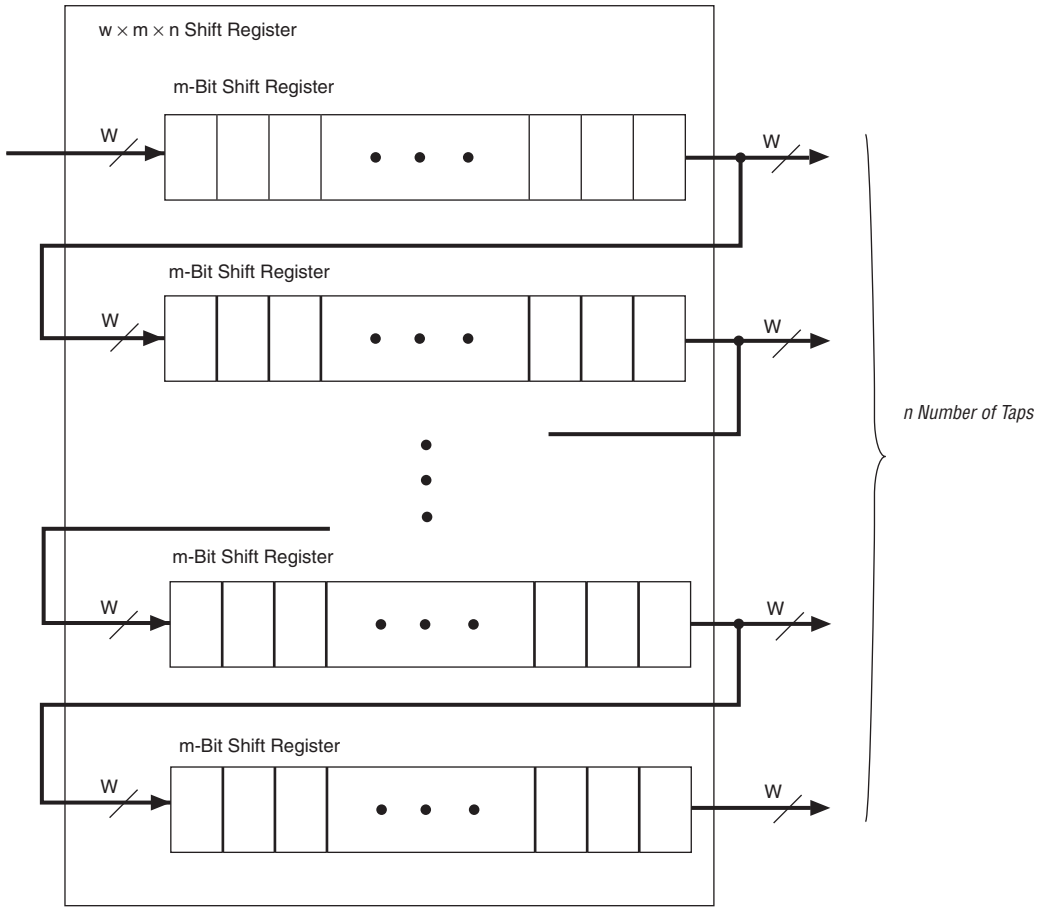

ROM Mode

M512 and M4K memory blocks support ROM mode. A memory initialization file (**.mif**) initializes the ROM contents of these blocks. The address lines of the ROM are registered. The outputs can be registered or unregistered. The ROM read operation is identical to the read operation in the single-port RAM configuration.

FIFO Buffers Mode

TriMatrix memory blocks support the FIFO mode. M512 memory blocks are ideal for designs with many shallow FIFO buffers. All memory configurations have synchronous inputs; however, the FIFO buffer outputs are always combinational. Simultaneous read and write from an empty FIFO buffer is not supported.

Refer to the *Single- and Dual-Clock FIFO Megafunctions User Guide* and *FIFO Partitioner Megafunction User Guide* for more information on FIFO buffers.

Clock Modes

Depending on which TriMatrix memory mode is selected, the following clock modes are available:

- Independent
- Input/output
- Read/write
- Single-clock

Table 2–14 shows these clock modes supported by all TriMatrix blocks when configured as respective memory modes.

Table 2–14. Stratix II and Stratix II GX TriMatrix Memory Clock Modes

Clocking Modes	True Dual-Port Mode	Simple Dual-Port Mode	Single-Port Mode
Independent	✓		
Input/output	✓	✓	✓
Read/write		✓	
Single clock	✓	✓	✓

Independent Clock Mode

The TriMatrix memory blocks can implement independent clock mode for true dual-port memory. In this mode, a separate clock is available for each port (A and B). Clock A controls all registers on the port A side, while clock B controls all registers on the port B side. Each port also supports independent clock enables for port A and B registers. Asynchronous clear signals for the registers, however, are supported.

Figure 2–12 shows a TriMatrix memory block in independent clock mode.

Figure 2–12. Stratix II and Stratix II GX TriMatrix Memory Block in Independent Clock Mode *Note (1)*

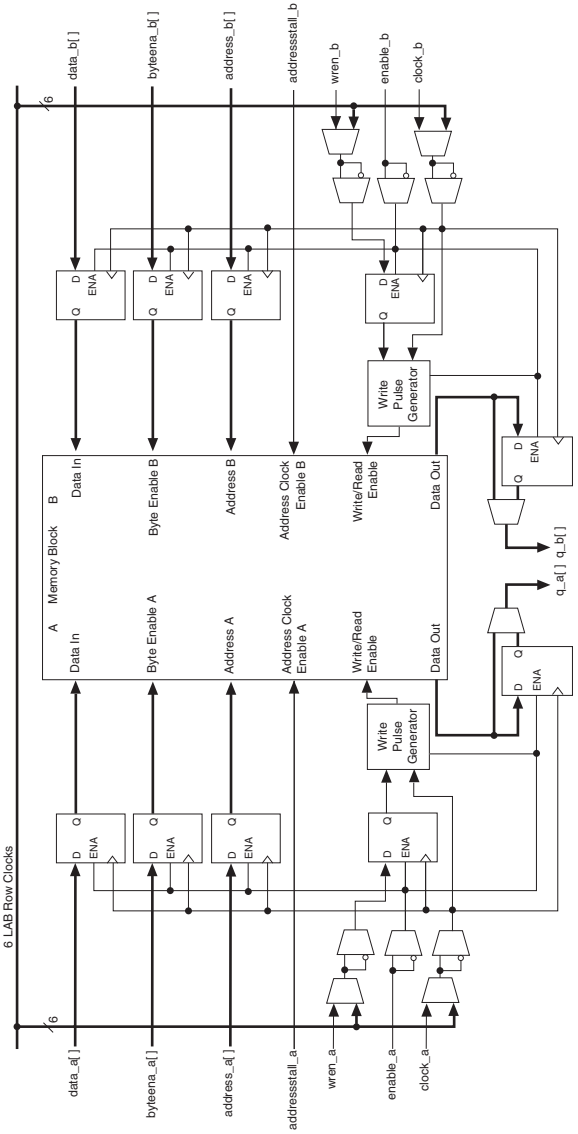

Note to Figure 2–12:

(1) Violating the setup or hold time on the memory block address registers could corrupt the memory contents. This applies to both read and write operations.

Input/Output Clock Mode

Stratix II and Stratix II GX TriMatrix memory blocks can implement input/output clock mode for true and simple dual-port memory. On each of the two ports, A and B, one clock controls all registers for the following inputs into the memory block: data input, write enable, and address. The other clock controls the blocks' data output registers. Each memory block port also supports independent clock enables for input and output registers. Asynchronous clear signals for the registers, however, are not supported.

Figures 2–13 through 2–15 show the memory block in input/output clock mode for true dual-port, simple dual-port, and single-port modes, respectively.

Figure 2–13. Stratix II and Stratix II GX Input/Output Clock Mode in True Dual-Port Mode *Note (1)*

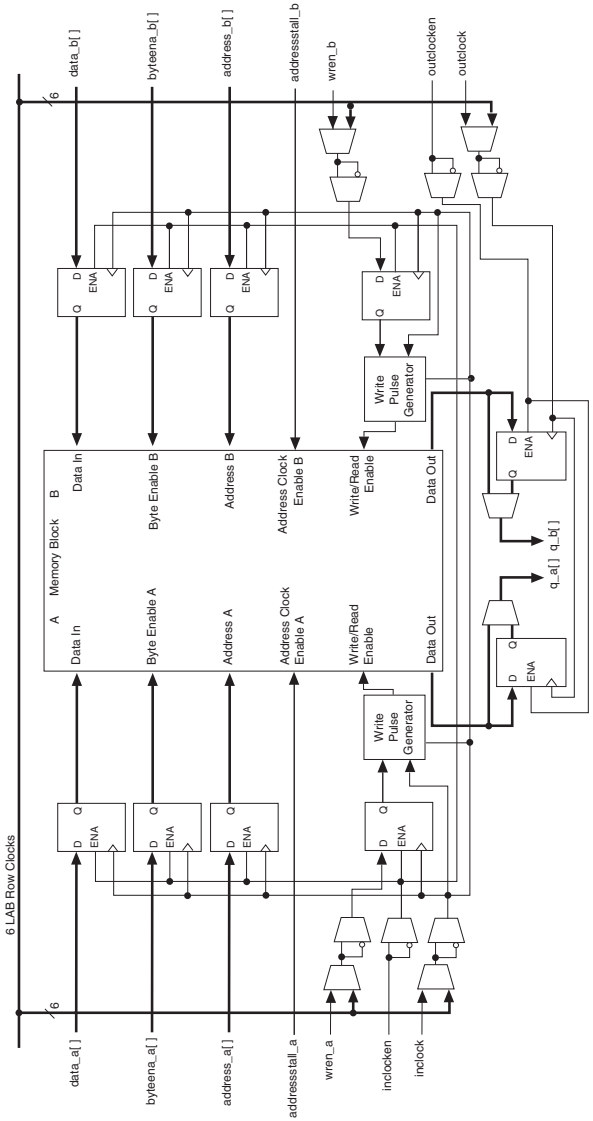

Note to Figure 2–13:

(1) Violating the setup or hold time on the memory block address registers could corrupt the memory contents. This applies to both read and write operations.

Figure 2–14. Stratix II and Stratix II GX Input/Output Clock Mode in Simple Dual-Port Mode *Note (1)*

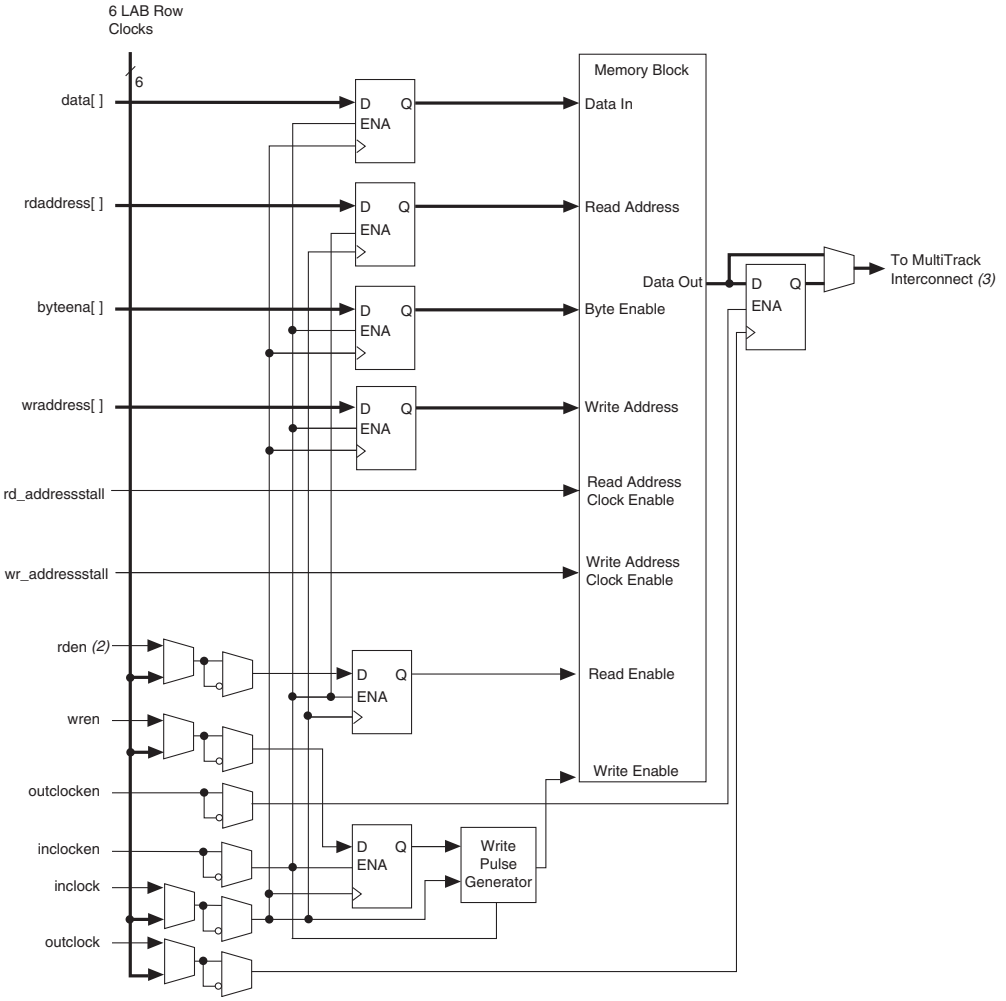

Notes to Figure 2–14:

(1) Violating the setup or hold time on the memory block address registers could corrupt the memory contents. This applies to both read and write operations.

(2) The read enable `rden` signal is not available in the M-RAM block. An M-RAM block in simple dual-port mode is always reading out the data stored at the current read address location.

(3) Refer to the *Stratix II Device Family Data Sheet* (volume 1) of the *Stratix II Device Handbook* or the *Stratix II GX Device Family Data Sheet* (volume 1) of the *Stratix II GX Device Handbook* for more information on the MultiTrack™ interconnect.

Figure 2–15. Stratix II and Stratix II GX Input/Output Clock Mode in Single-Port Mode *Note (1)*

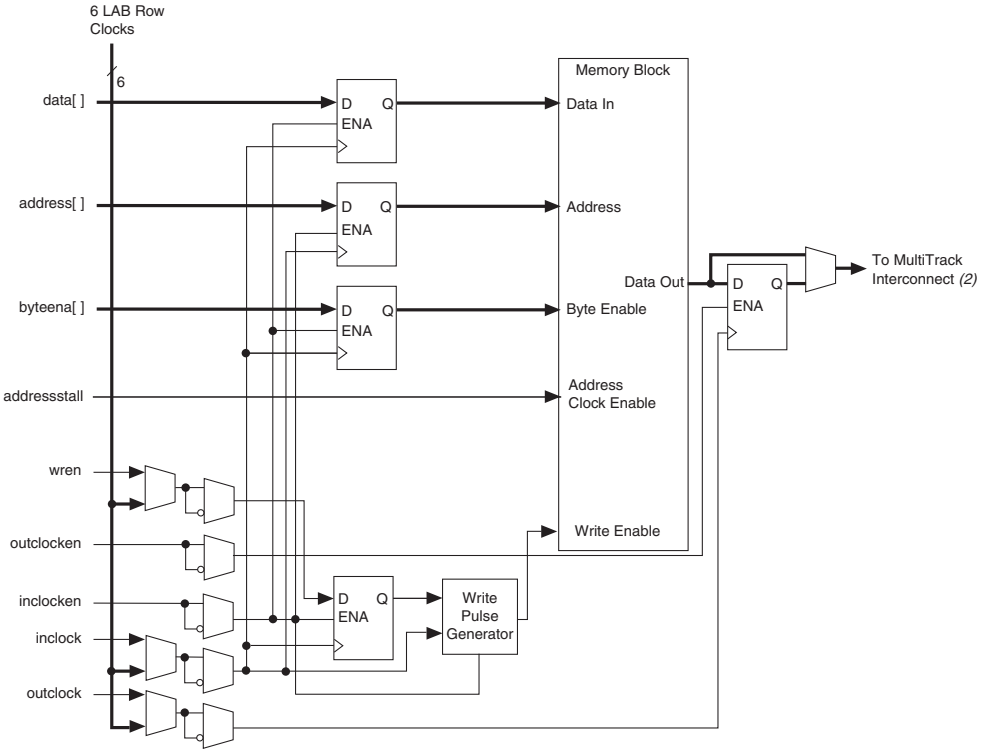

Notes to Figure 2–15:

(1) Violating the setup or hold time on the memory block address registers could corrupt the memory contents. This applies to both read and write operations.

(2) Refer to the *Stratix II Device Family Data Sheet* (volume 1) of the *Stratix II Device Handbook* or the *Stratix II GX Device Family Data Sheet* (volume 1) of the *Stratix II GX Device Handbook* for more information on the MultiTrack interconnect.

Read/Write Clock Mode

Stratix II and Stratix II GX TriMatrix memory blocks can implement read/write clock mode for simple dual-port memory. This mode uses up to two clocks. The write clock controls the blocks' data inputs, write address, and write enable signals. The read clock controls the data output, read address, and read enable signals. The memory blocks support independent clock enables for each clock for the read- and write-side registers. Asynchronous clear signals for the registers, however, are not supported. Figure 2–16 shows a memory block in read/write clock mode.

Figure 2–16. Stratix II and Stratix II GX Read/Write Clock Mode *Note (1)*

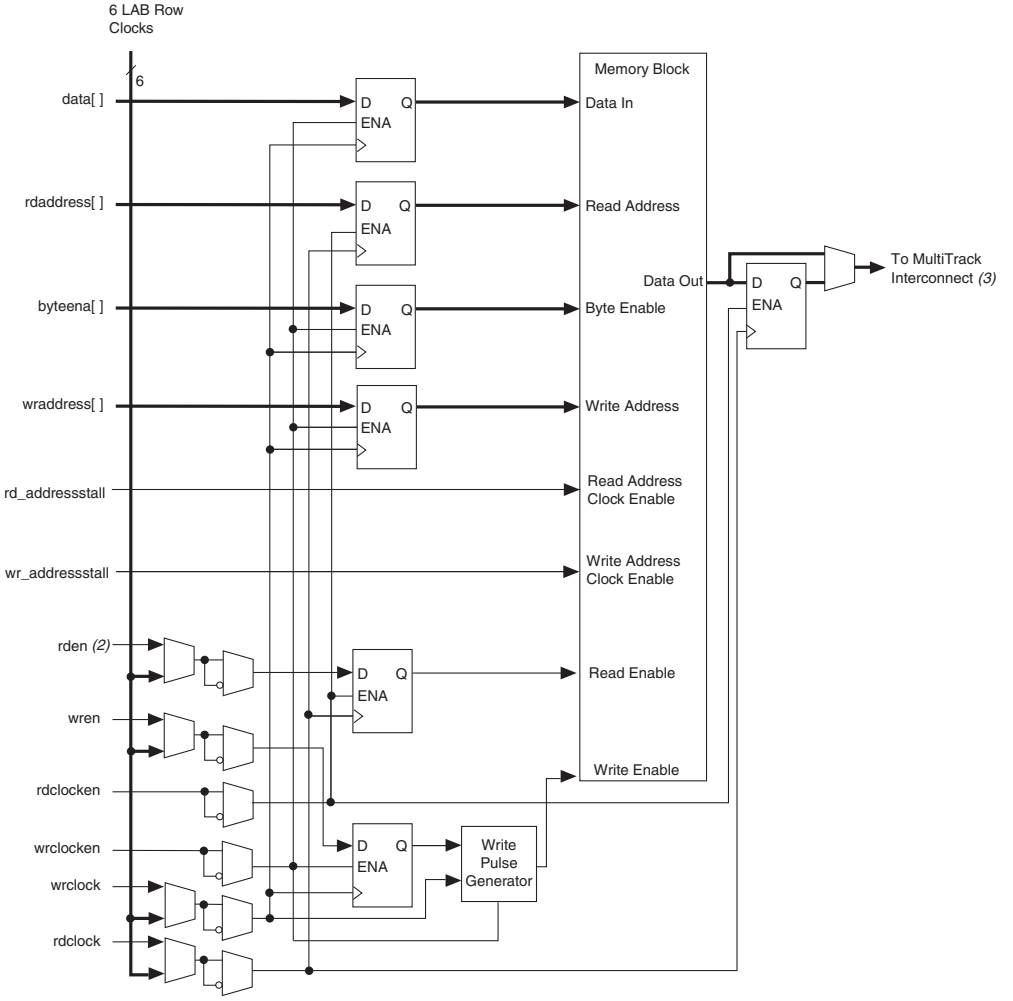

Notes to Figure 2–16:

(1) Violating the setup or hold time on the memory block address registers could corrupt the memory contents. This applies to both read and write operations.

(2) The read enable `rden` signal is not available in the M-RAM block. An M-RAM block in simple dual-port mode is always reading the data stored at the current read address location.

(3) Refer to the *Stratix II Device Family Data Sheet* (volume 1) of the *Stratix II Device Handbook* or the *Stratix II GX Device Family Data Sheet* (volume 1) of the *Stratix II GX Device Handbook* for more information on the MultiTrack interconnect.

Single-Clock Mode

Stratix II and Stratix II GX TriMatrix memory blocks implement single-clock mode for true dual-port, simple dual-port, and single-port memory. In this mode, a single clock, together with clock enable, is used to control all registers of the memory block. Asynchronous clear signals for the registers, however, are not supported. Figures 2–17 through 2–19 show the memory block in single-clock mode for true dual-port, simple dual-port, and single-port modes, respectively.

Figure 2–17. Stratix II and Stratix II GX Single-Clock Mode in True Dual-Port Mode *Note (1)*

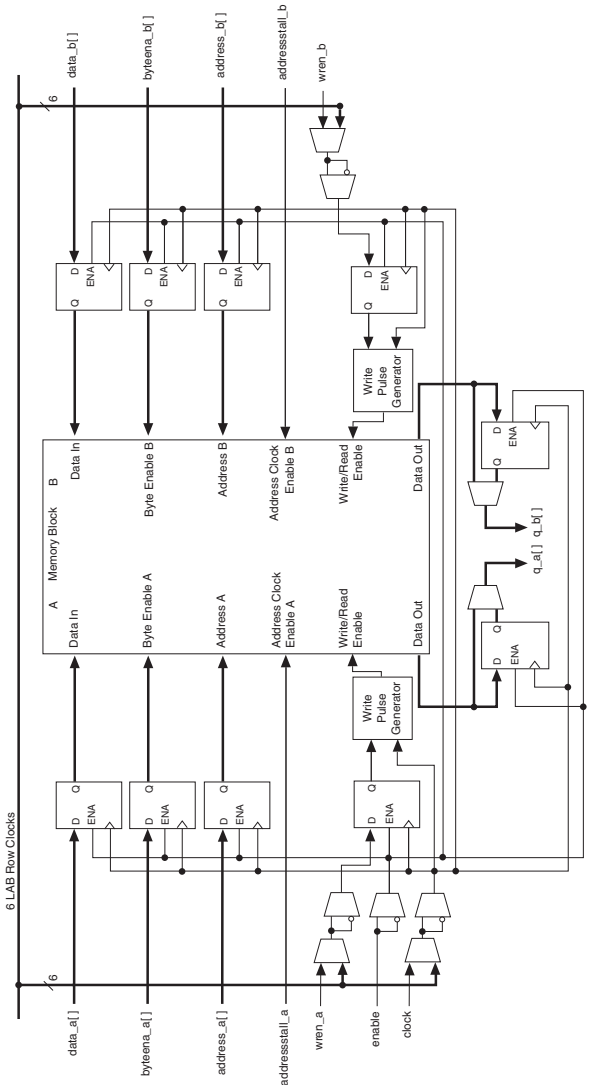

Note to Figure 2–17:

(1) Violating the setup or hold time on the memory block address registers could corrupt the memory contents. This applies to both read and write operations.

Figure 2–18. Stratix II andStratix II GX Single-Clock Mode in Simple Dual-Port Mode *Note (1)*

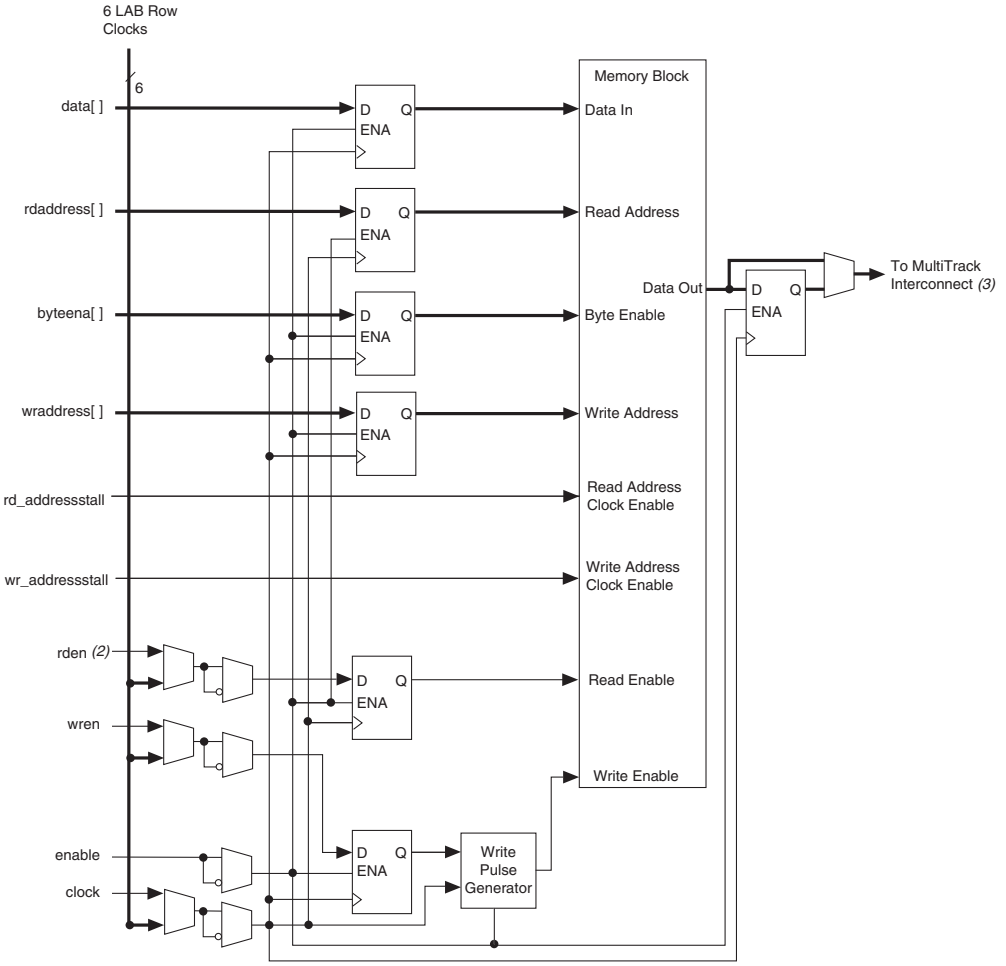

Notes to Figure 2–18:

(1) Violating the setup or hold time on the memory block address registers could corrupt the memory contents. This applies to both read and write operations.

(2) The read enable `rden` signal is not available in the M-RAM block. An M-RAM block in simple dual-port mode is always reading the data stored at the current read address location.

(3) Refer to the *Stratix II Device Family Data Sheet* (volume 1) of the *Stratix II Device Handbook* or the *Stratix II GX Device Family Data Sheet* (volume 1) of the *Stratix II GX Device Handbook* for more information on the MultiTrack interconnect.

Figure 2–19. Stratix II and Stratix II GX Single-Clock Mode in Single-Port Mode *Note (1)*

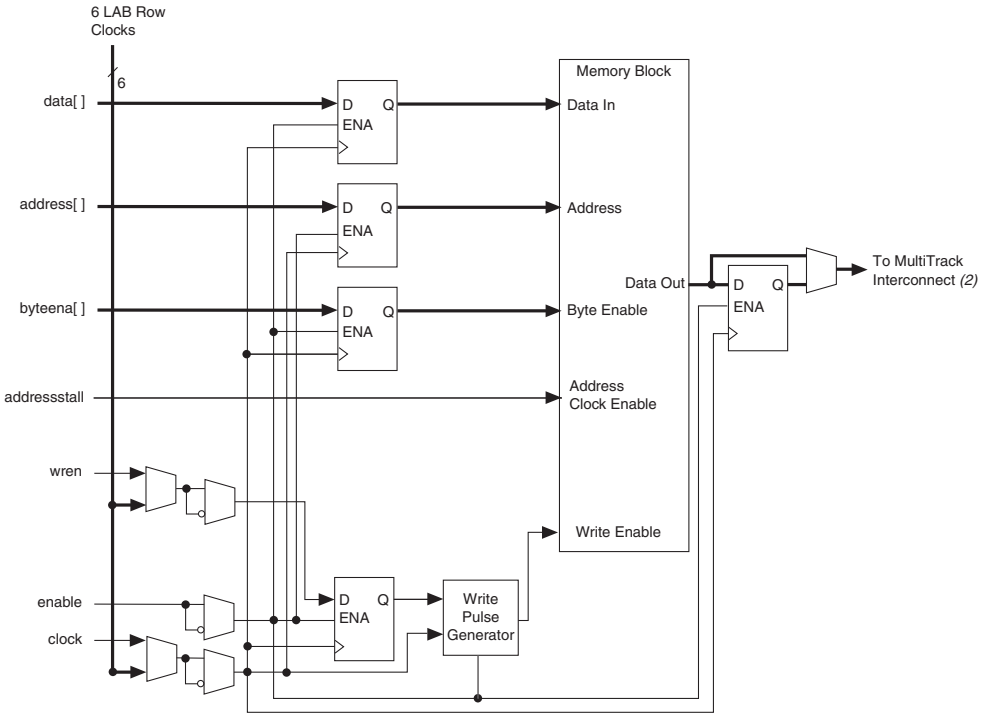

Notes to Figure 2–19:

(1) Violating the setup or hold time on the memory block address registers could corrupt the memory contents. This applies to both read and write operations.

(2) Refer to the *Stratix II Device Family Data Sheet* (volume 1) of the *Stratix II Device Handbook* or the *Stratix II GX Device Family Data Sheet* (volume 1) of the *Stratix II GX Device Handbook* for more information on the MultiTrack interconnect.

Designing With TriMatrix Memory

When instantiating TriMatrix memory, it is important to understand the features that set it apart from other memory architectures. The following sections describe the unique attributes and functionality of TriMatrix memory.

Selecting TriMatrix Memory Blocks

The Quartus II software automatically partitions user-defined memory into embedded memory blocks using the most efficient size combinations. The memory can also be manually assigned to a specific block size or a mixture of block sizes. Table 2–1 on page 2–2 is a guide for selecting a TriMatrix memory block size based on supported features.



Refer to *AN 207: TriMatrix Memory Selection Using the Quartus II Software* for more information on selecting the appropriate memory block.

Synchronous and Pseudo-Asynchronous Modes

The TriMatrix memory architecture implements synchronous RAM by registering the input and output signals to the RAM block. The inputs to all TriMatrix memory blocks are registered providing synchronous write cycles, while the output registers can be bypassed. In a synchronous operation, RAM generates its own self-timed strobe write enable signal derived from the global or regional clock. In contrast, a circuit using asynchronous RAM must generate the RAM write enable signal while ensuring that its data and address signals meet setup and hold time specifications relative to the write enable signal. During a synchronous operation, the RAM is used in pipelined mode (inputs and outputs registered) or flow-through mode (only inputs registered). However, in an asynchronous memory, neither the input nor the output is registered.

While Stratix II and Stratix II GX devices do not support asynchronous memory, they do support a pseudo-asynchronous read where the output data is available during the clock cycle when the read address is driven into it. Pseudo-asynchronous reading is possible in the simple and true dual-port modes of the M512 and M4K blocks by clocking the read enable and read address registers on the negative clock edge and bypassing the output registers.



Refer to *AN 210: Converting Memory from Asynchronous to Synchronous for Stratix and Stratix GX Designs* for more information.

Power-up Conditions and Memory Initialization

Upon power up, TriMatrix memory is in an idle state. The M512 and M4K block outputs always power-up to zero, regardless of whether the output registers are used or bypassed. Even if an MIF is used to pre-load the contents of the RAM block, the outputs will still power-up as cleared. For example, if address 0 is pre-initialized to FF, the M512 and M4K blocks power up with the output at 00.

M-RAM blocks do not support MIFs; therefore, they cannot be pre-loaded with data upon power up. M-RAM blocks asynchronous outputs and memory controls always power up to an unknown state. If M-RAM block outputs are registered, the registers power up as cleared. When a read is performed immediately after power up, the output from the read operation will be undefined since the M-RAM contents are not initialized. The read operation will continue to be undefined for a given address until a write operation is performed for that address.

Read-During-Write Operation at the Same Address

The "Same-Port Read-During-Write Mode" on page 2–33 and "Mixed-Port Read-During-Write Mode" on page 2–34 sections describe the functionality of the various RAM configurations when reading from an address during a write operation at that same address. There are two read-during-write data flows: same-port and mixed-port. Figure 2–20 shows the difference between these flows.

Figure 2–20. Stratix II and Stratix II GX Read-During-Write Data Flow

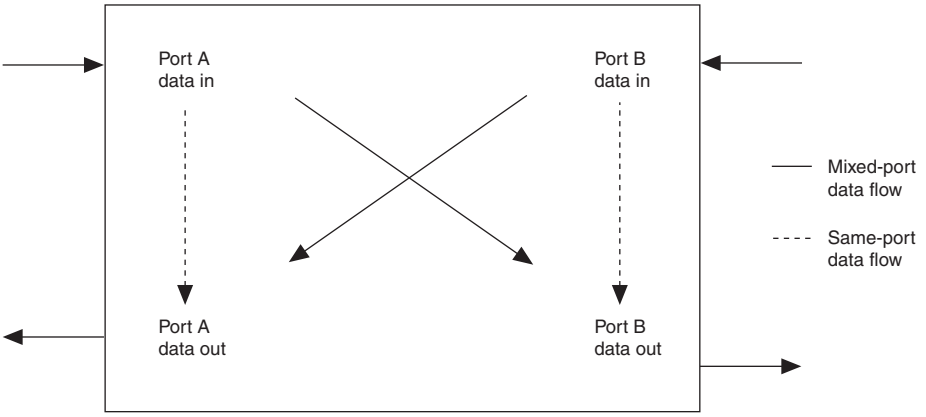

Same-Port Read-During-Write Mode

For read-during-write operation of a single-port RAM or the same port of a true dual-port RAM, the new data is available on the rising edge of the same clock cycle on which it was written. This behavior is valid on all memory block sizes. Figure 2–21 shows a sample functional waveform. When using byte enables in true dual-port RAM mode, the outputs for the masked bytes on the same port are unknown (refer to Figure 2–1 on page 2–7). The non-masked bytes are read out as shown in Figure 2–21.

Figure 2–21. Stratix II and Stratix II GX Same-Port Read-During-Write Functionality *Note (1)*

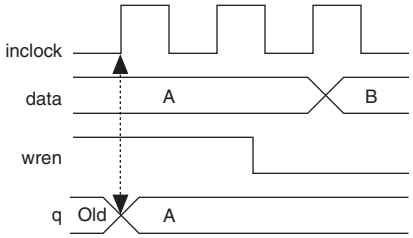

Note to Figure 2–21:
(1) Outputs are not registered.

Mixed-Port Read-During-Write Mode

This mode is used when a RAM in simple or true dual-port mode has one port reading and the other port writing to the same address location with the same clock.

The `READ_DURING_WRITE_MODE_MIXED_PORTS` parameter for M512 and M4K memory blocks determines whether to output the old data at the address or a "don't care" value. Setting this parameter to `OLD_DATA` outputs the old data at that address. Setting this parameter to `DONT_CARE` outputs a "don't care" or unknown value. Figures 2–22 and 2–23 show sample functional waveforms where both ports have the same address. These figures assume that the outputs are not registered.

The `DONT_CARE` setting allows memory implementation in any TriMatrix memory block, whereas the `OLD_DATA` setting restricts memory implementation to only M512 or M4K memory blocks. Selecting `DONT_CARE` gives the compiler more flexibility when placing memory functions into TriMatrix memory.

The RAM outputs are unknown for a mixed-port read-during-write operation of the same address location of an M-RAM block, as shown in Figure 2–23.

Figure 2–22. Stratix II and Stratix II GX Mixed-Port Read-During-Write: OLD_DATA

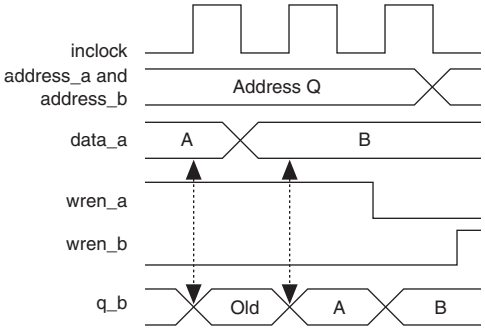

Figure 2–23. Stratix II and Stratix II GX Mixed-Port Read-During-Write: DONT_CARE

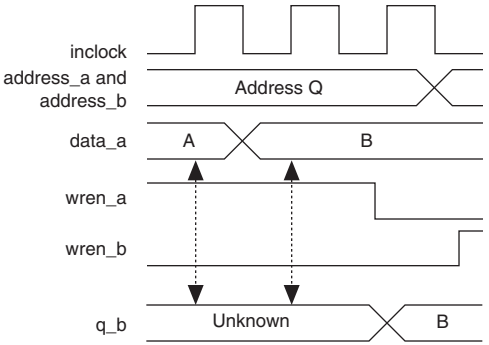

Mixed-port read-during-write is not supported when two different clocks are used in a dual-port RAM. The output value is unknown during a mixed-port read-during-write operation.

Conclusion

The TriMatrix memory structure of Stratix II and Stratix II GX devices provides an enhanced RAM architecture with high memory bandwidth. It addresses the needs of different memory applications in FPGA designs with features such as different memory block sizes and modes, byte enables, parity bit storage, address clock enables, mixed clock mode, shift register mode, mixed-port width support, and true dual-port mode.

Referenced Documents

This chapter references the following documents:

- *AN 207: TriMatrix Memory Selection Using the Quartus II Software*
- *AN 210: Converting Memory from Asynchronous to Synchronous for Stratix and Stratix GX Designs*
- *FIFO Partitioner Megafunction User Guide*
- *Single- and Dual-Clock FIFO Megafunctions User Guide*
- *Stratix II Device Family Data Sheet* (volume 1) of the *Stratix II Device Handbook*
- *Stratix II GX Device Family Data Sheet* (volume 1) of the *Stratix II GX Device Handbook*
- *Using Parity to Detect Memory Errors* white paper

Document Revision History

Table 2–15 shows the revision history for this chapter.

Table 2–15. Document Revision History

Date and Document Version	Changes Made	Summary of Changes
January 2008, v4.5	Added "Referenced Documents" section.	—
	Minor text edits.	—
No change	For the *Stratix II GX Device Handbook* only: Formerly chapter 7. The chapter number changed due to the addition of the *Stratix II GX Dynamic Reconfiguration* chapter. No content change.	—
May 2007, v4.4	Added note to "Byte Enable Functional Waveform" section.	—
	Updated "Byte Enable Support" section.	—
February 2007 v4.3	Added the "Document Revision History" section to this chapter.	—
April 2006, v4.2	Chapter updated as part of the *Stratix II Device Handbook* update.	—
No change	Formerly chapter 6. Chapter number change only due to chapter addition to Section I in February 2006; no content change.	—
December 2005, v4.1	Chapter updated as part of the *Stratix II Device Handbook* update.	—
October 2005 v4.0	Added chapter to the *Stratix II GX Device Handbook*.	—

3. External Memory Interfaces in Stratix II and Stratix II GX Devices

SII52003-4.5

Introduction

Stratix® II and Stratix II GX devices support a broad range of external memory interfaces such as double data rate (DDR) SDRAM, DDR2 SDRAM, RLDRAM II, QDRII SRAM, and single data rate (SDR) SDRAM. Its dedicated phase-shift circuitry allows the Stratix II or Stratix II GX device to interface with an external memory at twice the system clock speed (up to 300 MHz/600 megabits per second (Mbps) with RLDRAM II). In addition to external memory interfaces, you can also use the dedicated phase-shift circuitry for other applications that require a shifted input signal.

Typical I/O architectures transmit a single data word on each positive clock edge and are limited to the associated clock speed. To achieve a 400-Mbps transfer rate, a SDR system requires a 400-MHz clock. Many new applications have introduced a DDR I/O architecture as an alternative to SDR architectures. While SDR architectures capture data on one edge of a clock, the DDR architectures captures data on both the rising and falling edges of the clock, doubling the throughput for a given clock frequency and accelerating performance. For example, a 200-MHz clock can capture a 400-Mbps data stream, enhancing system performance and simplifying board design.

Most new memory architectures use a DDR I/O interface. Although Stratix II and Stratix II GX devices also support the mature and well established SDR external memory, this chapter focuses on DDR memory standards. These DDR memory standards cover a broad range of applications for embedded processor systems, image processing, storage, communications, and networking.

Stratix II devices offer external memory support in every I/O bank. The side I/O banks support the PLL-based interfaces running at up to 200 MHz, while the top and bottom I/O banks support PLL- and DLL-based interfaces. Figure 3–1 shows Stratix II device memory support.

Figure 3–1. External Memory Support

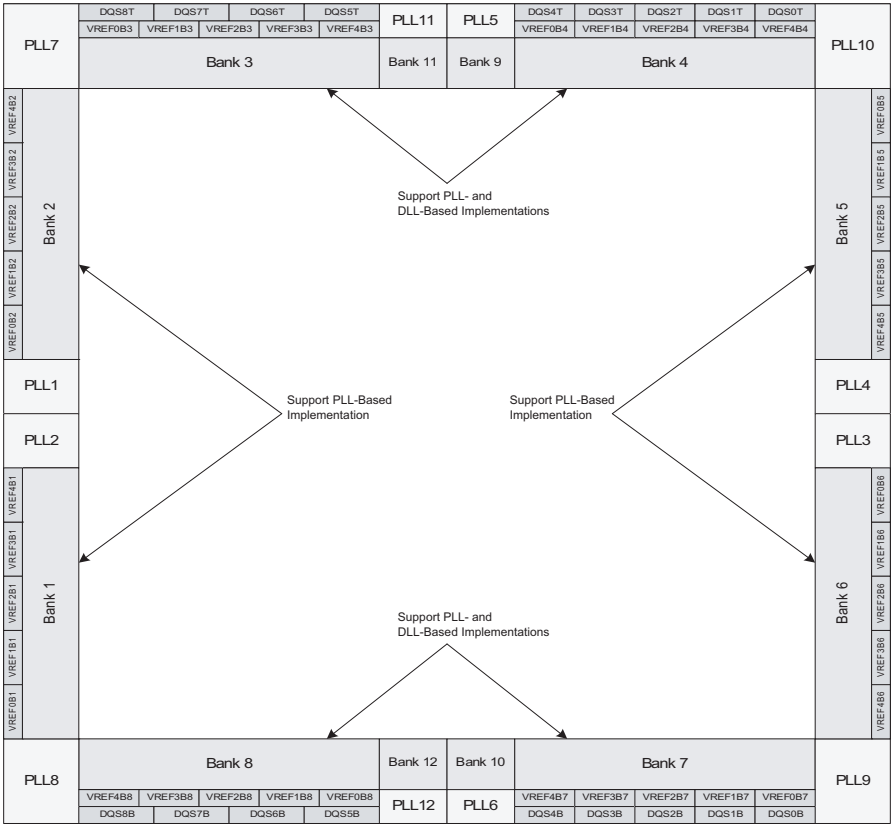

Table 3–1 summarizes the maximum clock rate Stratix II and Stratix II GX devices can support with external memory devices.

Table 3–1. Stratix II and Stratix II GX Maximum Clock Rate Support for External Memory Interfaces Notes (1), (2)

Memory Standards	–3 Speed Grade (MHz)		–4 Speed Grade (MHz)		–5 Speed Grade (MHz)	
	DLL-Based	PLL-Based	DLL-Based	PLL-Based	DLL-Based	PLL-Based
DDR2 SDRAM (3), (5)	333	200	267	167	233	167
DDR SDRAM (3)	200	150	200	133	200	100
RLDRAM II	300	200	250 (4)	175	200	175
QDRII SRAM	300	200	250	167	250	167
QDRII+ SRAM	300	(6)	250	(6)	250	(6)

Notes to Table 3–1:

(1) Memory interface timing specifications are dependent on the memory, board, physical interface, and core logic. Refer to each memory interface application note for more details on how each specification was generated.

(2) The respective Altera MegaCore function and the EP2S60F1020C3 timing information featured in the Quartus® II software version 6.0 was used to define these clock rates.

(3) This applies for interfaces with both modules and components.

(4) You must underclock a 300-MHz RLDRAM II device to achieve this clock rate.

(5) To achieve speeds greater than 267 MHz (533 Mbps) up to 333 MHz (667 Mbps), you must use the Altera DDR2 SDRAM Controller MegaCore function that features a new dynamic auto-calibration circuit in the data path for resynchronization. For more information, see the Altera web site at www.altera.com. For interfaces running at 267 MHz or below, continue to use the static resynchronization data path currently supported by the released version of the MegaCore function.

(6) The lowest frequency at which a QDRII+ SRAM device can operate is 238 MHz. Therefore, the PLL-based implementation does not support the QDRII+ SRAM interface.

This chapter describes the hardware features in Stratix II and Stratix II GX devices that facilitate the high-speed memory interfacing for each DDR memory standard. This chapter focuses primarily on the DLL-based implementation. The PLL-based implementation is described in application notes. It then lists the Stratix II and Stratix II GX feature enhancements from Stratix devices and briefly explains how each memory standard uses the Stratix II and Stratix II GX features.

You can use this document with the following documents:

- AN 325: Interfacing RLDRAM II with Stratix II & Stratix GX Devices
- AN 326: Interfacing QDRII & QDRII+ SRAM with Stratix II, Stratix, & Stratix GX Devices
- AN 327: Interfacing DDR SDRAM with Stratix II Devices
- AN 328: Interfacing DDR2 SDRAM with Stratix II Devices

External Memory Standards

The following sections briefly describe the external memory standards supported by Stratix II and Stratix II GX devices. Altera offers a complete solution for these memories, including clear-text data path, memory controller, and timing analysis.

DDR and DDR2 SDRAM

DDR SDRAM is a memory architecture that transmits and receives data at twice the clock speed. These devices transfer data on both the rising and falling edge of the clock signal. DDR2 SDRAM is a second generation memory based on the DDR SDRAM architecture and transfers data to Stratix II and Stratix II GX devices at up to 333 MHz/667 Mbps. Stratix II and Stratix II GX devices can support DDR SDRAM at up to 200 MHz/400 Mbps. For PLL-based implementations, Stratix II and Stratix II GX devices support DDR and DDR2 SDRAM up to 150 MHz and 200 MHz, respectively.

Interface Pins

DDR and DDR2 SDRAM devices use interface pins such as data (DQ), data strobe (DQS), clock, command, and address pins. Data is sent and captured at twice the system clock rate by transferring data on the clock's positive and negative edge. The commands and addresses still only use one active (positive) edge of a clock. DDR and DDR2 SDRAM use single-ended data strobes (DQS). DDR2 SDRAM can also use optional differential data strobes (DQS and DQS#). However, Stratix II and Stratix II GX devices do not use the optional differential data strobes for DDR2 SDRAM interfaces since DQS and DQSn pins in Stratix II and Stratix II GX devices are not differential. You can leave the DDR SDRAM memory DQS# pin unconnected. Only the shifted DQS signal from the DQS logic block is used to capture data.

DDR and DDR2 SDRAM ×16 devices use two DQS pins, and each DQS pin is associated with eight DQ pins. However, this is not the same as the ×16/×18 mode in Stratix II and Stratix II GX devices (see "Data and Data Strobe Pins" on page 3–14). To support a ×16 DDR SDRAM device, you need to configure Stratix II and Stratix II GX devices to use two sets of DQ pins in ×8/×9 mode. Similarly if your ×32 memory device uses four DQS pins where each DQS pin is associated with eight DQ pins, you need to configure Stratix II and Stratix II GX devices to use four sets of DQS/DQ groups in ×8/×9 mode.

Connect the memory device's DQ and DQS pins to Stratix II and Stratix II GX DQ and DQS pins, respectively, as listed in Stratix II and Stratix II GX pin tables. DDR and DDR2 SDRAM also uses active-high data mask, DM, pins for writes. You can connect the memory's DM pins

to any of Stratix II and Stratix II GX I/O pins in the same bank as the DQ pins of the FPGA. There is one DM pin per DQS/DQ group in a DDR or DDR2 SDRAM device.

You can also use I/O pins in banks 1, 2, 5, or 6 to interface with DDR and DDR2 SDRAM devices. These banks do not have dedicated circuitry, though, and can only support DDR SDRAM at speeds up to 150 MHz and DDR2 SDRAM at speeds up to 200 MHz. DDR2 SDRAM interfaces using these banks are supported using the SSTL-18 Class I I/O standard.



For more information, see AN 327: Interfacing DDR SDRAM with Stratix II Devices and AN 328: Interfacing DDR2 SDRAM with Stratix II Devices.

If the DDR or DDR2 SDRAM device supports error correction coding (ECC), the design will use an extra DQS/DQ group for the ECC pins.

You can use any of the user I/O pins for commands and addresses to the DDR and DDR2 SDRAM. You may need to generate these signals from the system clock's negative edge.

The clocks to the SDRAM device are called CK and CK# pins. Use any of the user I/O pins via the DDR registers to generate the CK and CK# signals to meet the DDR SDRAM or DDR2 SDRAM device's t_{DQSS} requirement. The memory device's t_{DQSS} specification requires that the write DQS signal's positive edge must be within 25% of the positive edge of the DDR SDRAM or DDR2 SDRAM clock input. Using regular I/O pins for CK and CK# also ensures that any PVT variations on the DQS signals are tracked the same way by these CK and CK# pins. Figure 3–2 shows a diagram that illustrates how to generate these clocks.

Figure 3–2. Clock Generation for External Memory Interfaces in Stratix II and Stratix II GX Devices

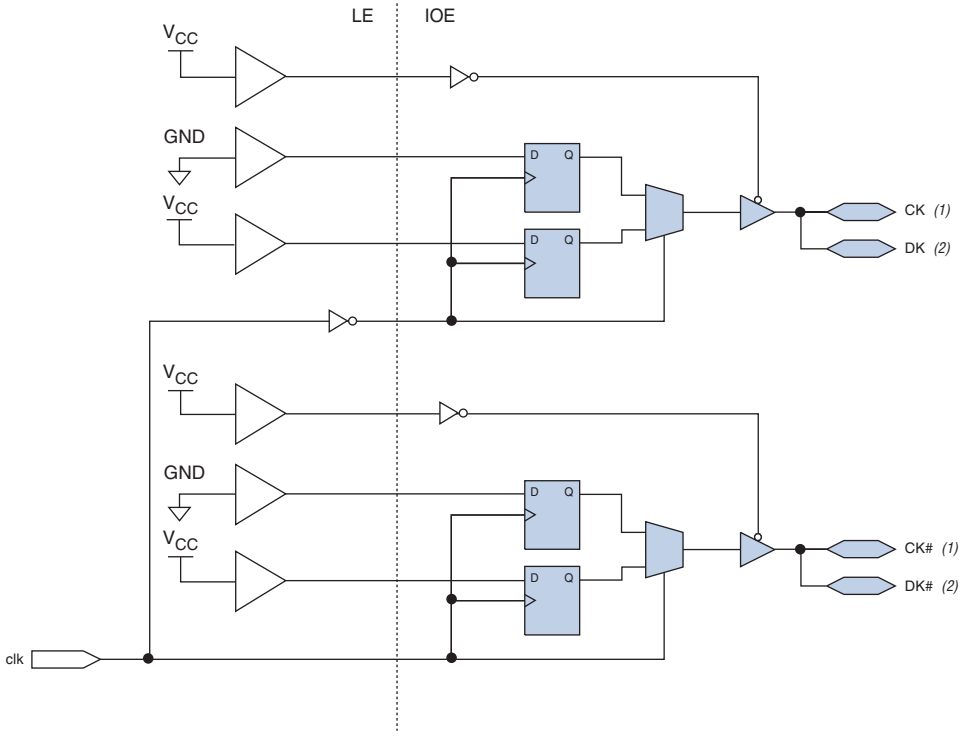

Notes to Figure 3–2:

(1) CK and CK# are the clocks to the memory devices.

(2) DK and DK# are for RLDRAM II interfaces. You can generate DK# and DK from separate pins if the difference of the Quartus II software's reported clock-to-out time for these pins meets the RLDRAM II device's t_{CKDK} specification.

Read and Write Operations

When reading from the memory, DDR and DDR2 SDRAM devices send the data edge-aligned with respect to the data strobe. To properly read the data in, the data strobe needs to be center-aligned with respect to the data inside the FPGA. Stratix II and Stratix II GX devices feature dedicated circuitry to shift this data strobe to the middle of the data window. Figure 3–3 shows an example of how the memory sends out the data and data strobe for a burst-of-two operation.

Figure 3–3. Example of a 90° Shift on the DQS Signal *Notes (1), (2)*

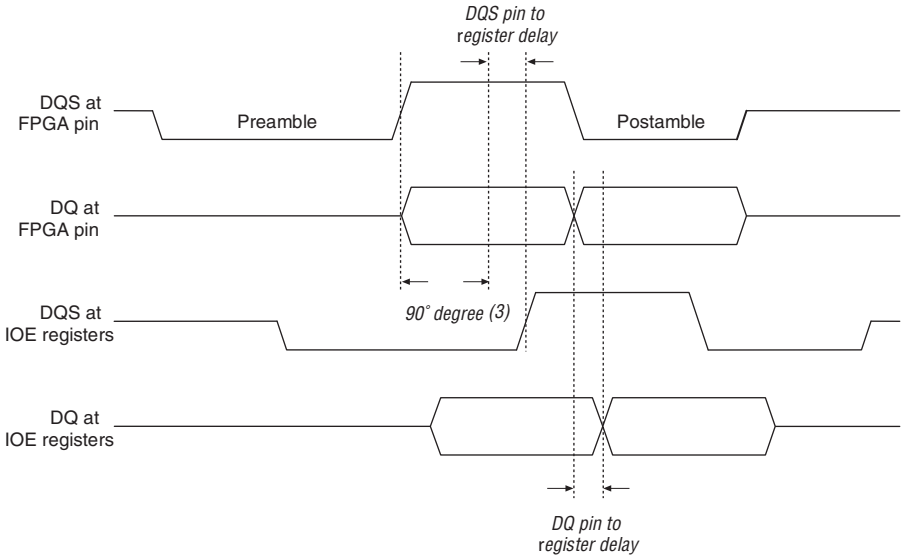

Notes to Figure 3–3:
(1) RLDRAM II and QDRII SRAM memory interfaces do not have preamble and postamble specifications.
(2) DDR2 SDRAM does not support a burst length of two.
(3) The phase shift required for your system should be based on your timing analysis and may not be 90°.

During write operations to a DDR or DDR2 SDRAM device, the FPGA needs to send the data to the memory center-aligned with respect to the data strobe. Stratix II and Stratix II GX devices use a PLL to center-align the data by generating a 0° phase-shifted system clock for the write data strobes and a –90° phase-shifted write clock for the write data pins for DDR and DDR2 SDRAM. Figure 3–4 shows an example of the relationship between the data and data strobe during a burst-of-four write.

Figure 3–4. DQ and DQS Relationship During a DDR and DDR2 SDRAM Write *Notes (1), (2)*

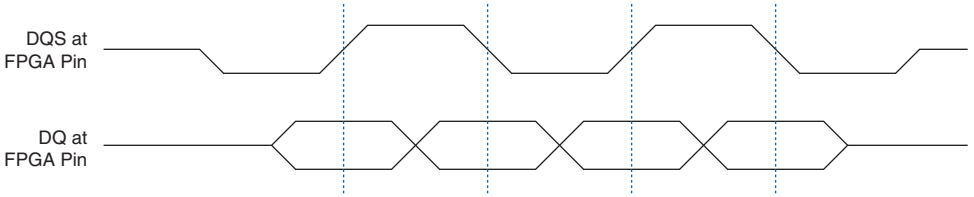

Notes to Figure 3–4:

(1) This example shows a write for a burst length of four. DDR SDRAM also supports burst lengths of two.

(2) The write clock signals never go to hi-Z state on RLDRAM II and QDRII SRAM memory interfaces because they use free-running clocks. However, the general timing relationship between data and the read clock shown in this figure still applies.

For more information on DDR SDRAM and DDR2 SDRAM specifications, refer to JEDEC standard publications JESD79C and JESD79-2, respectively, from www.jedec.org, or see AN 327: Interfacing DDR SDRAM with Stratix II Devices and AN 327: Interfacing DDR SDRAM with Stratix II Devices.

RLDRAM II

RLDRAM II provides fast random access as well as high bandwidth and high density, making this memory technology ideal for high-speed network and communication data storage applications. The fast random access speeds in RLDRAM II devices make them a viable alternative to SRAM devices at a lower cost. Additionally, RLDRAM II devices have minimal latency to support designs that require fast response times.

Interface Pins

RLDRAM II devices use interface pins such as data, clock, command, and address pins. There are two types of RLDRAM II memory: common I/O (CIO) and separate I/O (SIO). The data pins in a RLDRAM II CIO device are bidirectional while the data pins in a RLDRAM II SIO device are unidirectional. Instead of bidirectional data strobes, RLDRAM II uses differential free-running read and write clocks to accompany the data. As in DDR or DDR2 SDRAM, data is sent and captured at twice the system clock rate by transferring data on the clock's positive and negative edge. The commands and addresses still only use one active (positive) edge of a clock.

If the data pins are bidirectional, as in RLDRAM II CIO devices, connect them to Stratix II and Stratix II GX DQ pins. If the data pins are unidirectional, as in RLDRAM II SIO devices, connect the RLDRAM II device Q ports to the Stratix II and Stratix II GX device DQ pins and

connect the D ports to any user I/O pins in I/O banks 3, 4, 7, or 8 for optimal performance. RLDRAM II also uses active-high data mask, DM, pins for writes. You can connect DM pins to any of the I/O pins in the same bank as the DQ pins of the FPGA when interfacing with RLDRAM II CIO devices to any of the I/O pins in the same bank as the D pins when interfacing with RLDRAM II SIO devices. There is one DM pin per RLDRAM II device. You can also use I/O pins in banks 1, 2, 5, or 6 to interface with RLDRAM II devices. However, these banks do not have dedicated circuitry and can only support RLDRAM II devices at speeds up to 200 MHz. RLDRAM II interfaces using these banks are supported using the 1.8-V HSTL Class I I/O support.

Connect the RLDRAM II device's read clock pins (QK) to Stratix II or Stratix II GX DQS pins. Because of software requirements, you must configure the DQS signals as bidirectional pins. However, since QK pins are output-only pins from the memory, RLDRAM II memory interfacing in Stratix II and Stratix II GX devices requires that you ground the DQS pin output enables. Stratix II and Stratix II GX devices use the shifted QK signal from the DQS logic block to capture data. You can leave the QK# signal of the RLDRAM II device unconnected, as DQS and DQSn in Stratix II and Stratix II GX devices are not differential pins.

RLDRAM II devices also have input clocks (CK and CK#) and write clocks (DK and DK#).

You can use any of the user I/O pins for commands and addresses. RLDRAM II also offers QVLD pins to indicate the read data availability. Connect the QVLD pins to the Stratix II or Stratix II GX DQVLD pins, listed in the pin table.



Because the Quartus II software treats the DQVLD pins like DQ pins, you should ensure that the DQVLD pin is assigned to the pin table's recommended pin.

Read and Write Operations

When reading from the RLDRAM II device, data is sent edge-aligned with the read clock QK and QK#. When writing to the RLDRAM II device, data must be center-aligned with the write clock (DK and DK#). The RLDRAM II interface uses the same scheme as in DDR or DDR2 SDRAM interfaces, where the dedicated circuitry is used during reads to center-align the data and the read clock inside the FPGA and the PLL center-aligns the data and write clock outputs. The data and clock relationship for reads and writes in RLDRAM II is similar to those in DDR and DDR2 SDRAM as shown in Figures 3–3 and 3–4.



For details on RLDRAM II, see AN 325: Interfacing RLDRAM II with Stratix II & Stratix GX Devices.

QDRII SRAM

QDRII SRAM is the second generation of QDR SRAM devices. Both devices can transfer four words per clock cycle, fulfilling the requirements facing next-generation communications system designers. QDRII SRAM devices provide concurrent reads and writes, zero latency, and increased data throughput, allowing simultaneous access to the same address location. QDRII SRAM is available in burst-of-2 and burst-of-4 devices. Burst-of-2 devices support two-word data transfer on all read and write transactions, and burst-of-4 devices support four-word data transfer

Interface Pins

QDRII SRAM uses two separate, unidirectional data ports for read and write operations, enabling QDR data transfer. QDRII SRAM uses shared address lines for reads and writes. QDRII SRAM burst-of-two devices sample the read address on the rising edge of the clock and sample the write address on the falling edge of the clock while QDRII SRAM burst-of-four devices sample both read and write addresses on the clock's rising edge. Connect the memory device's Q ports (read data) to the Stratix II or Stratix II GX DQ pins. You can use any of the Stratix II or Stratix II GX device user I/O pins in I/O banks 3, 4, 7, or 8 for the D ports (write data), commands, and addresses. The control signals are sampled on the rising edge of the clock. You can also use I/O pins in banks 1, 2, 5, or 6 to interface with QDRII SRAM devices. However, these banks do not have dedicated circuitry and can only support QDRII SRAM devices at speeds up to 200 MHz. QDRII SRAM interfaces using these banks are supported using the 1.8-V HSTL Class I I/O support.

QDRII SRAM uses the following clock signals:

- Input clocks K and K#
- Output clocks C and C#
- Echo clocks CQ and CQ#

Clocks C#, K#, and CQ# are logical complements of clocks C, K, and CQ, respectively. Clocks C, C#, K, and K# are inputs to the QDRII SRAM while clocks CQ and CQ# are outputs from the QDRII SRAM. Stratix II and Stratix II GX devices use single-clock mode for single-device QDRII SRAM interfacing where the K and K# are used for write operations, and CQ and CQ# are used for read operations. You should use both C or C# and K or K# clocks when interfacing with a bank of multiple QDRII SRAM devices with a single controller.

You can generate C, C#, K, and K# clocks using any of the I/O registers via the DDR registers. Because of strict skew requirements between K and K# signals, use adjacent pins to generate the clock pair.

Connect CQ and CQ# pins to the Stratix II or Stratix II GX DQS and DQSn pins for DLL-based implementations. You must configure DQS and DQSn as bidirectional pins. However, since CQ and CQ# pins are output-only pins from the memory, the Stratix II or Stratix II GX device QDRII SRAM memory interface requires that you ground the DQS and DQSn output enable. To capture data presented by the memory, connect the shifted CQ signal to the input latch and connect the active-high input registers and the shifted CQ# signal is connected to the active-low input register. For PLL-based implementations, connect QK to the input of the read PLL and leave QK# unconnected.

Read and Write Operations

Figure 3–5 shows the data and clock relationships in QDRII SRAM devices at the memory pins during reads. Data is output one-and-a-half clock cycles after a read command is latched into memory. QDRII SRAM devices send data within a t_{CO} time after each rising edge of the read clock C or C# in multi-clock mode, or the input clock K or K# in single clock mode. Data is valid until t_{DOH} time after each rising edge of the read clock C or C# in multi-clock mode or the input clock K or K# in single clock mode. The CQ and CQ# clocks are edge-aligned with the read data signal. These clocks accompany the read data for data capture in Stratix II and Stratix II GX devices.

Figure 3–5. Data and Clock Relationship During a QDRII SRAM Read *Note (1)*

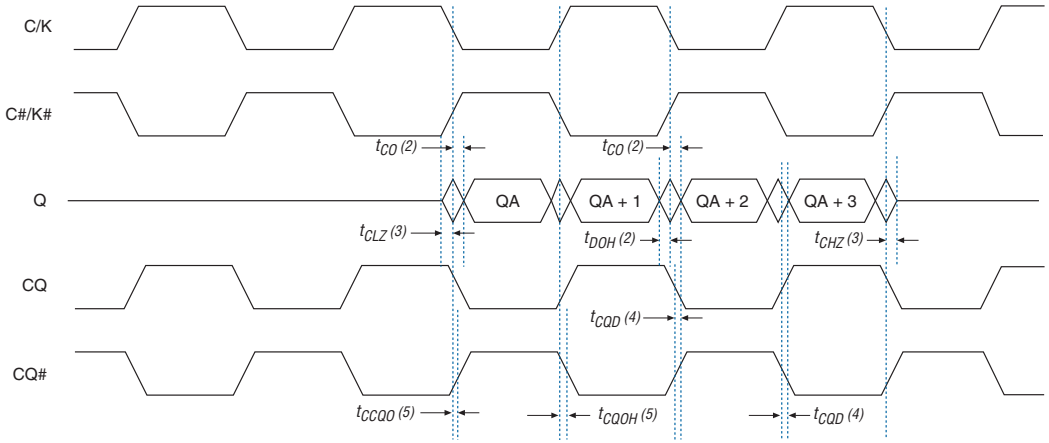

Notes to Figure 3–5:

(1) This relationship is at the memory device. The timing parameter nomenclature is based on the Cypress QDRII SRAM data sheet for CY7C1313V18.

(2) t_{CO} is the data clock-to-out time and t_{DOH} is the data output hold time between burst.

(3) t_{CLZ} and t_{CHZ} are bus turn-on and turn-off times respectively.

(4) t_{CQD} is the skew between the rising edge of CQ or CQ# and the data edges.

(5) t_{CCQO} and t_{CQOH} are skew measurements between the C or C# clocks (or the K or K# clocks in single-clock mode) and the CQ or CQ# clocks.

When reading from the QDRII SRAM, data is sent edge-aligned with the rising edge of the echo clocks CQ and CQ#. Both CQ and CQ# are shifted inside the FPGA using DQS and DQSn logic blocks to capture the data in the DDR IOE registers in DLL-based implementations. In PLL-based implementations, CQ feeds a PLL, which generates the clock to capture the data in the DDR IOE registers.

When writing to QDRII SRAM devices, data is generated by the write clock while the K clock is 90° shifted from the write clock, creating a center-aligned arrangement.

Read and write operations occur during the same clock cycle on independent read and write data paths along with the cycle-shared address bus. Performing concurrent reads and writes does not change the functionality of either transaction. If a read request occurs simultaneously with a write request at the same address, the new data on D is forwarded to Q. Therefore, latency is not required to access valid data.

For more information on QDRII SRAM, go to www.qdrsram.com or see AN 326: Interfacing QDRII & QDRII+ SRAM with Stratix II, Stratix, & Stratix GX Devices.

Stratix II and Stratix II GX DDR Memory Support Overview

This section describes Stratix II and Stratix II GX features that enable high-speed memory interfacing. It first describes Stratix II and Stratix II GX memory pins and then the DQS phase-shift circuitry and the DDR I/O registers. Table 3–2 shows the I/O standard associated with the external memory interfaces.

Table 3–2. External Memory Support in Stratix II and Stratix II GX Devices

Memory Standard	I/O Standard
DDR SDRAM	SSTL-2 Class II
DDR2 SDRAM	SSTL-18 Class II *(1)*
RLDRAM II *(2)*	1.8-V HSTL Class I or II *(1)*
QDRII SRAM *(2)*	1.8-V HSTL Class I or II *(1)*

Notes to Table 3–2:

(1) Stratix II and Stratix II GX devices support 1.8-V HSTL/SSTL-18 Class I and II I/O standards in I/O banks 3, 4, 7, and 8. In I/O banks 1, 2, 5, and 6, Class I is supported for both input and output operations, while Class II is only supported for input operations for these I/O standards.

(2) For maximum performance, Altera recommends using the 1.8-V HSTL I/O standard. RLDRAM II and QDRII SRAM devices also support the 1.5-V HSTL I/O standard.

Stratix II and Stratix II GX devices support the data strobe or read clock signal (DQS) used in DDR SDRAM, DDR2 SDRAM, RLDRAM II, and QDRII SRAM devices with dedicated circuitry. Stratix II and Stratix II GX devices also support the DQSn signal (the DQS complement signal) for external memory types that require them, for example QDRII SRAM. DQS and DQSn signals are usually associated with a group of data (DQ) pins. However, these are not differential buffers and cannot be used in DDR2 SDRAM or RLDRAM II interfaces.



You can also interface with these external memory devices without the use of dedicated circuitry at a lower performance.



For more information, see the appropriate Stratix II or Stratix II GX memory interfaces application note available at www.altera.com.

Stratix II and Stratix II GX devices contain dedicated circuitry to shift the incoming DQS signals by 0°, 22.5°, 30°, 36°, 45°, 60°, 67.5°, 72°, 90°, 108°, 120°, or 144°, depending on the delay-locked loop (DLL) mode. There are four DLL modes. The DQS phase-shift circuitry uses a frequency reference to dynamically generate control signals for the delay chains in each of the DQS and DQSn pins, allowing it to compensate for process,

voltage, and temperature (PVT) variations. This phase-shift circuitry has been enhanced in Stratix II and Stratix II GX devices to support more phase-shift options with less jitter.

Besides the DQS dedicated phase-shift circuitry, each DQS and DQSn pin has its own DQS logic block that sets the delay for the signal input to the pin. Using the DQS dedicated phase-shift circuitry with the DQS logic block allows for phase-shift fine-tuning. Additionally, every IOE in a Stratix II or Stratix II GX device contains six registers and one latch to achieve DDR operation.

DDR Memory Interface Pins

Stratix II and Stratix II GX devices use data (DQ), data strobe (DQS and DQSn), and clock pins to interface with external memory.

Figure 3–6 shows the DQ, DQS, and DQSn pins in the Stratix II or Stratix II GX I/O banks on the top of the device. A similar arrangement is repeated at the bottom of the device.

Figure 3–6. DQ and DQS Pins Per I/O Bank

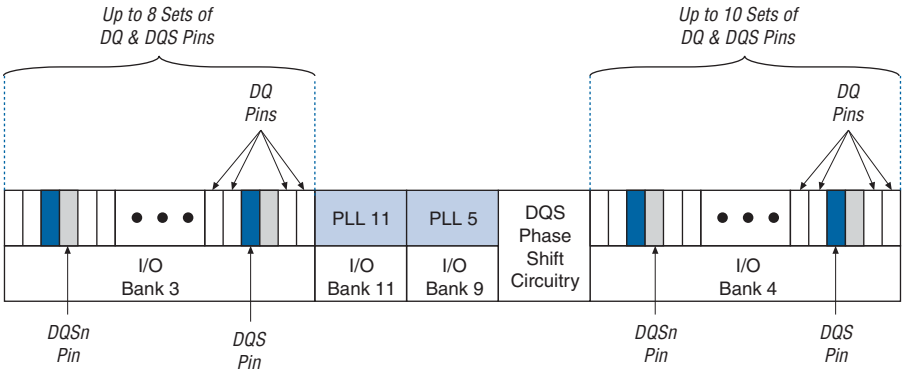

Data and Data Strobe Pins

Stratix II and Stratix II GX data pins for the DDR memory interfaces are called DQ pins. Stratix II and Stratix II GX devices can use either bidirectional data strobes or unidirectional read clocks. Depending on the external memory interface, either the memory device's read data strobes or read clocks feed the Stratix II or Stratix II GX DQS (and DQSn) pins.

Stratix II and Stratix II GX DQS pins connect to the DQS pins in DDR and DDR2 SDRAM interfaces or to the QK pins in RLDRAM II interfaces. The DQSn pins are not used in these interfaces. Connect the Stratix II or Stratix II GX DQS and DQSn pins to the QDRII SRAM CQ and CQ# pins, respectively.

In every Stratix II or Stratix II GX device, the I/O banks at the top (I/O banks 3 and 4) and bottom (I/O banks 7 and 8) of the device support DDR memory up to 300 MHz/600 Mbps (with RLDRAM II). These I/O banks support DQS signals and its complement DQSn signals with DQ bus modes of ×4, ×8/×9, ×16/×18, or ×32/×36.

In ×4 mode, each DQS/DQSn pin drives up to four DQ pins within that group. In ×8/×9 mode, each DQS/DQSn pin drives up to nine DQ pins within that group to support one parity bit and the eight data bits. If the parity bit or any data bit is not used, the extra DQ pins can be used as regular user I/O pins. Similarly, with ×16/×18 and ×32/×36 modes, each DQS/DQSn pin drives up to 18 and 36 DQ pins respectively. There are two parity bits in the ×16/×18 mode and four parity bits in the ×32/×36 mode. Tables 3–3 through 3–6 show the number of DQS/DQ groups and non-DQS /DQ supported in each Stratix II or Stratix II GX density/package combination, respectively, for DLL-based implementations.

Table 3–3. Stratix II DQS and DQ Bus Mode Support (Part 1 of 2) *Note (1)*

Device	Package	Number of ×4 Groups	Number of ×8/×9 Groups	Number of ×16/×18 Groups	Number of ×32/×36 Groups
EP2S15	484-pin FineLine BGA	8	4	0	0
	672-pin FineLine BGA	18	8	4	0
EP2S30	484-pin FineLine BGA	8	4	0	0
	672-pin FineLine BGA	18	8	4	0
EP2S60	484-pin FineLine BGA	8	4	0	0
	672-pin FineLine BGA	18	8	4	0
	1,020-pin FineLine BGA	36	18	8	4
EP2S90	484-pin Hybrid FineLine BGA	8	4	0	0
	780-pin FineLine BGA	18	8	4	0
	1,020-pin FineLine BGA	36	18	8	4
	1,508-pin FineLine BGA	36	18	8	4
EP2S130	780-pin FineLine BGA	18	8	4	0
	1,020-pin FineLine BGA	36	18	8	4
	1,508-pin FineLine BGA	36	18	8	4

Table 3–3. Stratix II DQS and DQ Bus Mode Support (Part 2 of 2) *Note (1)*

Device	Package	Number of ×4 Groups	Number of ×8/×9 Groups	Number of ×16/×18 Groups	Number of ×32/×36 Groups
EP2S180	1,020-pin FineLine BGA	36	18	8	4
	1,508-pin FineLine BGA	36	18	8	4

Note to Table 3–3:
(1) Check the pin table for each DQS/DQ group in the different modes.

Table 3–4. Stratix II non-DQS and DQ Bus Mode Support *Note (1)*

Device	Package	Number of ×4 Groups	Number of ×8/×9 Groups	Number of ×16/×18 Groups	Number of ×32/×36 Groups
EP2S15	484-pin FineLine BGA	13	7	3	1
	672-pin FineLine BGA	24	9	4	2
EP2S30	484-pin FineLine BGA	13	7	3	1
	672-pin FineLine BGA	36	15	7	3
EP2S60	484-pin FineLine BGA	13	7	3	1
	672-pin FineLine BGA	36	15	7	3
	1,020-pin FineLine BGA	51	26	13	6
EP2S90	780-pin FineLine BGA	40	24	12	6
	1,020-pin FineLine BGA	51	25	12	6
	1,508-pin FineLine BGA	51	25	12	6
EP2S130	780-pin FineLine BGA	40	24	12	6
	1,020-pin FineLine BGA	51	25	12	6
	1,508-pin FineLine BGA	51	25	12	6
EP2S180	1,020-pin FineLine BGA	51	25	12	6
	1,508-pin FineLine BGA	51	25	12	6

Note to Table 3–4:
(1) Check the pin table for each DQS/DQ group in the different modes.

Table 3–5. Stratix II GX DQS and DQ Bus Mode Support *Note (1)*

Device	Package	Number of ×4 Groups	Number of ×8/×9 Groups	Number of ×16/×18 Groups	Number of ×32/×36 Groups
EP2SGX30C EP2SGX30D	780-pin FineLine BGA	18	8	4	0
EP2SGX60C EP2SGX60D	780-pin FineLine BGA	18	8	4	0
EP2SGX60E	1,152-pin FineLine BGA	36	18	8	4
EP2SGX90E	1,152-pin FineLine BGA	36	18	8	4
EP2SGX90F	1,508-pin FineLine BGA	36	18	8	4
EP2SGX130G	1,508-pin FineLine BGA	36	18	8	4

Note to Table 3–5:
(1) Check the pin table for each DQS/DQ group in the different modes.

Table 3–6. Stratix II GX Non-DQS and DQ Bus Mode Support *Note (1)*

Device	Package	Number of ×4 Groups	Number of ×8/×9 Groups	Number of ×16/×18 Groups	Number of ×32/×36 Groups
EP2SGX30	780-pin FineLine BGA	18	8	4	2
EP2SGX60	780-pin FineLine BGA	18	8	4	2
	1,152-pin FineLine BGA	25	13	6	3
EP2SGX90	1,152-pin FineLine BGA	25	13	6	3
	1,508-pin FineLine BGA	25	12	6	3
EP2SGX130	1,508-pin FineLine BGA	25	12	6	3

Note to Table 3–6:
(1) Check the pin table for each DQS/DQ group in the different modes.



To support the RLDRAM II QVLD pin, some of the unused ×4 DQS pins, whose DQ pins were combined to make the bigger ×8/×9, ×16/×18, or ×32/×36 groups, are listed as DQVLD pins in the Stratix II or Stratix II GX pin table. DQVLD pins are for input-only operations. The signal coming into this pin can be captured by the shifted DQS signal like any of the DQ pins.

The DQS pins are listed in the Stratix II or Stratix II GX pin tables as DQS[17..0]T or DQS[17..0]B. The T denotes pins on the top of the device and the B denotes pins on the bottom of the device. The complement DQSn pins are marked as DQSn[17..0]T or DQSn[17..0]B. The corresponding DQ pins are marked as DQ[17..0]T[3..0], where [17..0] indicates which DQS group the pins belong to. Similarly, the corresponding DQVLD pins are marked as DQVLD[8..0]T, where [8..0] indicates which DQS group the pins belong to. The numbering scheme starts from right to left on the package bottom view. When not used as DQ, DQS, or DQSn pins, these pins are available as regular I/O pins. Figure 3–7 shows the DQS pins in Stratix II or Stratix II GX I/O banks.

The Quartus II software treats DQVLD pins as regular DQ pins. Therefore, you must ensure that the DQVLD pin assigned in your design corresponds to the pin table's recommended DQVLD pins.

Figure 3–7. DQS Pins in Stratix II and Stratix II GX I/O Banks *Notes (1), (2), (3)*

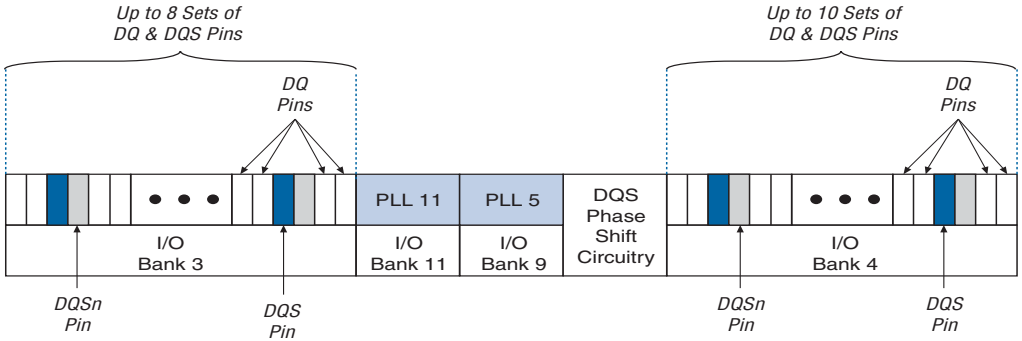

Notes to Figure 3–7:

(1) There are up to 18 pairs of DQS and DQSn pins on both the top and bottom of the device. See Table 3–3 for the exact number of DQS and DQSn pin pairs in each device package.

(2) See Table 3–7 for the available DQS and DQSn pins in each mode and package.

(3) Each DQS pin has a complement DQSn pin. DQS and DQSn pins are not differential.

The DQ pin numbering is based on ×4 mode. There are up to 8 DQS/DQ groups in ×4 mode in I/O banks 3 and 8 and up to 10 DQS/DQ groups in ×4 mode in I/O banks 4 and 7. In ×8/×9 mode, two adjacent ×4 DQS/DQ groups plus one parity pin are combined; one pair of DQS/DQSn pins from the combined groups can drive all the DQ and parity pins. Since there is an even number of DQS/DQ groups in an I/O bank, combining groups is efficient. Similarly, in ×16/×18 mode, four adjacent ×4 DQS/DQ groups plus two parity pins are combined and one pair of DQS/DQSn pins from the combined groups can drive all the DQ and parity pins. In

×32/×36 mode, eight adjacent DQS/DQ groups are combined and one pair of DQS/DQSn pins can drive all the DQ and parity pins in the combined groups.

Table 3–7 shows which DQS and DQSn pins are available in each mode and package in the Stratix II or Stratix II GX device family.

Table 3–7. Available DQS and DQSn Pins in Each Mode and Package *Note (1)*

Mode	Package		
	484-Pin FineLine BGA 484-Pin Hybrid FineLine BGA	672-Pin FineLine BGA 780-Pin FineLine BGA	1,020-Pin FineLine BGA 1,508-Pin FineLine BGA
×4	7, 9, 11, 13	Odd-numbered pins only	All DQS and DQSn pins
×8/×9	7,11	3, 7, 11, 15	Even-numbered pins only
×16/×18	N/A	5, 13	3, 7, 11, 15
×32/×36	N/A	N/A	5, 13

Note to Table 3–7:

(1) The numbers correspond to the DQS and DQSn pin numbering in the Stratix II or Stratix II GX pin table. There are two sets of DQS/DQ groups, one corresponding with the top side of the device and one with the bottom side of the device.



On the top and bottom side of the device, the DQ and DQS pins must be configured as bidirectional DDR pins to enable the DQS phase-shift circuitry. The DQSn pins can be configured as input, output, or bidirectional pins. You can use the `altdq` and `altdqs` megafunctions to configure the DQ and DQS/DQSn paths, respectively. However, Altera highly recommends that you use the respective Altera memory controller IP Tool Bench for your external memory interface data paths. The data path is clear-text and free to use. You are responsible for your own timing analysis if you use your own data path. If you only want to use the DQ and/or DQS pins as inputs, you need to set the output enable of the DQ and/or DQS pins to ground.

Stratix II or Stratix II GX side I/O banks (I/O banks 1, 2, 5, and 6) support all the memory interfaces supported in the top and bottom I/O banks. For optimal performance, use the Altera memory controller IP Tool Bench to pick the data and strobe pins for these interfaces. Since these I/O banks do not have any dedicated circuitry for memory interfacing, they can support DDR SDRAM at speeds up to 150 MHz and other DDR memories at speeds up to 200 MHz. You need to use the SSTL-18 Class I I/O standard when interfacing with DDR2 SDRAM devices using pins in I/O bank 1, 2, 5, or 6. These I/O banks do not support the SSTL-18 Class II and

1.8-V HSTL Class II I/O standards on output and bidirectional pins, but you can use SSTL-18 Class I or 1.8-V HSTL Class I I/O standards for memory interfaces.



The Altera memory controller IP Tool Bench generates the optimal pin constraints that allow you to interface these memories at high frequency.

Table 3–8 shows the maximum clock rate supported for the DDR SDRAM interface in the Stratix II or Stratix II GX device side I/O banks.

Table 3–8. Maximum Clock Rate for DDR and DDR2 SDRAM in Stratix II or Stratix II GX Side I/O Banks

Stratix II or Stratix II GX Device Speed Grade	DDR SDRAM (MHz)	DDR2 SDRAM (MHz)	QDRII SRAM (MHz)	RLDRAM II (MHz)
-3	150	200	200	200
-4	133	167	167	175
-5	133	167	167	175

Clock Pins

You can use any of the DDR I/O registers to generate clocks to the memory device. For better performance, use the same I/O bank as the data and address/command pins.

Command and Address Pins

You can use any of the user I/O pins in the top or bottom bank of the device for commands and addresses. For better performance, use the same I/O bank as the data pins.

Other Pins (Parity, DM, ECC and QVLD Pins)

You can use any of the DQ pins for the parity pins in Stratix II and Stratix II GX devices. The Stratix II or Stratix II GX device family has support for parity in the ×8/×9, ×16/×18, and ×32/×36 mode. There is one parity bit available per 8 bits of data pins.

The data mask, DM, pins are only required when writing to DDR SDRAM, DDR2 SDRAM, and RLDRAM II devices. A low signal on the DM pins indicates that the write is valid. If the DM signal is high, the memory will mask the DQ signals. You can use any of the I/O pins in the same bank as the DQ pins (or the RLDRAM II SIO's and QDRII SRAM's D pins) for the DM signals. Each group of DQS and DQ signals in DDR

and DDR2 SDRAM devices requires a DM pin. There is one DM pin per RLDRAM II device. The DDR I/O output registers, clocked by the –90° shifted clock, creates the DM signals, similar to DQ output signals.



Perform timing analysis to calculate your write-clock phase shift.

Some DDR SDRAM and DDR2 SDRAM devices support error correction coding (ECC), which is a method of detecting and automatically correcting errors in data transmission. In a 72-bit DDR SDRAM interface, there are eight ECC pins in addition to the 64 data pins. Connect the DDR and DDR2 SDRAM ECC pins to a Stratix II or Stratix II GX device DQS/DQ group. The memory controller needs extra logic to encode and decode the ECC data.

QVLD pins are used in RLDRAM II interfacing to indicate the read data availability. There is one QVLD pin per RLDRAM II device. A high on QVLD indicates that the memory is outputting the data requested. Similar to DQ inputs, this signal is edge-aligned with QK/QK# signals and is sent half a clock cycle before data starts coming out of the memory. You need to connect QVLD pins to the DQVLD pin on the Stratix II or Stratix II GX device. The DQVLD pin can be used as a regular user I/O pin if not used for QVLD. Because the Quartus II software does not differentiate DQVLD pins from DQ pins, you must ensure that your design uses the pin table's recommended DQVLD pin.

DQS Phase-Shift Circuitry

The Stratix II or Stratix II GX phase-shift circuitry and the DQS logic block control the DQS and DQSn pins. Each Stratix II or Stratix II GX device contains two phase-shifting circuits. There is one circuit for I/O banks 3 and 4, and another circuit for I/O banks 7 and 8. The phase-shifting circuit on the top of the device can control all the DQS and DQSn pins in the top I/O banks and the phase-shifting circuit on the bottom of the device can control all the DQS and DQSn pins in the bottom I/O banks. Figure 3–8 shows the DQS and DQSn pin connections to the DQS logic block and the DQS phase-shift circuitry.

Figure 3–8. DQS and DQSn Pins and the DQS Phase-Shift Circuitry *Note (1)*

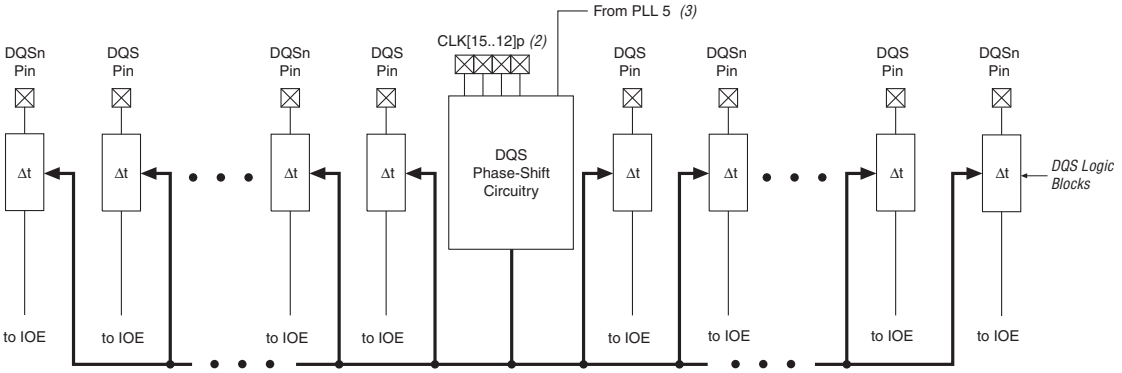

Notes to Figure 3–8:

(1) There are up to 18 pairs of DQS and DQSn pins available on the top or the bottom of the Stratix II or Stratix II GX device, up to 8 on the left side of the DQS phase-shift circuitry (I/O banks 3 and 8), and up to 10 on the right side (I/O bank 4 and 7).

(2) Clock pins `CLK[15..12]p` feed the phase-shift circuitry on the top of the device and clock pins `CLK[7..4]p` feed the phase-shift circuitry on the bottom of the device. You can also use a phase-locked loop (PLL) clock output as a reference clock to the phase-shift circuitry. The reference clock can also be used in the logic array.

(3) You can only use PLL 5 to feed the DQS phase-shift circuitry on the top of the device and PLL 6 to feed the DQS phase-shift circuitry on the bottom of the device.

Figure 3–9 shows the connections between the DQS phase-shift circuitry and the DQS logic block.

Figure 3–9. DQS Phase-Shift Circuitry and DQS Logic Block Connections *Note (1)*

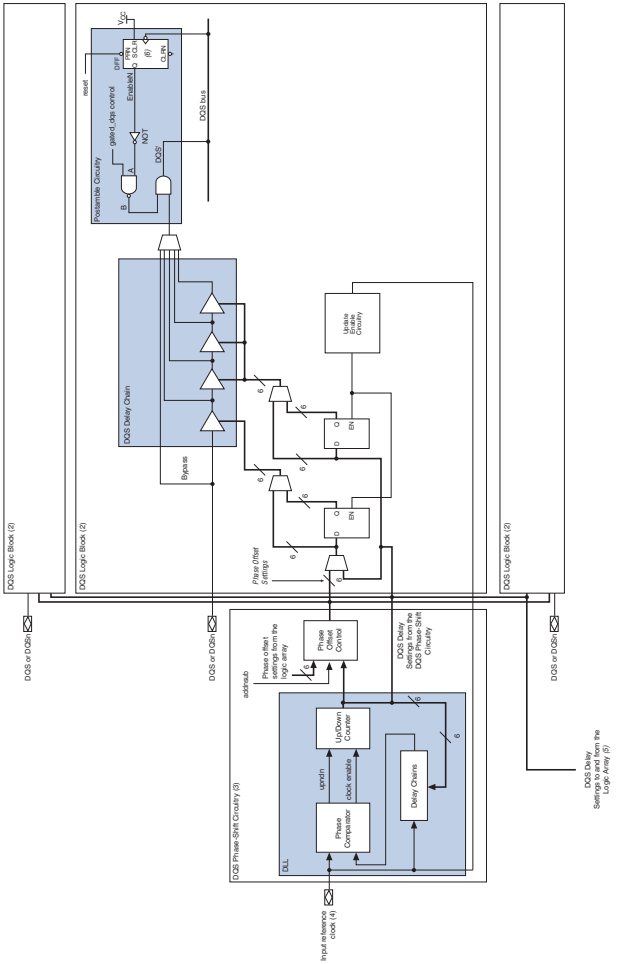

Notes to Figure 3–9:

(1) All features of the DQS phase-shift circuitry and the DQS logic block are accessible from the `altdqs` megafunction in the Quartus II software. You should, however, use Altera's memory controller IP Tool Bench to generate the data path for your memory interface.

(2) DQS logic block is available on every DQS and DQSn pin.

(3) There is one DQS phase-shift circuit on the top and bottom side of the device.

(4) The input reference clock can come from `CLK[15..12]p` or PLL 5 for the DQS phase-shift circuitry on the top side of the device or from `CLK[7..4]p` or PLL 6 for the DQS phase-shift circuitry on the bottom side of the device.

(5) Each individual DQS and DQSn pair can have individual DQS delay settings to and from the logic array.

(6) This register is one of the DQS IOE input registers.

The phase-shift circuitry is only used during read transactions where the DQS and DQSn pins are acting as input clocks or strobes. The phase-shift circuitry can shift the incoming DQS signal by 0°, 22.5°, 30°, 36°, 45°, 60°, 67.5°, 72°, 90°, 108°, 120°, or 144°. The shifted DQS signal is then used as clocks at the DQ IOE input registers.

Figure 3–3 shows an example where the DQS signal is shifted by 90°. The DQS signals goes through the 90° shift delay set by the DQS phase-shift circuitry and the DQS logic block and some routing delay from the DQS pin to the DQ IOE registers. The DQ signals only goes through routing delay from the DQ pin to the DQ IOE registers and maintains the 90° relationship between the DQS and DQ signals at the DQ IOE registers since the software will automatically set delay chains to match the routing delay between the pins and the IOE registers for the DQ and DQS input paths.

All 18 DQS and DQSn pins on either the top or bottom of the device can have their input signal phase shifted by a different degree amount but all must be referenced at one particular frequency. For example you can have a 90° phase shift on `DQS0T` and have a 60° phase shift on `DQS1T` both referenced from a 200-MHz clock. Not all phase-shift combinations are supported, however. The phase shifts on the same side of the device must all be a multiple of 22.5° (up to 90°), a multiple of 30° (up to 120°), or a multiple of 36° (up to 144°).

In order to generate the correct phase shift with the DLL used, you must provide a clock signal of the same frequency as the DQS signal to the DQS phase-shift circuitry. Any of the `CLK[15..12]p` clock pins can feed the phase circuitry on the top of the device (I/O banks 3 and 4) or any of the `CLK[7..4]p` clock pins can feed the phase circuitry on the bottom of the device (I/O banks 7 and 8). Stratix II and Stratix II GX devices can also use PLLs 5 or 6 as the reference clock to the DQS phase-shift circuitry on the top or bottom of the device, respectively. PLL 5 is connected to the DQS phase-shift circuitry on the top side of the device and PLL 6 is connected to the DQS phase-shift circuitry on the bottom side of the device. Both the top and bottom phase-shift circuits need unique clock pins or PLL clock outputs for the reference clock.



When you have a PLL dedicated only to generate the DLL input reference clock, you must set the PLL mode to "No Compensation" or the Quartus® II software will change it automatically. Because there are no other PLL outputs used, the PLL doesn't need to compensate for any clock paths.

DLL

The DQS phase-shift circuitry uses a delay-locked loop (DLL) to dynamically measure the clock period needed by the DQS/DQSn pin (see Figure 3–10). The DQS phase-shift circuitry then uses the clock period to generate the correct phase shift. The DLL in the Stratix II or Stratix II GX DQS phase-shift circuitry can operate between 100 and 400 MHz. The phase-shift circuitry needs a maximum of 256 clock cycles to calculate the correct input clock period. Data sent during these clock cycles may not be properly captured.



Although the DLL can run up to 400 MHz, other factors may prevent you from interfacing with a 400-MHz external memory device.



You can still use the DQS phase-shift circuitry for any memory interfaces that are less than 100 MHz. The DQS signal will be shifted by 2.5 ns and you can add more shift by using the phase offset module. Even if the DQS signal is not shifted exactly to the middle of the DQ valid window, the IOE should still be able to capture the data in this low frequency application.

There are four different frequency modes for the Stratix II or Stratix II GX DLL. Each frequency mode provides different phase shift, as shown in Table 3–9.

Table 3–9. Stratix II and Stratix II GS DLL Frequency Modes

Frequency Mode	Frequency Range (MHz)	Available Phase Shift	Number of Delay Chains
0	100–175	30, 60, 90, 120	12
1	150–230	22.5, 45, 67.5, 90	16
2	200–310	30, 60, 90, 120	12
3	240–400 (C3 speed grade) 240–350 (C4 and C5 speed grades)	36, 72, 108, 144	10

In frequency mode 0, Stratix II devices use a 6-bit setting to implement the phase-shift delay. In frequency modes 1, 2, and 3, Stratix II devices only use a 5-bit setting to implement the phase-shift delay.

The DLL can be reset from either the logic array or a user I/O pin. This signal is not shown in Figure 3–10. Each time the DLL is reset, you must wait for 256 clock cycles before you can capture the data properly.



The input reference clock for the DQS phase-shift circuitry on the top side of the device can come from CLK[15..12]p or PLL 5. The input reference clock for the DQS phase-shift circuitry on the bottom side of the device can come from CLK[7..4]p or PLL 6.

Table 3–10 lists the maximum delay in the fast timing model for the Stratix II DQS delay buffer. Multiply the number of delay buffers that you are using in the DQS logic block to get the maximum delay achievable in your system. For example, if you implement a 90° phase shift at 200 MHz, you use three delay buffers in mode 2. The maximum achievable delay from the DQS block is then 3 × .416 ps = 1.248 ns.

Table 3–10. DQS Delay Buffer Maximum Delay in Fast Timing Model

Frequency Mode	Maximum Delay Per Delay Buffer (Fast Timing Model)	Unit
0	0.833	ns
1, 2, 3	0.416	ns

Figure 3–10. Simplified Diagram of the DQS Phase-Shift Circuitry *Note (1)*

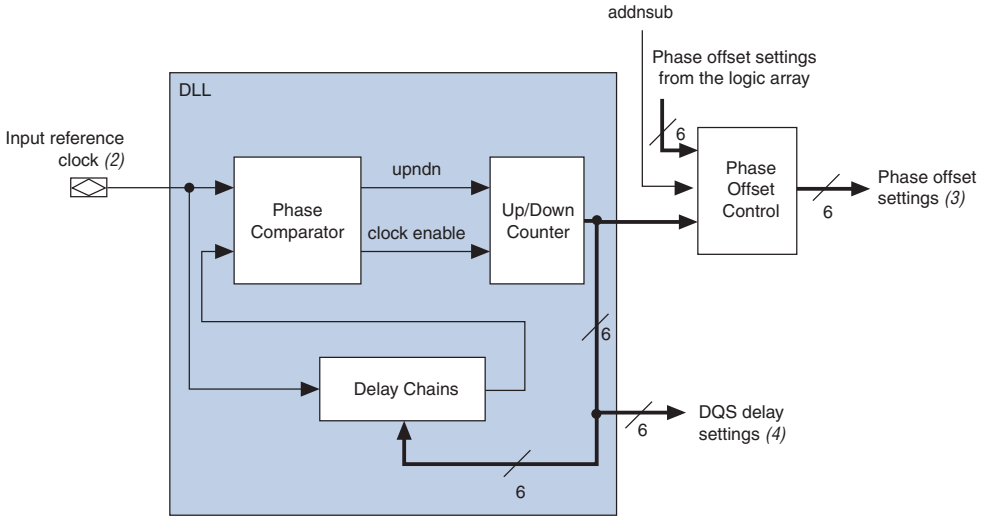

Notes to Figure 3–10:

(1) All features of the DQS phase-shift circuitry are accessible from the altdqs megafunction in the Quartus II software. You should; however, use Altera's memory controller IP Tool Bench to generate the data path for your memory interface.

(2) The input reference clock for the DQS phase-shift circuitry on the top side of the device can come from `CLK[15..12]p` or PLL 5. The input reference clock for the DQS phase-shift circuitry on the bottom side of the device can come from `CLK[7..4]p` or PLL 6.

(3) Phase offset settings can only go to the DQS logic blocks.

(4) DQS delay settings can go to the logic array and/or to the DQS logic block.

The input reference clock goes into the DLL to a chain of up to 16 delay elements. The phase comparator compares the signal coming out of the end of the delay element chain to the input reference clock. The phase comparator then issues the `upndn` signal to the up/down counter. This signal increments or decrements a six-bit delay setting (DQS delay settings) that will increase or decrease the delay through the delay element chain to bring the input reference clock and the signals coming out of the delay element chain in phase.

The DQS delay settings contain the control bits to shift the signal on the input DQS pin by the amount set in the `altdqs` megafunction. For the 0° shift, both the DLL and the DQS logic block are bypassed. Since Stratix II and Stratix II GX DQS and DQ pins are designed such that the pin to IOE delays are matched, the skew between the DQ and DQS pin at the DQ IOE registers is negligible when the 0° shift is implemented. You can feed the DQS delay settings to the DQS logic block and the logic array.

Phase Offset Control

The DQS phase-shift circuitry also contains a phase offset control module that can add or subtract a phase offset amount from the DQS delay setting (phase offset settings from the logic array in Figure 3–10). You should use the phase offset control module for making small shifts to the input signal and use the DQS phase-shift circuitry for larger signal shifts. For example, if you need the input signal to be shifted by 75°, you can set the `altdqs` megafunction to generate a 72° phase shift with a phase offset of +3°.

You can either use a static phase offset or a dynamic phase offset to implement the additional phase shift. The available additional phase shift is implemented in 2s-complement between settings –64 to +63 for frequency mode 0, and between settings –32 to +31 for frequency modes 1, 2, and 3. However, the DQS delay settings are at the maximum at setting 64 for frequency mode 0, and at the maximum at setting 32 for frequency modes 1, 2, and 3. Therefore, the actual physical offset setting range will be 64 or 32 subtracted by the DQS delay settings from the DLL.

For example, if the DLL determines that to achieve 30° you will need a DQS delay setting of 28, you can subtract up to 28 phase offset settings and you can add up to 36 phase offset settings to achieve the optimal delay.



Each phase offset setting translates to a certain delay, as specified in the *DC & Switching Characteristics of Stratix III Devices* chapter in volume 2 of the *Stratix III Device Handbook*.

When using the static phase offset, you can specify the phase offset amount in the `altdqs` megafunction as a positive number for addition or a negative number for subtraction. You can also have a dynamic phase offset that is always added to, subtracted from, or both added to and subtracted from the DLL phase shift. When you always add or subtract, you can dynamically input the phase offset amount into the `dll_offset[5..0]` port. When you want to both add and subtract dynamically, you control the `addnsub` signal in addition to the `dll_offset[5..0]` signals.

DQS Logic Block

Each DQS and DQSn pin is connected to a separate DQS logic block (see Figure 3–11). The logic block contains DQS delay chains and postamble circuitry.

The input reference clock for the DQS phase-shift circuitry on the top side of the device can come from CLK[15..12]p or PLL 5. The input reference clock for the DQS phase-shift circuitry on the bottom side of the device can come from CLK[7..4]p or PLL 6.

Figure 3–11. Simplified Diagram of the DQS Logic Block *Note (1)*

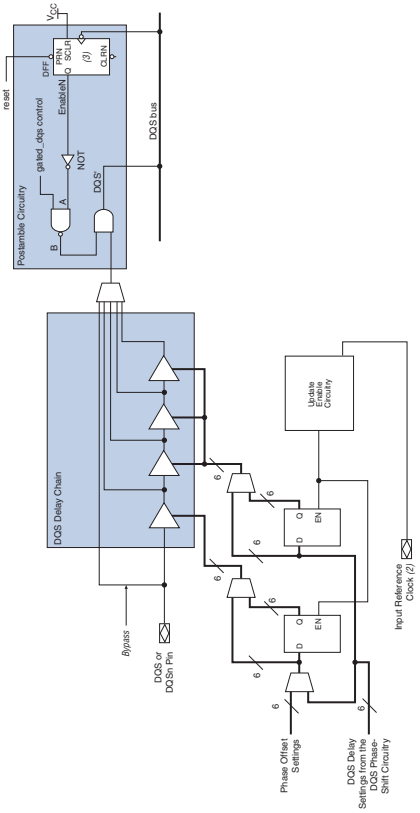

Notes to Figure 3–11:

(1) All features of the DQS logic block are accessible from the altdqs megafunction in the Quartus II software. You should; however, use Altera's memory controller IP Tool Bench to generate the data path for your memory interface.

(2) The input reference clock for the DQS phase-shift circuitry on the top side of the device can come from CLK[15..12]p or PLL 5. The input reference clock for the DQS phase-shift circuitry on the top side of the device can come from CLK[7..4]p or PLL 6.

(3) This register is one of the DQS IOE input registers.

DQS Delay Chains

The DQS delay chains consist of a set of variable delay elements to allow the input DQS and DQSn signals to be shifted by the amount given by the DQS phase-shift circuitry or the logic array. There are four delay elements in the DQS delay chain; the first delay chain closest to the DQS pin can either be shifted by the DQS delay settings or by the sum of the DQS delay setting and the phase-offset setting. The number of delay chains used is transparent to the users because the `altdqs` megafunction automatically sets it. The DQS delay settings can come from the DQS phase-shift circuitry on the same side of the device as the target DQS logic block or from the logic array. When you apply a 0° shift in the `altdqs` megafunction, the DQS delay chains are bypassed.

The delay elements in the DQS logic block mimic the delay elements in the DLL. When the DLL is not used to control the DQS delay chains, you can input your own 6- or 5-bit settings using the `dqs_delayctrlin[5..0]` signals available in the `altdqs` megafunction. These settings control 1, 2, 3, or all 4 delay elements in the DQS delay chains. The amount of delay is equal to the sum of the delay element's intrinsic delay and the product of the number of delay steps and the value of the delay steps.

Both the DQS delay settings and the phase-offset settings pass through a latch before going into the DQS delay chains. The latches are controlled by the update enable circuitry to allow enough time for any changes in the DQS delay setting bits to arrive to all the delay elements. This allows them to be adjusted at the same time. The update enable circuitry enables the latch to allow enough time for the DQS delay settings to travel from the DQS phase-shift circuitry to all the DQS logic blocks before the next change. It uses the input reference clock to generate the update enable output. The `altdqs` megafunction uses this circuit by default. See Figure 3–12 for an example waveform of the update enable circuitry output.

The shifted DQS signal then goes to the DQS bus to clock the IOE input registers of the DQ pins. It can also go into the logic array for resynchronization purposes. The shifted DQSn signal can only go to the active-low input register in the DQ IOE and is only used for QDRII SRAM interfaces.

Figure 3–12. DQS Update Enable Waveform

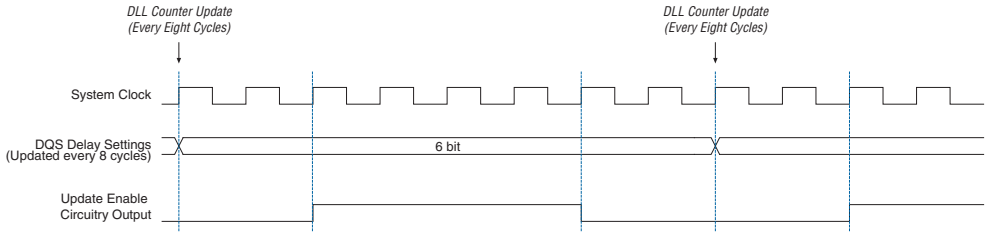

DQS Postamble Circuitry

For external memory interfaces that use a bidirectional read strobe like DDR and DDR2 SDRAM, the DQS signal is low before going to or coming from a high-impedance state. See Figure 3–3. The state where DQS is low, just after a high-impedance state, is called the preamble and the state where DQS is low, just before it returns to a high-impedance state, is called the postamble. There are preamble and postamble specifications for both read and write operations in DDR and DDR2 SDRAM. The DQS postamble circuitry ensures data is not lost when there is noise on the DQS line at the end of a read postamble time. It is to be used with one of the DQS IOE input registers such that the DQS postamble control signal can ground the shifted DQS signal used to clock the DQ input registers at the end of a read operation. This ensures that any glitches on the DQS input signals at the end of the read postamble time do not affect the DQ IOE registers.

See *AN 327: Interfacing DDR SDRAM with Stratix II Devices* and *AN 328: Interfacing DDR2 SDRAM with Stratix II Devices* for more details.

DDR Registers

Each IOE in a Stratix II or Stratix II GX device contains six registers and one latch. Two registers and a latch are used for input, two registers are used for output, and two registers are used for output enable control. The second output enable register provides the write preamble for the DQS strobe in the DDR external memory interfaces. This active low output enable register extends the high-impedance state of the pin by a half clock cycle to provide the external memory's DQS write preamble time specification. Figure 3–13 shows the six registers and the latch in the Stratix II or Stratix II GX IOE and Figure 3–14 shows how the second OE register extends the DQS high-impedance state by half a clock cycle during a write operation.

Figure 3–13. Bidirectional DDR I/O Path in Stratix II and Stratix II GX Devices *Note (1)*

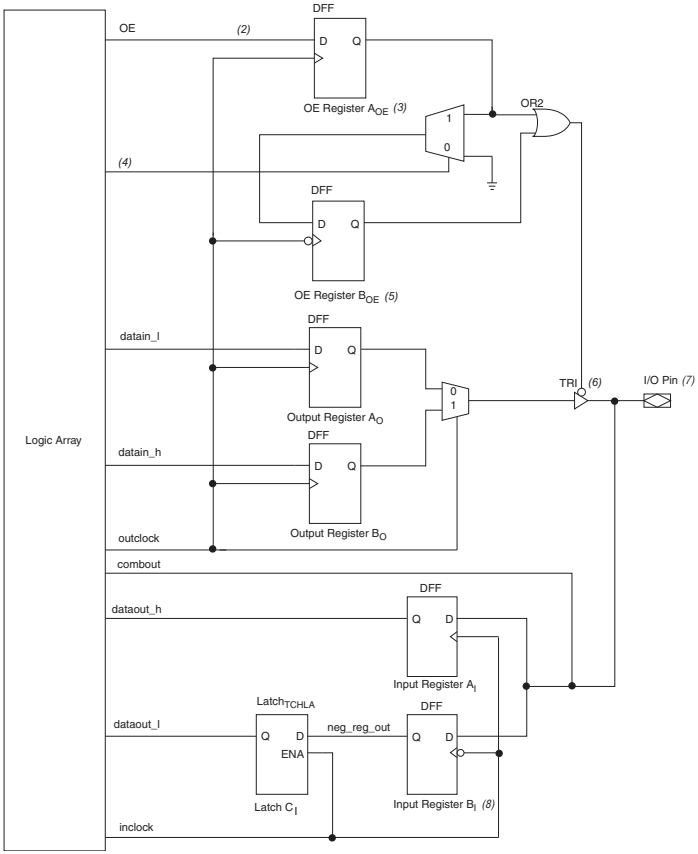

Notes to Figure 3–13:

(1) All control signals can be inverted at the IOE. The signal names used here match with Quartus II software naming convention.

(2) The OE signal is active low, but the Quartus II software implements this as active high and automatically adds an inverter before input to the A_{OE} register during compilation.

(3) The A_{OE} register generates the enable signal for general-purpose DDR I/O applications.

(4) This select line is to choose whether the OE signal should be delayed by half-a-clock cycle.

(5) The B_{OE} register generates the delayed enable signal for the write strobes or write clocks for memory interfaces.

(6) The tristate enable is by default active low. You can, however, design it to be active high. The combinational control path for the tristate is not shown in this diagram.

(7) You can also have combinational output to the I/O pin; this path is not shown in the diagram.

(8) On the top and bottom I/O banks, the clock to this register can be an inverted register A's clock or a separate clock (inverted or non-inverted). On the side I/O banks, you can only use the inverted register A's clock for this port.

Figure 3–14. Extending the OE Disable by Half-a-Clock Cycle for a Write Transaction *Note (1)*

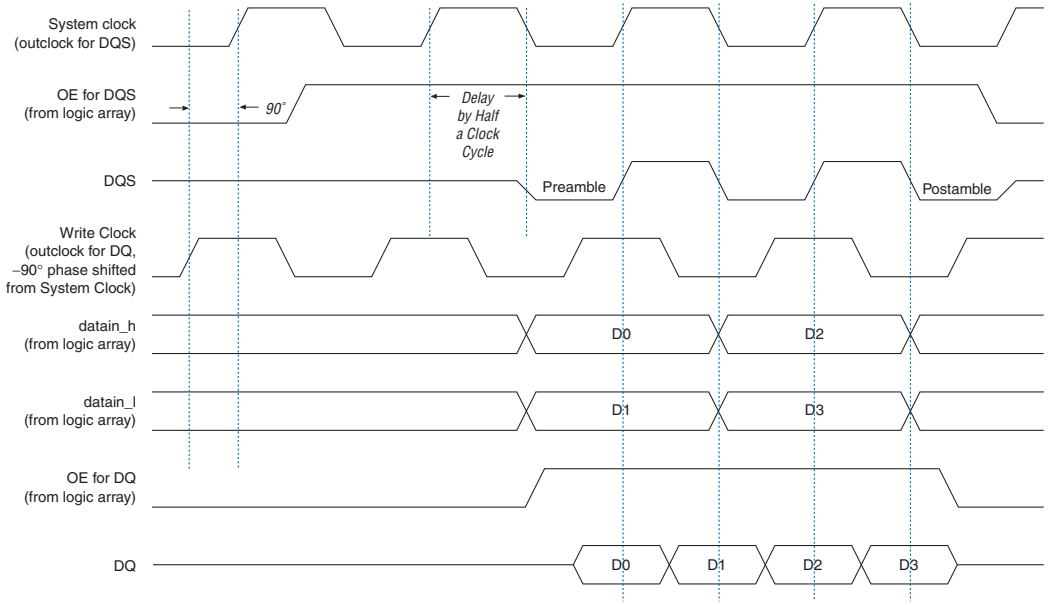

Note to Figure 3–14:

(1) The waveform reflects the software simulation result. The OE signal is an active low on the device. However, the Quartus II software implements this signal as an active high and automatically adds an inverter before the A_{OE} register D input.

Figures 3–15 and 3–16 summarize the IOE registers used for the DQ and DQS signals.

Figure 3–15. DQ Configuration in Stratix II or Stratix II GX IOE *Note (1)*

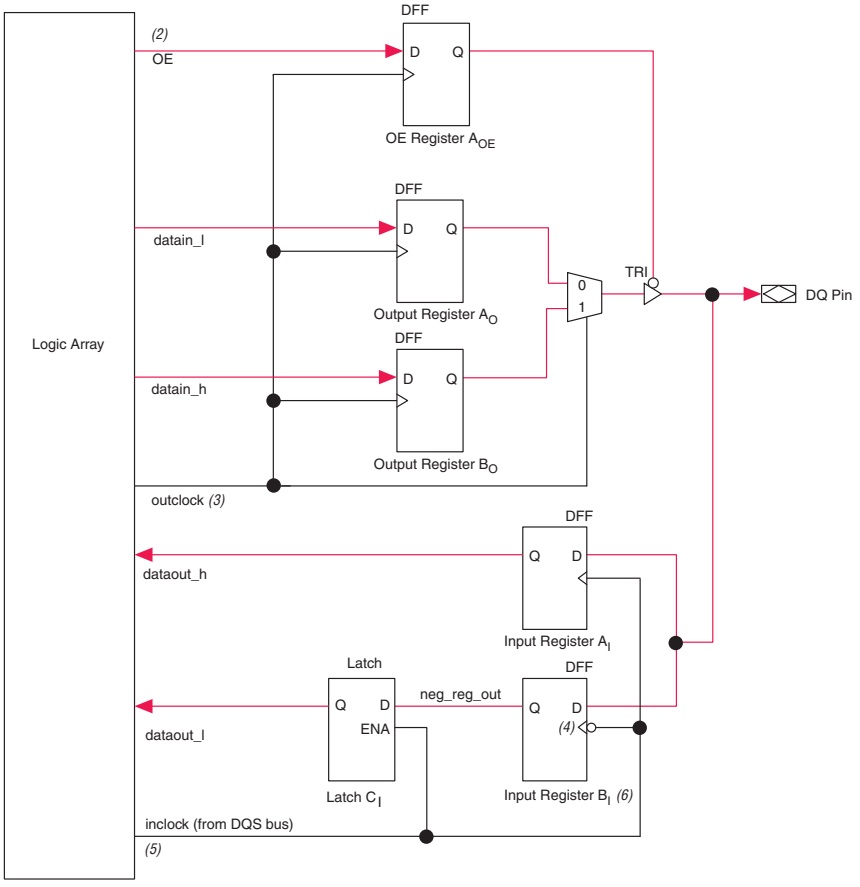

Notes to Figure 3–15:

(1) You can use the `altdq` megafunction to generate the DQ signals. You should, however, use Altera's memory controller IP Tool Bench to generate the data path for your memory interface. The signal names used here match with Quartus II software naming convention.

(2) The `OE` signal is active low, but the Quartus II software implements this as active high and automatically adds an inverter before the `OE` register A_{OE} during compilation.

(3) The `outclock` signal for DDR, DDR2 SDRAM, and QDRII SRAM interfaces has a 90° phase-shift relationship with the system clock. For 300-MHz RLDRAM II interfaces with EP2S60F1020C3, Altera recommends a 75° phase-shift relationship.

(4) The shifted DQS or DQSn signal can clock this register. Only use the DQSn signal for QDRII SRAM interfaces.

(5) The shifted DQS signal must be inverted before going to the DQ IOE. The inversion is automatic if you use the `altdq` megafunction to generate the DQ signals. Connect this port to the `combout` port in the `altdqs` megafunction.

(6) On the top and bottom I/O banks, the clock to this register can be an inverted register A's clock or a separate clock (inverted or non-inverted). On the side I/O banks, you can only use the inverted register A's clock for this port.

Figure 3–16. DQS Configuration in Stratix II or Stratix II GX IOE *Note (1)*

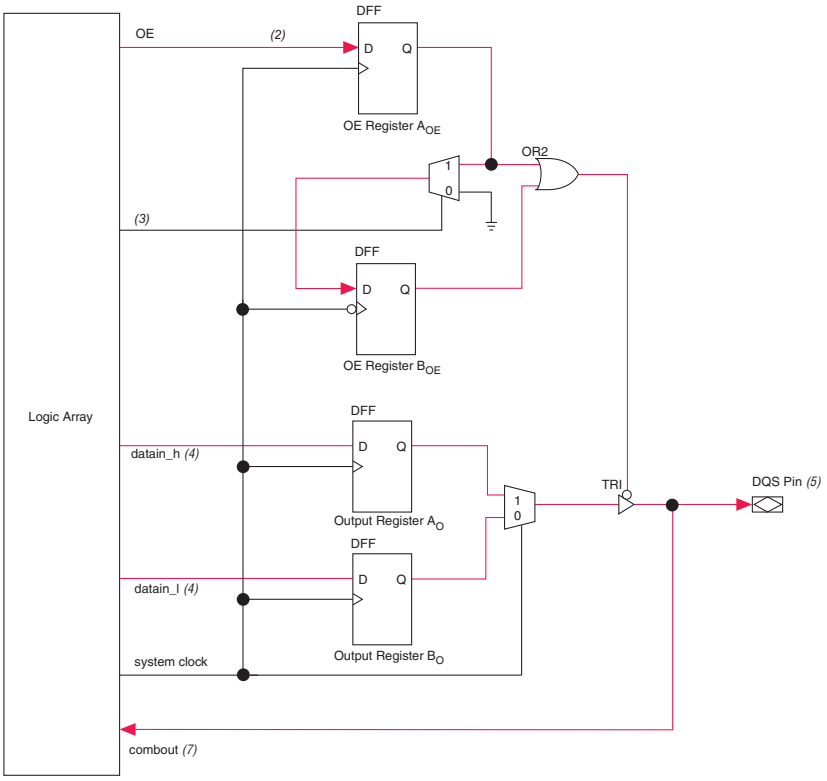

Notes to Figure 3–16:

(1) You can use the `altdqs` megafunction to generate the DQS signals. You should, however, use Altera's memory controller IP Tool Bench to generate the data path for your memory interface. The signal names used here match with Quartus II software naming convention.

(2) The `OE` signal is active low, but the Quartus II software implements this as active high and automatically adds an inverter before `OE` register A_{OE} during compilation. In RLDRAM II and QDRII SRAM, the `OE` signal is always disabled.

(3) The select line can be chosen in the `altdqs` megafunction.

(4) The `datain_l` and `datain_h` pins are usually connected to ground and V_{CC}, respectively.

(5) DQS postamble circuitry and handling is not shown in this diagram. For more information, see *AN 327: Interfacing DDR SDRAM with Stratix II Devices* and *AN 328: Interfacing DDR2 SDRAM with Stratix II Devices*.

(6) DQS logic blocks are only available with DQS and DQSn pins.

(7) You must invert this signal before it reaches the DQ IOE. This signal is automatically inverted if you use the `altdq` megafunction to generate the DQ signals. Connect this port to the `inclock` port in the `altdq` megafunction.

For interfaces to DDR SDRAM, DDR2 SDRAM, and RLDRAM II, the Stratix II or Stratix II GX DDR IOE structure requires you to invert the incoming DQS signal to ensure proper data transfer. This is not required for QDRII SRAM interfaces if the CQ signal is wired to the DQS pin and the CQ# signal is wired to the DQSn pin. The `altdq` megafunction, by default, adds the inverter to the `inclock` port when it generates DQ blocks. The megafunction also includes an option to remove the inverter for QDRII SRAM interfaces. As shown in Figure 3–13, the `inclock` signal's rising edge clocks the A_I register, `inclock` signal's falling edge clocks the B_I register, and latch C_I is opened when `inclock` is 1. In a DDR memory read operation, the last data coincides with DQS being low. If you do not invert the DQS pin, you will not get this last data as the latch does not open until the next rising edge of the DQS signal.

Figure 3–17 shows waveforms of the circuit shown in Figure 3–15.

The first set of waveforms in Figure 3–17 shows the edge-aligned relationship between the DQ and DQS signals at the Stratix II or Stratix II GX device pins. The second set of waveforms in Figure 3–17 shows what happens if the shifted DQS signal is not inverted; the last data, D_n, does not get latched into the logic array as DQS goes to tristate after the read postamble time. The third set of waveforms in Figure 3–17 shows a proper read operation with the DQS signal inverted after the 90° shift; the last data, D_n, does get latched. In this case the outputs of register A_I and latch C_I, which correspond to `dataout_h` and `dataout_l` ports, are now switched because of the DQS inversion. Register A_I, register B_I, and latch C_I refer to the nomenclature in Figure 3–15.

Figure 3–17. DQ Captures with Non-Inverted and Inverted Shifted DQS

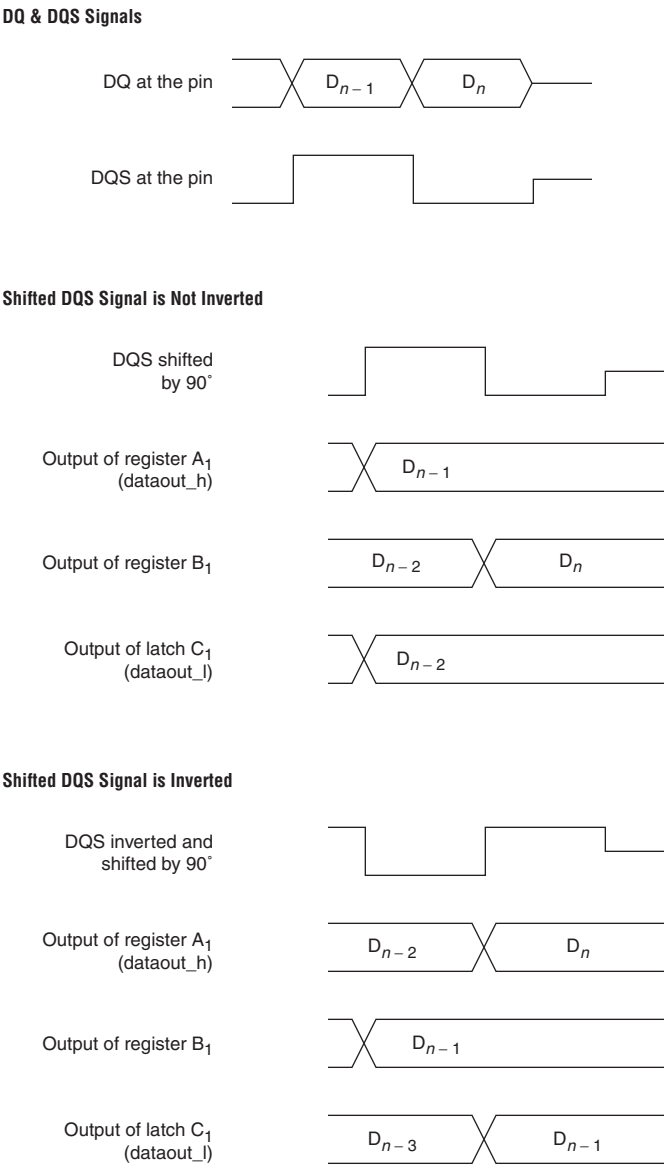

PLL

When using the Stratix II and Stratix II GX top and bottom I/O banks (I/O banks 3, 4, 7, or 8) to interface with a DDR memory, at least one PLL with two outputs is needed to generate the system clock and the write clock. The system clock generates the DQS write signals, commands, and addresses. The write clock is either shifted by –90° or 90° from the system clock and is used to generate the DQ signals during writes.

For DDR and DDR2 SDRAM interfaces above 200 MHz, Altera also recommends a second read PLL to help ease resynchronization.

When using the Stratix II and Stratix II GX side I/O banks 1, 2, 5, or 6 to interface with DDR SDRAM devices, two PLLs may be needed per I/O bank for best performance. Since the side I/O banks do not have dedicated circuitry, one PLL captures data from the DDR SDRAM and another PLL generates the write signals, commands, and addresses to the DDR SDRAM device. Stratix II and Stratix II GX side I/O banks can support DDR SDRAM up to 150 MHz.

Enhancements In Stratix II and Stratix II GX Devices

Stratix II and Stratix II GX external memory interfaces support differs from Stratix external memory interfaces support in the following ways:

- A PLL output can now be used as the input reference clock to the DLL.
- The shifted DQS signal can now go into the logic array.
- The DLL in Stratix II and Stratix II GX devices has more phase-shift options than in Stratix devices. It also has the option to add phase offset settings.
- Stratix II and Stratix II GX devices have DQS logic blocks with each DQS pin that helps with fine tuning the phase shift.
- The DQS delay settings can be routed from the DLL into the logic array. You can also bypass the DLL and send the DQS delay settings from the logic array to the DQS logic block.
- Stratix II and Stratix II GX devices support DQSn pins.
- The DQS/DQ groups now support ×4, ×9, ×18, and ×36 bus modes.
- The DQS pins have been enhanced with the DQS postamble circuitry.

Conclusion

Stratix II and Stratix II GX devices support SDR SDRAM, DDR SDRAM, DDR2 SDRAM, RLDRAM II, and QDRII SRAM external memories. Stratix II and Stratix II GX devices feature high-speed interfaces that transfer data between external memory devices at up to 300 MHz/600 Mbps. DQS phase-shift circuitry and DQS logic blocks within the Stratix II and Stratix II GX devices allow you to fine-tune the phase shifts for the input clocks or strobes to properly align clock edges as needed to capture data.

Referenced Documents

This chapter references the following documents:

- *AN 325: Interfacing RLDRAM II with Stratix II & Stratix GX Devices*
- *AN 326: Interfacing QDRII & QDRII+ SRAM with Stratix II, Stratix, & Stratix GX Devices*
- *AN 327: Interfacing DDR SDRAM with Stratix II Devices*
- *AN 328: Interfacing DDR2 SDRAM with Stratix II Devices*
- *DC & Switching Characteristics of Stratix III Devices* chapter in volume 2 of the *Stratix III Device Handbook*

Document Revision History

Table 3–11 shows the revision history for this chapter.

Table 3–11. Document Revision History

Date and Document Version	Changes Made	Summary of Changes
January 2008, v4.5	Added the "Referenced Documents" section.	—
	Minor text edits.	
No change	For the *Stratix II GX Device Handbook* only: Formerly chapter 8. The chapter number changed due to the addition of the *Stratix II GX Dynamic Reconfiguration* chapter. No content change.	—
May 2007, v4.4	Updated the "Phase Offset Control" section.	—
	Updated Figure 3–2.	—
	Updated Table 3–1.	—
	Added Table 3–4 and Table 3–6.	—
	Updated *Note (1)* to Figure 3–10.	—
February 2007 v4.3	Added the "Document Revision History" section to this chapter.	—
April 2006, v4.2	Chapter updated as part of the *Stratix II Device Handbook* update.	—
No change	Formerly chapter 7. Chapter number change only due to chapter addition to Section I in February 2006; no content change.	—
December 2005 v4.1	Chapter updated as part of the *Stratix II Device Handbook* update.	—
October 2005 v4.0	Added chapter to the *Stratix II GX Device Handbook*.	—

Section III. I/O Standards

This section provides information on Stratix® II single-ended, voltage-referenced, and differential I/O standards.

This section contains the following chapters:

- Chapter 4, Selectable I/O Standards in Stratix II and Stratix II GX Devices
- Chapter 5, High-Speed Differential I/O Interfaces with DPA in Stratix II and Stratix II GX Devices

Revision History

Refer to each chapter for its own specific revision history. For information on when each chapter was updated, refer to the Chapter Revision Dates section, which appears in the full handbook.

4. Selectable I/O Standards in Stratix II and Stratix II GX Devices

SII52004-4.6

Introduction

This chapter provides guidelines for using industry I/O standards in Stratix® II and Stratix II GX devices, including:

- I/O features
- I/O standards
- External memory interfaces
- I/O banks
- Design considerations

Stratix II and Stratix II GX I/O Features

Stratix II and the Stratix II GX devices contain an abundance of adaptive logic modules (ALMs), embedded memory, high-bandwidth digital signal processing (DSP) blocks, and extensive routing resources, all of which can operate at very high core speed.

Stratix II and Stratix II GX devices I/O structure is designed to ensure that these internal capabilities are fully utilized. There are numerous I/O features to assist in high-speed data transfer into and out of the device including:

- Single-ended, non-voltage-referenced and voltage-referenced I/O standards
- High-speed differential I/O standards featuring serializer/deserializer (SERDES), dynamic phase alignment (DPA), capable of 1 gigabit per second (Gbps) performance for low-voltage differential signaling (LVDS), Hypertransport technology, HSTL, SSTL, and LVPECL

  

  HSTL and SSTL I/O standards are used only for PLL clock inputs and outputs in differential mode. LVPECL is supported on clock input and outputs of the top and bottom I/O banks.

- Double data rate (DDR) I/O pins
- Programmable output drive strength for voltage-referenced and non-voltage-referenced single-ended I/O standards
- Programmable bus-hold
- Programmable pull-up resistor
- Open-drain output
- On-chip series termination
- On-chip parallel termination

- On-chip differential termination
- Peripheral component interconnect (PCI) clamping diode
- Hot socketing



For a detailed description of each I/O feature, refer to the *Stratix II Architecture* chapter in volume 1 of the *Stratix II Device Handbook* or the *Stratix II GX Architecture* chapter in volume 1 of the *Stratix II GX Device Handbook*.

Stratix II and Stratix II GX I/O Standards Support

Stratix II and Stratix II GX devices support a wide range of industry I/O standards. Table 4–1 shows which I/O standards Stratix II devices support as well as typical applications.

Table 4–1. Stratix II and Stratix II GX I/O Standard Applications (Part 1 of 2)

I/O Standard	Application
LVTTL	General purpose
LVCMOS	General purpose
2.5 V	General purpose
1.8 V	General purpose
1.5 V	General purpose
3.3-V PCI	PC and embedded system
3.3-V PCI-X	PC and embedded system
SSTL-2 Class I	DDR SDRAM
SSTL-2 Class II	DDR SDRAM
SSTL-18 Class I	DDR2 SDRAM
SSTL-18 Class II	DDR2 SDRAM
1.8-V HSTL Class I	QDRII SRAM/RLDRAM II/SRAM
1.8-V HSTL Class II	QDRII SRAM/RLDRAM II/SRAM
1.5-V HSTL Class I	QDRII SRAM/SRAM
1.5-V HSTL Class II	QDRII SRAM/SRAM
1.2-V HSTL	General purpose
Differential SSTL-2 Class I	DDR SDRAM
Differential SSTL-2 Class II	DDR SDRAM
Differential SSTL-18 Class I	DDR2 SDRAM
Differential SSTL-18 Class II	DDR2 SDRAM
1.8-V differential HSTL Class I	Clock interfaces
1.8-V differential HSTL Class II	Clock interfaces
1.5-V differential HSTL Class I	Clock interfaces

Table 4–1. Stratix II and Stratix II GX I/O Standard Applications (Part 2 of 2)

I/O Standard	Application
1.5-V differential HSTL Class II	Clock interfaces
LVDS	High-speed communications
HyperTransport™ technology	PCB interfaces
Differential LVPECL	Video graphics and clock distribution

Single-Ended I/O Standards

In non-voltage-referenced single-ended I/O standards, the voltage at the input must be above a set voltage to be considered "on" (high, or logic value 1) or below another voltage to be considered "off" (low, or logic value 0). Voltages between the limits are undefined logically, and may fall into either a logic value 0 or 1. The non-voltage-referenced single-ended I/O standards supported by Stratix II and Stratix II GX devices are:

- Low-voltage transistor-transistor logic (LVTTL)
- Low-voltage complementary metal-oxide semiconductor (LVCMOS)
- 1.5 V
- 1.8 V
- 2.5 V
- 3.3-V PCI
- 3.3-V PCI-X

Voltage-referenced, single-ended I/O standards provide faster data rates. These standards use a constant reference voltage at the input levels. The incoming signals are compared with this constant voltage and the difference between the two defines "on" and "off" states.



Stratix II and Stratix II GX devices support stub series terminated logic (SSTL) and high-speed transceiver logic (HSTL) voltage-referenced I/O standards.

LVTTL

The LVTTL standard is formulated under EIA/JEDEC Standard, JESD8-B (Revision of JESD8-A): Interface Standard for Nominal 3-V/3.3-V Supply Digital Integrated Circuits.

The standard defines DC interface parameters for digital circuits operating from a 3.0- or 3.3-V power supply and driving or being driven by LVTTL-compatible devices. The 3.3-V LVTTL standard is a

general-purpose, single-ended standard used for 3.3-V applications. This I/O standard does not require input reference voltages (V_{REF}) or termination voltages (V_{TT}).



Stratix II and Stratix II GX devices support both input and output levels for 3.3-V LVTTL operation.

Stratix II Stratix II GX devices support a V_{CCIO} voltage level of 3.3 V ± 5% as specified as the narrow range for the voltage supply by the EIA/JEDEC standard.

LVCMOS

The LVCMOS standard is formulated under EIA/JEDEC Standard, JESD8-B (Revision of JESD8-A): Interface Standard for Nominal 3-V/3.3-V Supply Digital Integrated Circuits.

The standard defines DC interface parameters for digital circuits operating from a 3.0- or 3.3-V power supply and driving or being driven by LVCMOS-compatible devices. The 3.3-V LVCMOS I/O standard is a general-purpose, single-ended standard used for 3.3-V applications. While LVCMOS has its own output specification, it specifies the same input voltage requirements as LVTTL. These I/O standards do not require V_{REF} or V_{TT}.



Stratix II and Stratix II GX devices support both input and output levels for 3.3-V LVCMOS operation.

Stratix II and Stratix II GX devices support a V_{CCIO} voltage level of 3.3 V ± 5% as specified as the narrow range for the voltage supply by the EIA/JEDEC standard.

2.5 V

The 2.5-V I/O standard is formulated under EIA/JEDEC Standard, EIA/JESD8-5: 2.5-V± 0.2-V (Normal Range), and 1.8-V – 2.7-V (Wide Range) Power Supply Voltage and Interface Standard for Non-Terminated Digital Integrated Circuit.

The standard defines the DC interface parameters for high-speed, low-voltage, non-terminated digital circuits driving or being driven by other 2.5-V devices. This standard is a general-purpose, single-ended standard used for 2.5-V applications. It does not require the use of a V_{REF} or a V_{TT}.

Stratix II and Stratix II GX devices support both input and output levels for 2.5-V operation with V_{CCIO} voltage level support of 2.5 V ± 5%, which is narrower than defined in the Normal Range of the EIA/JEDEC standard.

1.8 V

The 1.8-V I/O standard is formulated under EIA/JEDEC Standard, EIA/JESD8-7: 1.8-V± 0.15-V (Normal Range), and 1.2-V – 1.95-V (Wide Range) Power Supply Voltage and Interface Standard for Non-Terminated Digital Integrated Circuit.

The standard defines the DC interface parameters for high-speed, low-voltage, non-terminated digital circuits driving or being driven by other 1.8-V devices. This standard is a general-purpose, single-ended standard used for 1.8-V applications. It does not require the use of a V_{REF} or a V_{TT}.

Stratix II and Stratix II GX devices support both input and output levels for 1.8-V operation with V_{CCIO} voltage level support of 1.8 V ± 5%, which is narrower than defined in the Normal Range of the EIA/JEDEC standard.

1.5 V

The 1.5-V I/O standard is formulated under EIA/JEDEC Standard, JESD8-11: 1.5-V± 0.1-V (Normal Range) and 0.9-V – 1.6-V (Wide Range) Power Supply Voltage and Interface Standard for Non-Terminated Digital Integrated Circuit.

The standard defines the DC interface parameters for high-speed, low-voltage, non-terminated digital circuits driving or being driven by other 1.5-V devices. This standard is a general-purpose, single-ended standard used for 1.5-V applications. It does not require the use of a V_{REF} or a V_{TT}.

Stratix II and Stratix II GX devices support both input and output levels for 1.5-V operation V_{CCIO} voltage level support of 1.5 V ± 5%, which is narrower than defined in the Normal Range of the EIA/JEDEC standard.

3.3-V PCI

The 3.3-V PCI I/O standard is formulated under PCI Local Bus Specification Revision 2.2 developed by the PCI Special Interest Group (SIG).

The PCI local bus specification is used for applications that interface to the PCI local bus, which provides a processor-independent data path between highly integrated peripheral controller components, peripheral add-in boards, and processor/memory systems. The conventional PCI specification revision 2.2 defines the PCI hardware environment including the protocol, electrical, mechanical, and configuration specifications for the PCI devices and expansion boards. This standard requires 3.3-V $V_{CCIO.}$ Stratix II and Stratix II GX devices are fully compliant with the 3.3-V PCI Local Bus Specification Revision 2.2 and meet 64-bit/66-MHz operating frequency and timing requirements.



The 3.3-V PCI standard does not require input reference voltages or board terminations. Stratix II and Stratix II GX devices support both input and output levels.

3.3-V PCI-X

The 3.3-V PCI-X I/O standard is formulated under PCI-X Local Bus Specification Revision 1.0a developed by the PCI SIG.

The PCI-X 1.0 standard is used for applications that interface to the PCI local bus. The standard enables the design of systems and devices that operate at clock speeds up to 133 MHz, or 1 Gbps for a 64-bit bus. The PCI-X 1.0 protocol enhancements enable devices to operate much more efficiently, providing more usable bandwidth at any clock frequency. By using the PCI-X 1.0 standard, you can design devices to meet PCI-X 1.0 requirements and operate as conventional 33- and 66-MHz PCI devices when installed in those systems. This standard requires 3.3-V V_{CCIO}. Stratix II and Stratix II GX devices are fully compliant with the 3.3-V PCI-X Specification Revision 1.0a and meet the 133-MHz operating frequency and timing requirements. The 3.3-V PCI-X standard does not require input reference voltages or board terminations.



Stratix II and Stratix II GX devices support both input and output levels operation.

SSTL-2 Class I and SSTL-2 Class II

The 2.5-V SSTL-2 standard is formulated under JEDEC Standard, JESD8-9A: Stub Series Terminated Logic for 2.5-V (SSTL_2).

The SSTL-2 I/O standard is a 2.5-V memory bus standard used for applications such as high-speed DDR SDRAM interfaces. This standard defines the input and output specifications for devices that operate in the SSTL-2 logic switching range of 0.0 to 2.5 V. This standard improves

operation in conditions where a bus must be isolated from large stubs. SSTL-2 requires a 1.25-V V_{REF} and a 1.25-V V_{TT} to which the series and termination resistors are connected (Figures 4–1 and 4–2).



Stratix II and Stratix II GX devices support both input and output levels operation.

Figure 4–1. 2.5-V SSTL Class I Termination

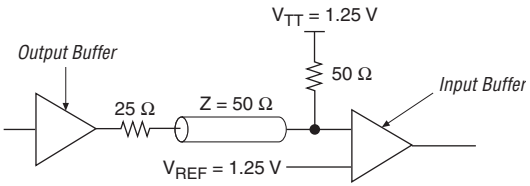

Figure 4–2. 2.5-V SSTL Class II Termination

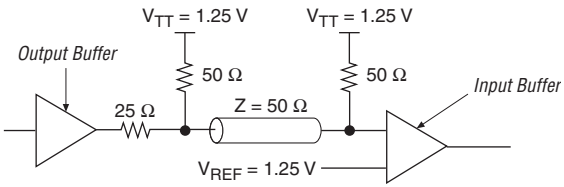

SSTL-18 Class I and SSTL-18 Class II

The 1.8-V SSTL-18 standard is formulated under JEDEC Standard, JESD8-15: Stub Series Terminated Logic for 1.8-V (SSTL_18).

The SSTL-18 I/O standard is a 1.8-V memory bus standard used for applications such as high-speed DDR2 SDRAM interfaces. This standard is similar to SSTL-2 and defines input and output specifications for devices that are designed to operate in the SSTL-18 logic switching range 0.0 to 1.8 V. SSTL-18 requires a 0.9-V V_{REF} and a 0.9-V V_{TT} to which the series and termination resistors are connected.

There are no class definitions for the SSTL-18 standard in the JEDEC specification. The specification of this I/O standard is based on an environment that consists of both series and parallel terminating resistors. Altera provides solutions to two derived applications in JEDEC specification, and names them Class I and Class II to be consistent with other SSTL standards. Figures 4–3 and 4–4 show SSTL-18 Class I and II termination, respectively.

Stratix II and Stratix II GX devices support both input and output levels operation.

Figure 4–3. 1.8-V SSTL Class I Termination

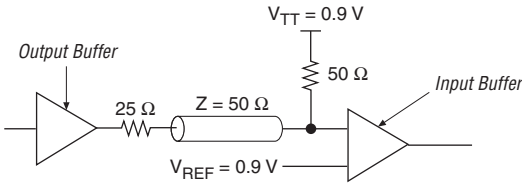

Figure 4–4. 1.8-V SSTL Class II Termination

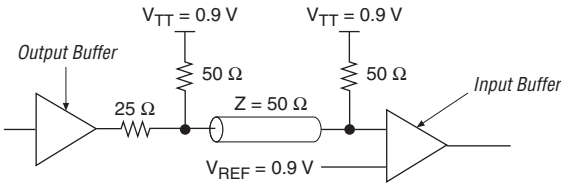

1.8-V HSTL Class I and 1.8-V HSTL Class II

The HSTL standard is a technology-independent I/O standard developed by JEDEC to provide voltage scalability. It is used for applications designed to operate in the 0.0- to 1.8-V HSTL logic switching range such as quad data rate (QDR) memory clock interfaces.

Although JEDEC specifies a maximum V_{CCIO} value of 1.6 V, there are various memory chip vendors with HSTL standards that require a V_{CCIO} of 1.8 V. Stratix II and Stratix II GX devices support interfaces to chips with V_{CCIO} of 1.8 V for HSTL. Figures 4–5 and 4–6 show the nominal V_{REF} and V_{TT} required to track the higher value of V_{CCIO}. The value of V_{REF} is selected to provide optimum noise margin in the system.

Stratix II and Stratix II GX devices support both input and output levels operation.

Figure 4–5. 1.8-V HSTL Class I Termination

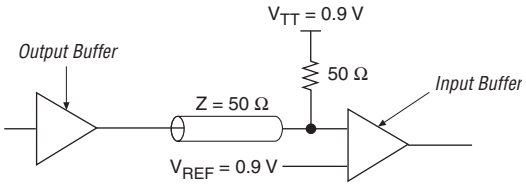

Figure 4–6. 1.8-V HSTL Class II Termination

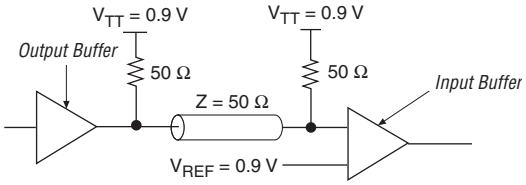

1.5-V HSTL Class I and 1.5-V HSTL Class II

The 1.5-V HSTL standard is formulated under EIA/JEDEC Standard, EIA/JESD8-6: A 1.5-V Output Buffer Supply Voltage Based Interface Standard for Digital Integrated Circuits.

The 1.5-V HSTL I/O standard is used for applications designed to operate in the 0.0- to 1.5-V HSTL logic nominal switching range. This standard defines single-ended input and output specifications for all HSTL-compliant digital integrated circuits. The 1.5-V HSTL I/O standard in Stratix II and Stratix II GX devices are compatible with the 1.8-V HSTL I/O standard in APEX™ 20KE, APEX 20KC, and in Stratix II and Stratix II GX devices themselves because the input and output voltage thresholds are compatible (Figures 4–7 and 4–8).

☞ Stratix II and Stratix II GX devices support both input and output levels with V_{REF} and V_{TT}.

Figure 4–7. 1.5-V HSTL Class I Termination

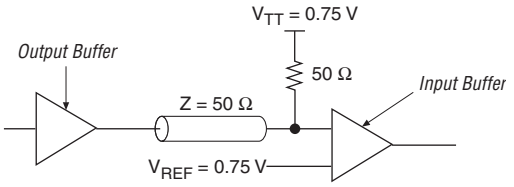

Figure 4–8. 1.5-V HSTL Class II Termination

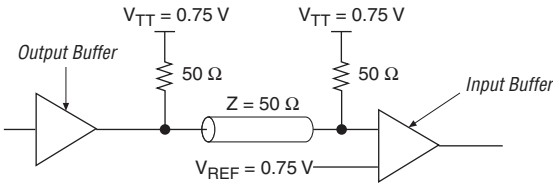

1.2-V HSTL

Although there is no EIA/JEDEC standard available for the 1.2-V HSTL standard, Altera supports it for applications that operate in the 0.0 to 1.2-V HSTL logic nominal switching range. 1.2-V HSTL can be terminated through series or parallel on-chip termination (OCT). Figure 4–9 shows the termination scheme.

Figure 4–9. 1.2-V HSTL Termination

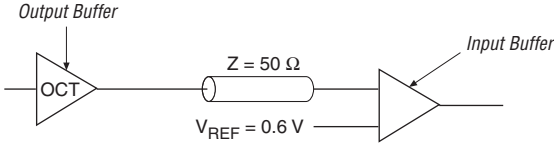

Differential I/O Standards

Differential I/O standards are used to achieve even faster data rates with higher noise immunity. Apart from LVDS, LVPECL, and HyperTransport technology, Stratix II and Stratix II GX devices also support differential versions of SSTL and HSTL standards.

For detailed information on differential I/O standards, refer to the *High-Speed Differential I/O Interfaces with DPA in Stratix II & Stratix II GX Devices* chapter in volume 2 of the *Stratix II Device Handbook* or *High-Speed Differential I/O Interfaces with DPA in Stratix II & Stratix II GX Devices* chapter in volume 2 of the *Stratix II GX Device Handbook*.

Differential SSTL-2 Class I and Differential SSTL-2 Class II

The 2.5-V differential SSTL-2 standard is formulated under JEDEC Standard, JESD8-9A: Stub Series Terminated Logic for 2.5-V (SSTL_2).

This I/O standard is a 2.5-V standard used for applications such as high-speed DDR SDRAM clock interfaces. This standard supports differential signals in systems using the SSTL-2 standard and supplements the SSTL-2 standard for differential clocks. Stratix II and Stratix II GX devices support both input and output levels. Figures 4–10 and 4–11 shows details on differential SSTL-2 termination.

Stratix II and Stratix II GX devices support differential SSTL-2 I/O standards in pseudo-differential mode, which is implemented by using two SSTL-2 single-ended buffers.

The Quartus® II software only supports pseudo-differential standards on the `INCLK`, `FBIN` and `EXTCLK` ports of enhanced PLL, as well as on DQS pins when DQS megafunction (ALTDQS, Bidirectional Data Strobe) is used. Two single-ended output buffers are automatically programmed to have opposite polarity so as to implement a pseudo-differential output. A proper V_{REF} voltage is required for the two single-ended input buffers to implement a pseudo-differential input. In this case, only the positive polarity input is used in the speed path while the negative input is not connected internally. In other words, only the non-inverted pin is required to be specified in your design, while the Quartus II software automatically generates the inverted pin for you.

Although the Quartus II software does not support pseudo-differential SSTL-2 I/O standards on the left and right I/O banks, you can implement these standards at these banks. You need to create two pins in the designs and configure the pins with single-ended SSTL-2 standards. However, this is limited only to pins that support the differential pin-pair I/O function and is dependent on the single-ended SSTL-2 standards support at these banks.

Figure 4–10. Differential SSTL-2 Class I Termination

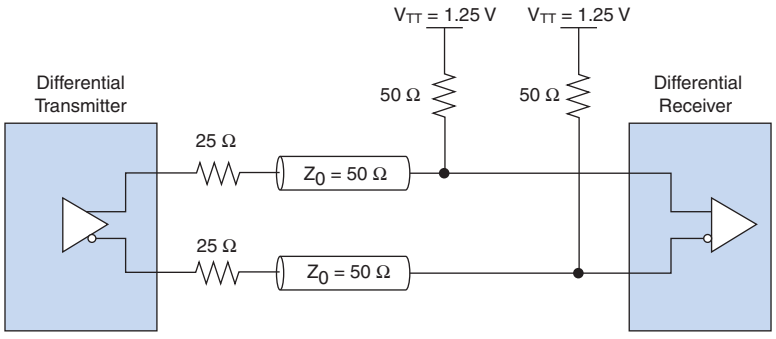

Figure 4–11. Differential SSTL-2 Class II Termination

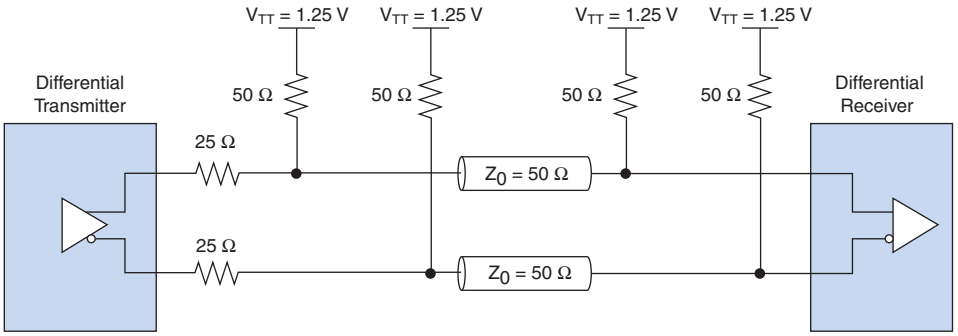

Differential SSTL-18 Class I and Differential SSTL-18 Class II

The 1.8-V differential SSTL-18 standard is formulated under JEDEC Standard, JESD8-15: Stub Series Terminated Logic for 1.8-V (SSTL_18).

The differential SSTL-18 I/O standard is a 1.8-V standard used for applications such as high-speed DDR2 SDRAM interfaces. This standard supports differential signals in systems using the SSTL-18 standard and supplements the SSTL-18 standard for differential clocks.

Stratix II and Stratix II GX devices support both input and output levels operation.

Figures 4–12 and 4–13 shows details on differential SSTL-18 termination. Stratix II and Stratix II GX devices support differential SSTL-18 I/O standards in pseudo-differential mode, which is implemented by using two SSTL-18 single-ended buffers.

The Quartus II software only supports pseudo-differential standards on the `INCLK`, `FBIN` and `EXTCLK` ports of enhanced PLL, as well as on DQS pins when DQS megafunction (ALTDQS, Bidirectional Data Strobe) is used. Two single-ended output buffers are automatically programmed to have opposite polarity so as to implement a pseudo-differential output. A proper V_{REF} voltage is required for the two single-ended input buffers to implement a pseudo-differential input. In this case, only the positive polarity input is used in the speed path while the negative input is not connected internally. In other words, only the non-inverted pin is required to be specified in your design, while the Quartus II software automatically generates the inverted pin for you.

Although the Quartus II software does not support pseudo-differential SSTL-18 I/O standards on the left and right I/O banks, you can implement these standards at these banks. You need to create two pins in the designs and configure the pins with single-ended SSTL-18 standards. However, this is limited only to pins that support the differential pin-pair I/O function and is dependent on the single-ended SSTL-18 standards support at these banks.

Figure 4–12. Differential SSTL-18 Class I Termination

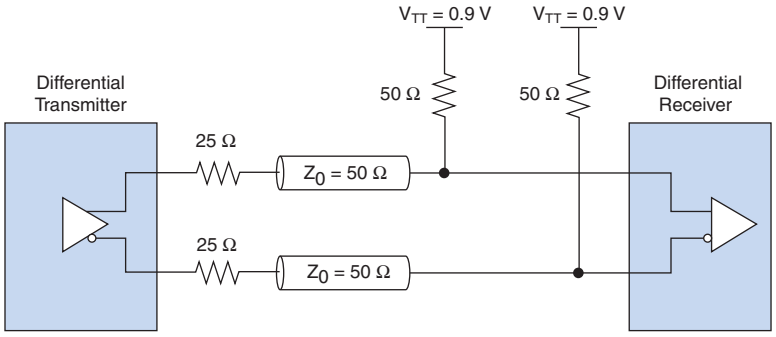

Figure 4–13. Differential SSTL-18 Class II Termination

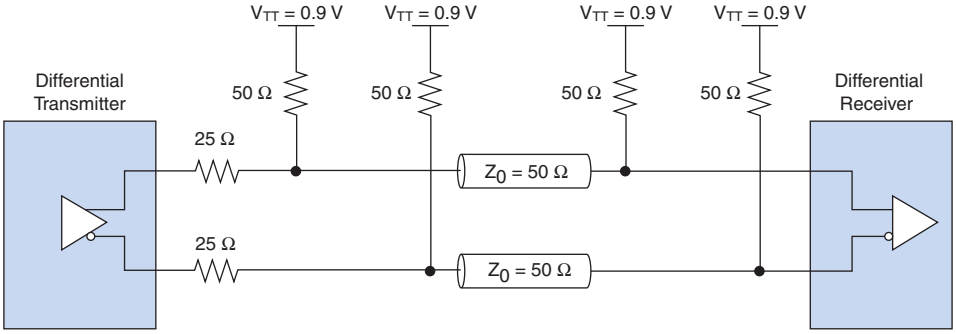

1.8-V Differential HSTL Class I and 1.8-V Differential HSTL Class II

The 1.8-V differential HSTL specification is the same as the 1.8-V single-ended HSTL specification. It is used for applications designed to operate in the 0.0- to 1.8-V HSTL logic switching range such as QDR memory clock interfaces. Stratix II and Stratix II GX devices support both input and output levels operation. Figures 4–14 and 4–15 show details on 1.8-V differential HSTL termination.

Stratix II and Stratix II GX devices support 1.8-V differential HSTL I/O standards in pseudo-differential mode, which is implemented by using two 1.8-V HSTL single-ended buffers.

The Quartus II software only supports pseudo-differential standards on the `INCLK`, `FBIN` and `EXTCLK` ports of enhanced PLL, as well as on DQS pins when DQS megafunction (ALTDQS, Bidirectional Data Strobe) is used. Two single-ended output buffers are automatically programmed to have opposite polarity so as to implement a pseudo-differential output. A proper V_{REF} voltage is required for the two single-ended input buffers to implement a pseudo-differential input. In this case, only the positive polarity input is used in the speed path while the negative input is not connected internally. In other words, only the non-inverted pin is required to be specified in your design, while the Quartus II software automatically generates the inverted pin for you.

Although the Quartus II software does not support 1.8-V pseudo-differential HSTL I/O standards on left/right I/O banks, you can implement these standards at these banks. You need to create two pins in the designs and configure the pins with single-ended 1.8-V HSTL standards. However, this is limited only to pins that support the differential pin-pair I/O function and is dependent on the single-ended 1.8-V HSTL standards support at these banks.

Figure 4–14. 1.8-V Differential HSTL Class I Termination

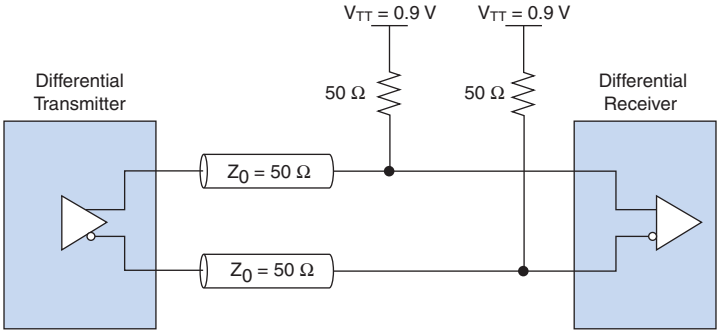

Figure 4–15. 1.8-V Differential HSTL Class II Termination

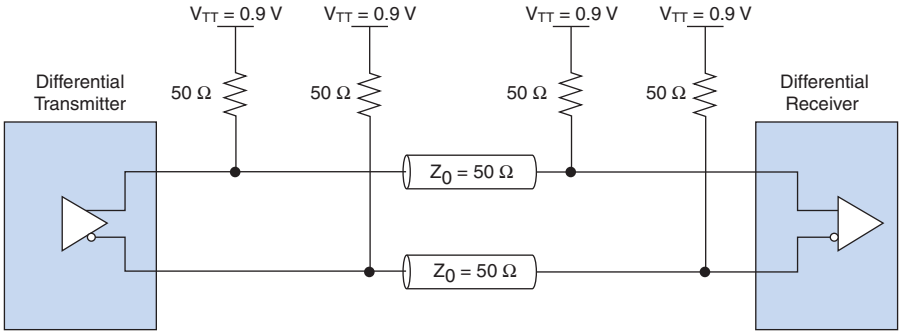

1.5-V Differential HSTL Class I and 1.5-V Differential HSTL Class II

The 1.5-V differential HSTL standard is formulated under EIA/JEDEC Standard, EIA/JESD8-6: A 1.5-V Output Buffer Supply Voltage Based Interface Standard for Digital Integrated Circuits.

The 1.5-V differential HSTL specification is the same as the 1.5-V single-ended HSTL specification. It is used for applications designed to operate in the 0.0- to 1.5-V HSTL logic switching range, such as QDR memory clock interfaces. Stratix II and Stratix II GX devices support both input and output levels operation. Figures 4–16 and 4–17 show details on the 1.5-V differential HSTL termination.

Stratix II and Stratix II GX devices support 1.5-V differential HSTL I/O standards in pseudo-differential mode, which is implemented by using two 1.5-V HSTL single-ended buffers.

The Quartus II software only supports pseudo-differential standards on the INCLK, FBIN and EXTCLK ports of enhanced PLL, as well as on DQS pins when DQS megafunction (ALTDQS, Bidirectional Data Strobe) is used. Two single-ended output buffers are automatically programmed to have opposite polarity so as to implement a pseudo-differential output. A proper V_{REF} voltage is required for the two single-ended input buffers to implement a pseudo-differential input. In this case, only the positive polarity input is used in the speed path while the negative input is not connected internally. In other words, only the non-inverted pin is required to be specified in your design, while the Quartus II software automatically generates the inverted pin for you.

Although the Quartus II software does not support 1.5-V pseudo-differential HSTL I/O standards on left/right I/O banks, you can implement these standards at these banks. You need to create two pins in the designs and configure the pins with single-ended 1.5-V HSTL standards. However, this is limited only to pins that support the differential pin-pair I/O function and is dependent on the single-ended 1.8-V HSTL standards support at these banks.

Figure 4–16. 1.5-V Differential HSTL Class I Termination

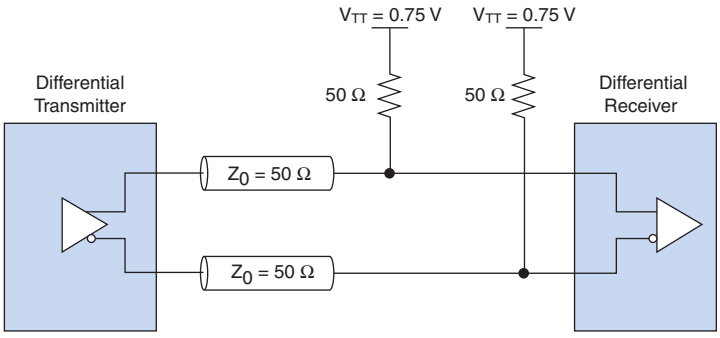

Figure 4–17. 1.5-V Differential HSTL Class II Termination

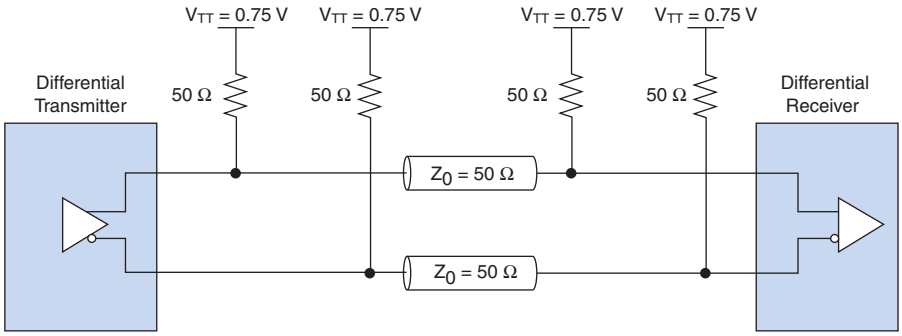

LVDS

The LVDS standard is formulated under ANSI/TIA/EIA Standard, ANSI/TIA/EIA-644: Electrical Characteristics of Low Voltage Differential Signaling Interface Circuits.

The LVDS I/O standard is a differential high-speed, low-voltage swing, low-power, general-purpose I/O interface standard. In Stratix II devices, the LVDS I/O standard requires a 2.5-V V_{CCIO} level for the side I/O pins in banks 1, 2, 5, and 6. The top and bottom banks have different V_{CCIO} requirements for the LVDS I/O standard. The LVDS clock I/O pins in banks 9 through 12 require a 3.3-V V_{CCIO} level. Within these banks, the `PLL[5,6,11,12]_OUT[1,2]` pins support output only LVDS operations. The `PLL[5,6,11,12]_FB/OUT2` pins support LVDS input or output operations but cannot be configured for bidirectional LVDS operations. The LVDS clock input pins in banks 4, 5, 7, and 8 use V_{CCINT} and have no dependency on the V_{CCIO} voltage level. This standard is used in applications requiring high-bandwidth data transfer, backplane drivers, and clock distribution. The ANSI/TIA/EIA-644 standard specifies LVDS transmitters and receivers capable of operating at recommended maximum data signaling rates of 655 megabit per second (Mbps). However, devices can operate at slower speeds if needed, and there is a theoretical maximum of 1.923 Gbps. Stratix II and Stratix II GX devices are capable of running at a maximum data rate of 1 Gbps and still meet the ANSI/TIA/EIA-644 standard.

Because of the low-voltage swing of the LVDS I/O standard, the electromagnetic interference (EMI) effects are much smaller than complementary metal-oxide semiconductor (CMOS), transistor-to-transistor logic (TTL), and positive (or psuedo) emitter coupled logic (PECL). This low EMI makes LVDS ideal for applications

with low EMI requirements or noise immunity requirements. The LVDS standard does not require an input reference voltage. However, it does require a 100-Ω termination resistor between the two signals at the input buffer. Stratix II and Stratix II GX devices provide an optional 100-Ω differential LVDS termination resistor in the device using on-chip differential termination. Stratix II and Stratix II GX devices support both input and output levels operation.

Differential LVPECL

The low-voltage positive (or pseudo) emitter coupled logic (LVPECL) standard is a differential interface standard requiring a 3.3-V V_{CCIO}. The standard is used in applications involving video graphics, telecommunications, data communications, and clock distribution. The high-speed, low-voltage swing LVPECL I/O standard uses a positive power supply and is similar to LVDS. However, LVPECL has a larger differential output voltage swing than LVDS. The LVPECL standard does not require an input reference voltage, but it does require a 100-Ω termination resistor between the two signals at the input buffer. Figures 4–18 and 4–19 show two alternate termination schemes for LVPECL.

Stratix II and Stratix II GX devices support both input and output levels operation.

Figure 4–18. LVPECL DC Coupled Termination

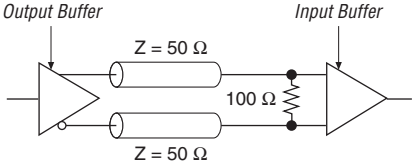

Figure 4–19. LVPECL AC Coupled Termination

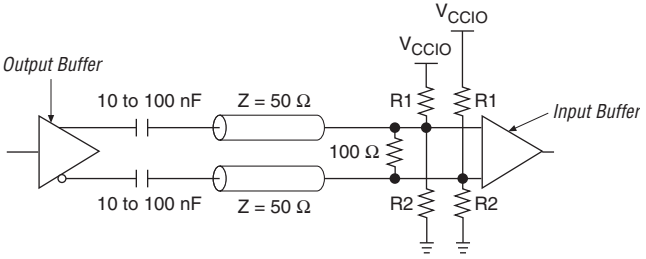

HyperTransport Technology

The HyperTransport standard is formulated by the HyperTransport Consortium.

The HyperTransport I/O standard is a differential high-speed, high-performance I/O interface standard requiring a 2.5- or 3.3-V V_{CCIO}. This standard is used in applications such as high-performance networking, telecommunications, embedded systems, consumer electronics, and Internet connectivity devices. The HyperTransport I/O standard is a point-to-point standard in which each HyperTransport bus consists of two point-to-point unidirectional links. Each link is 2 to 32 bits.

The HyperTransport standard does not require an input reference voltage. However, it does require a 100-Ω termination resistor between the two signals at the input buffer. Figure 4–20 shows HyperTransport termination. Stratix II and Stratix II GX devices include an optional 100-Ω differential HyperTransport termination resistor in the device using on-chip differential termination.

Stratix II and Stratix II GX devices support both input and output levels operation.

Figure 4–20. HyperTransport Termination

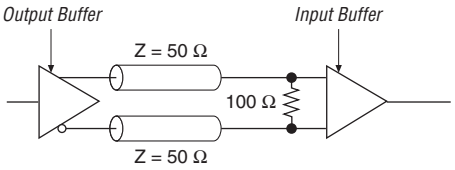

Stratix II and Stratix II GX External Memory Interface

The increasing demand for higher-performance data processing systems often requires memory-intensive applications. Stratix II and Stratix II GX devices can interface with many types of external memory.

Refer to the *External Memory Interfaces in Stratix II & Stratix II GX Devices* chapter in volume 2 of the *Stratix II Device Handbook* or the *External Memory Interfaces in Stratix II & Stratix II GX Devices* chapter in volume 2 of the *Stratix II GX Device Handbook* for more information on the external memory interface support in Stratix II or Stratix II GX devices.

Stratix II and Stratix II GX I/O Banks

Stratix II devices have eight general I/O banks and four enhanced phase-locked loop (PLL) external clock output banks (Figure 4–21). I/O banks 1, 2, 5, and 6 are on the left or right sides of the device and I/O banks 3, 4, and 7 through 12 are at the top or bottom of the device.

Figure 4–21. Stratix II I/O Banks *Notes (1), (2), (3), (4), (5), (6), (7)*

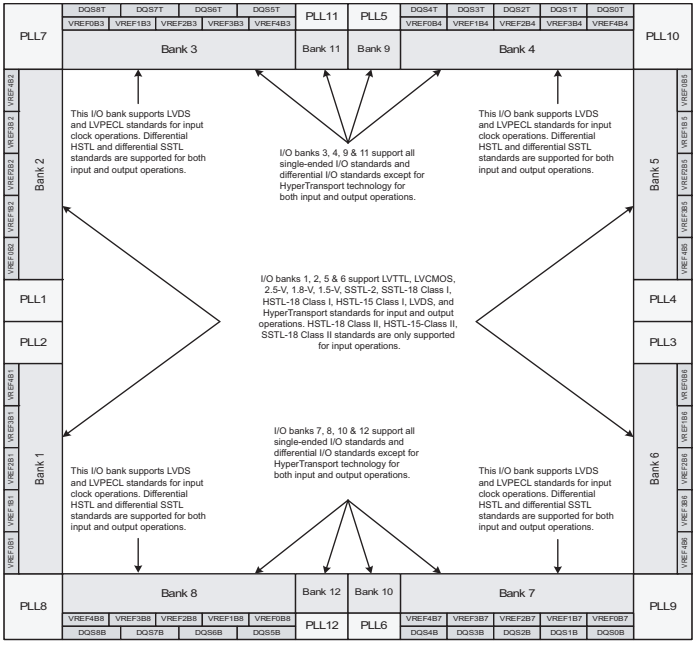

Notes to Figure 4–21:

(1) Figure 4–21 is a top view of the silicon die that corresponds to a reverse view for flip-chip packages. It is a graphical representation only. Refer to the pin list and Quartus II software for exact locations.

(2) Depending on the size of the device, different device members have different numbers of V_{REF} groups.

(3) Banks 9 through 12 are enhanced PLL external clock output banks. These PLL banks utilize the adjacent V_{REF} group when voltage-referenced standards are implemented. For example, if an SSTL input is implemented in PLL bank 10, the voltage level at VREFB7 is the reference voltage level for the SSTL input.

(4) Differential HSTL and differential SSTL standards are available for bidirectional operations on DQS pin and input-only operations on PLL clock input pins; LVDS, LVPECL, and HyperTransport standards are available for input-only operations on PLL clock input pins. Refer to the "Differential I/O Standards" on page 4–10 for more details.

(5) Quartus II software does not support differential SSTL and differential HSTL standards at left/right I/O banks. Refer to the "Differential I/O Standards" on page 4–10 if you need to implement these standards at these I/O banks.

(6) Banks 11 and 12 are available only in EP2S60, EP2S90, EP2S130, and EP2S180 devices.

(7) PLLs 7, 8, 9 10, 11, and 12 are available only in EP2S60, EP2S90, EP2S130, and EP2S180 devices.

Stratix II GX devices have 6 general I/O banks and 4 enhanced phase-locked loop (PLL) external clock output banks (Figure 4–22). I/O banks 9 through 12 are enhanced PLL external clock output banks located on the top and bottom of the device.

Figure 4–22. Stratix II GX I/O Banks *Notes (1), (2), (3), (4)*

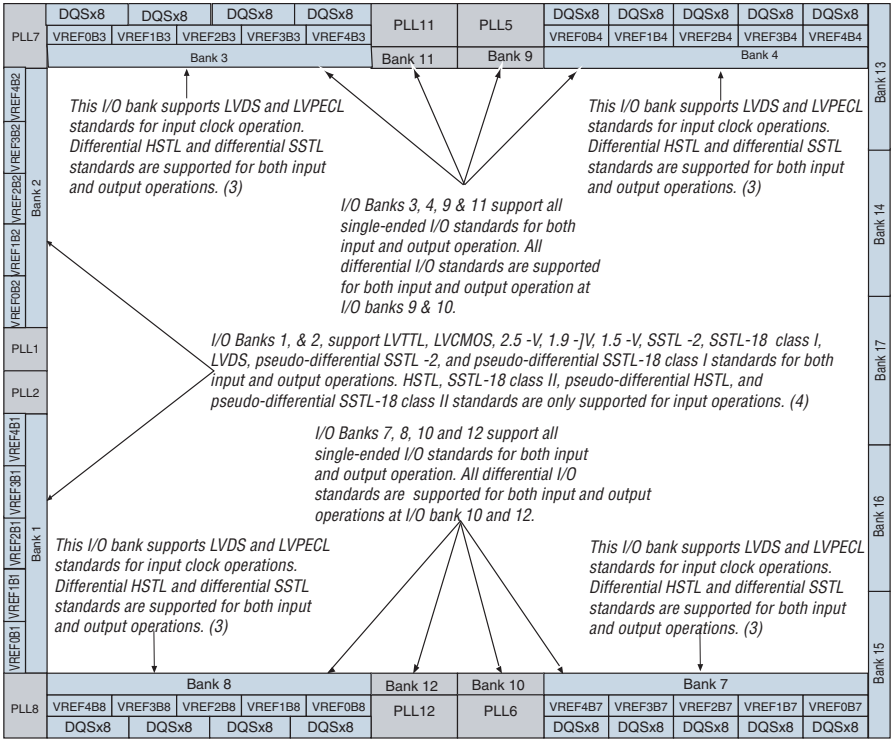

Notes to Figure 4–22:

(1) Figure 4–22 is a top view of the silicon die which corresponds to a reverse view for flip-chip packages. It is a graphical representation only.

(2) Depending on size of the device, different device members have different number of V_{REF} groups. Refer to the pin list and the Quartus II software for exact locations.

(3) Banks 9 through 12 are enhanced PLL external clock output banks.

(4) Horizontal I/O banks feature transceiver and DPA circuitry for high speed differential I/O standards. Refer to the *High-Speed Differential I/O Interfaces with DPA in Stratix II & Stratix II GX Devices* chapter in volume 2 of the *Stratix II GX Device Handbook*, or the *Stratix II GX Transceiver User Guide* (volume 1) of the *Stratix II GX Device Handbook* for more information on differential I/O standards.

(5) Quartus II software does not support differential SSTL and differential HSTL standards at left/right I/O banks. Refer to the "Differential I/O Standards" on page 4–10 if you need to implement these standards at these I/O banks.

(6) Banks 11 and 12 are available only in EP2SGX60C/D/E, EP2SGX90E/F, and EP2SGX130G.

(7) PLLs 7,8,11, and 12 are available only in EP2SGX60C/D/E, EP2SGXE/F, and EP2SGX130G.

Programmable I/O Standards

Stratix II and Stratix II GX device programmable I/O standards deliver high-speed and high-performance solutions in many complex design systems. This section discusses the I/O standard support in the I/O banks of Stratix II and Stratix II GX devices.

Regular I/O Pins

Most Stratix II and Stratix II GX device pins are multi-function pins. These pins support regular inputs and outputs as their primary function, and offer an optional function such as DQS, differential pin-pair, or PLL external clock outputs. For example, you can configure a multi-function pin in the enhanced PLL external clock output bank as a PLL external clock output when it is not used as a regular I/O pin.



I/O pins that reside in PLL banks 9 through 12 are powered by the VCC_PLL<*5, 6, 11, or 12*>_OUT pins, respectively. The EP2S60F484, EP2S60F780, EP2S90H484, EP2S90F780, and EP2S130F780 devices do not support PLLs 11 and 12. Therefore, any I/O pins that reside in bank 11 are powered by the VCCIO3 pin, and any I/O pins that reside in bank 12 are powered by the VCCIO8 pin.

Table 4–2 shows the I/O standards supported when a pin is used as a regular I/O pin in the I/O banks of Stratix II and Stratix II GX devices.

Table 4–2. Stratix II and Stratix II GX Regular I/O Standards Support (Part 1 of 2)

I/O Standard	General I/O Bank								Enhanced PLL External Clock Output Bank *(2)*			
	1	2	3	4	5*(1)*	6*(1)*	7	8	9	10	11	12
LVTTL	✓	✓	✓	✓	✓	✓	✓	✓	✓	✓	✓	✓
LVCMOS	✓	✓	✓	✓	✓	✓	✓	✓	✓	✓	✓	✓
2.5 V	✓	✓	✓	✓	✓	✓	✓	✓	✓	✓	✓	✓
1.8 V	✓	✓	✓	✓	✓	✓	✓	✓	✓	✓	✓	✓
1.5 V	✓	✓	✓	✓	✓	✓	✓	✓	✓	✓	✓	✓
3.3-V PCI			✓	✓			✓	✓	✓	✓	✓	✓
3.3-V PCI-X			✓	✓			✓	✓	✓	✓	✓	✓
SSTL-2 Class I	✓	✓	✓	✓	✓	✓	✓	✓	✓	✓	✓	✓
SSTL-2 Class II	✓	✓	✓	✓	✓	✓	✓	✓	✓	✓	✓	✓

Table 4–2. Stratix II and Stratix II GX Regular I/O Standards Support (Part 2 of 2)

I/O Standard	General I/O Bank								Enhanced PLL External Clock Output Bank *(2)*			
	1	2	3	4	5*(1)*	6*(1)*	7	8	9	10	11	12
SSTL-18 Class I	✓	✓	✓	✓	✓	✓	✓	✓	✓	✓	✓	✓
SSTL-18 Class II	*(3)*	*(3)*	✓	✓	*(3)*	*(3)*	✓	✓	✓	✓	✓	✓
1.8-V HSTL Class I	✓	✓	✓	✓	✓	✓	✓	✓	✓	✓	✓	✓
1.8-V HSTL Class II	*(3)*	*(3)*	✓	✓	*(3)*	*(3)*	✓	✓	✓	✓	✓	✓
1.5-V HSTL Class I	✓	✓	✓	✓	✓	✓	✓	✓	✓	✓	✓	✓
1.5-V HSTL Class II	*(3)*	*(3)*	✓	✓	*(3)*	*(3)*	✓	✓	✓	✓	✓	✓
1.2-V HSTL				✓			✓	✓				
Differential SSTL-2 Class I	*(4)*	*(4)*	*(5)*	*(5)*	*(4)*	*(4)*	*(5)*	*(5)*				
Differential SSTL-2 Class II	*(4)*	*(4)*	*(5)*	*(5)*	*(4)*	*(4)*	*(5)*	*(5)*				
Differential SSTL-18 Class I	*(4)*	*(4)*	*(5)*	*(5)*	*(4)*	*(4)*	*(5)*	*(5)*				
Differential SSTL-18 Class II	*(4)*	*(4)*	*(5)*	*(5)*	*(4)*	*(4)*	*(5)*	*(5)*				
1.8-V differential HSTL Class I	*(4)*	*(4)*	*(5)*	*(5)*	*(4)*	*(4)*	*(5)*	*(5)*				
1.8-V differential HSTL Class II	*(4)*	*(4)*	*(5)*	*(5)*	*(4)*	*(4)*	*(5)*	*(5)*				
1.5-V differential HSTL Class I	*(4)*	*(4)*	*(5)*	*(5)*	*(4)*	*(4)*	*(5)*	*(5)*				
1.5-V differential HSTL Class II	*(4)*	*(4)*	*(5)*	*(5)*	*(4)*	*(4)*	*(5)*	*(5)*				
LVDS	✓	✓	*(6)*	*(6)*	✓	✓	*(6)*	*(6)*	✓	✓	✓	✓
HyperTransport technology	✓	✓			✓	✓						
Differential LVPECL			*(6)*	*(6)*			*(6)*	*(6)*	✓	✓	✓	✓

Notes to Table 4–2:

(1) This bank is not available in Stratix II GX Devices.

(2) A mixture of single-ended and differential I/O standards is not allowed in enhanced PLL external clock output bank.

(3) This I/O standard is only supported for the input operation in this I/O bank.

(4) Although the Quartus II software does not support pseudo-differential SSTL/HSTL I/O standards on the left and right I/O banks, you can implement these standards at these banks. Refer to the "Differential I/O Standards" on page 4–10 for details.

(5) This I/O standard is supported for both input and output operations for pins that support the DQS function. Refer to the "Differential I/O Standards" on page 4–10 for details.

(6) This I/O standard is only supported for the input operation for pins that support PLL `INCLK` function in this I/O bank.

Clock I/O Pins

The PLL clock I/O pins consist of clock inputs (INCLK), external feedback inputs (FBIN), and external clock outputs (EXTCLK). Clock inputs are located at the left and right I/O banks (banks 1, 2, 5, and 6) to support fast PLLs, and at the top and bottom I/O banks (banks 3, 4, 7, and 8) to support enhanced PLLs. Both external clock outputs and external feedback inputs are located at enhanced PLL external clock output banks (banks 9, 10, 11, and 12) to support enhanced PLLs. Table 4–3 shows the PLL clock I/O support in the I/O banks of Stratix II and Stratix II GX devices.

Table 4–3. I/O Standards Supported for Stratix II and Stratix II GX PLL Pins (Part 1 of 2)

I/O Standard (2)	Enhanced PLL (1)			Fast PLL
	Input		Output	Input
	INCLK	FBIN	EXTCLK	INCLK
LVTTL	✓	✓	✓	✓
LVCMOS	✓	✓	✓	✓
2.5 V	✓	✓	✓	✓
1.8 V	✓	✓	✓	✓
1.5 V	✓	✓	✓	✓
3.3-V PCI	✓	✓	✓	
3.3-V PCI-X	✓	✓	✓	
SSTL-2 Class I	✓	✓	✓	✓
SSTL-2 Class II	✓	✓	✓	✓
SSTL-18 Class I	✓	✓	✓	✓
SSTL-18 Class II	✓	✓	✓	✓
1.8-V HSTL Class I	✓	✓	✓	✓
1.8-V HSTL Class II	✓	✓	✓	✓
1.5-V HSTL Class I	✓	✓	✓	✓
1.5-V HSTL Class II	✓	✓	✓	✓
Differential SSTL-2 Class I	✓	✓	✓	
Differential SSTL-2 Class II	✓	✓	✓	
Differential SSTL-18 Class I	✓	✓	✓	
Differential SSTL-18 Class II	✓	✓	✓	

Table 4–3. I/O Standards Supported for Stratix II and Stratix II GX PLL Pins (Part 2 of 2)

I/O Standard (2)	Enhanced PLL (1)			Fast PLL
	Input		Output	Input
	INCLK	FBIN	EXTCLK	INCLK
1.8-V differential HSTL Class I	✓	✓	✓	
1.8-V differential HSTL Class II	✓	✓	✓	
1.5-V differential HSTL Class I	✓	✓	✓	
1.5-V differential HSTL Class II	✓	✓	✓	
LVDS	✓	✓	✓	✓
HyperTransport technology				✓
Differential LVPECL	✓	✓	✓	

Note to Table 4–3:
(1) The enhanced PLL external clock output bank does not allow a mixture of both single-ended and differential I/O standards.
(2) Altera does not support 1.2-V HSTL for PLL input pins on column I/O pins.



For more information, refer to the *PLLs in Stratix II & Stratix II GX Devices* chapter in volume 2 of the *Stratix II Device Handbook* or the *PLLs in Stratix II & Straix II GX Devices* chapter in volume 2 of the *Stratix II GX Device Handbook.*

Voltage Levels

Stratix II device specify a range of allowed voltage levels for supported I/O standards. Table 4–4 shows only typical values for input and output V_{CCIO}, V_{REF}, as well as the board V_{TT}.

Table 4–4. Stratix II and Stratix II GX I/O Standards and Voltage Levels (Part 1 of 3) Note (1)

I/O Standard	Stratix II and Stratix II GX					
	V_{CCIO} (V)				V_{REF} (V)	V_{TT} (V)
	Input Operation		Output Operation		Input	Termination
	Top and Bottom I/O Banks	Left and Right I/O Banks (3)	Top and Bottom I/O Banks	Left and Right I/O Banks (3)		
LVTTL	3.3/2.5	3.3/2.5	3.3	3.3	NA	NA
LVCMOS	3.3/2.5	3.3/2.5	3.3	3.3	NA	NA

Table 4–4. Stratix II and Stratix II GX I/O Standards and Voltage Levels (Part 2 of 3) *Note (1)*

I/O Standard	Stratix II and Stratix II GX					
	V_{CCIO} (V)				V_{REF} (V)	V_{TT} (V)
	Input Operation		Output Operation		Input	Termination
	Top and Bottom I/O Banks	Left and Right I/O Banks *(3)*	Top and Bottom I/O Banks	Left and Right I/O Banks *(3)*		
2.5 V	3.3/2.5	3.3/2.5	2.5	2.5	NA	NA
1.8 V	1.8/1.5	1.8/1.5	1.8	1.8	NA	NA
1.5 V	1.8/1.5	1.8/1.5	1.5	1.5	NA	NA
3.3-V PCI	3.3	NA	3.3	NA	NA	NA
3.3-V PCI-X	3.3	NA	3.3	NA	NA	NA
SSTL-2 Class I	2.5	2.5	2.5	2.5	1.25	1.25
SSTL-2 Class II	2.5	2.5	2.5	2.5	1.25	1.25
SSTL-18 Class I	1.8	1.8	1.8	1.8	0.90	0.90
SSTL-18 Class II	1.8	1.8	1.8	NA	0.90	0.90
1.8-V HSTL Class I	1.8	1.8	1.8	1.8	0.90	0.90
1.8-V HSTL Class II	1.8	1.8	1.8	NA	0.90	0.90
1.5-V HSTL Class I	1.5	1.5	1.5	1.5	0.75	0.75
1.5-V HSTL Class II	1.5	1.5	1.5	NA	0.75	0.75
1.2-V HSTL *(4)*	1.2	NA	1.2	NA	0.6	NA
Differential SSTL-2 Class I	2.5	2.5	2.5	2.5	1.25	1.25
Differential SSTL-2 Class II	2.5	2.5	2.5	2.5	1.25	1.25
Differential SSTL-18 Class I	1.8	1.8	1.8	1.8	0.90	0.90
Differential SSTL-18 Class II	1.8	1.8	1.8	NA	0.90	0.90
1.8-V differential HSTL Class I	1.8	1.8	1.8	NA	0.90	0.90
1.8-V differential HSTL Class II	1.8	1.8	1.8	NA	0.90	0.90
1.5-V differential HSTL Class I	1.5	1.5	1.5	NA	0.75	0.75
1.5-V differential HSTL Class II	1.5	1.5	1.5	NA	0.75	0.75
LVDS *(2)*	3.3/2.5/1.8/1.5	2.5	3.3	2.5	NA	NA

Table 4–4. Stratix II and Stratix II GX I/O Standards and Voltage Levels (Part 3 of 3) *Note (1)*

I/O Standard	Stratix II and Stratix II GX					
	V_{CCIO} (V)				V_{REF} (V)	V_{TT} (V)
	Input Operation		Output Operation		Input	Termination
	Top and Bottom I/O Banks	Left and Right I/O Banks *(3)*	Top and Bottom I/O Banks	Left and Right I/O Banks *(3)*		
HyperTransport technology	NA	2.5	NA	2.5	NA	NA
Differential LVPECL *(2)*	3.3/2.5/1.8/1.5	NA	3.3	NA	NA	NA

Notes to Table 4–4:

(1) Any input pins with PCI-clamping diode will clamp the V_{CCIO} to 3.3 V.

(2) LVDS and LVPECL output operation in the top and bottom banks is only supported in PLL banks 9-12. The V_{CCIO} level for differential output operation in the PLL banks is 3.3 V. The V_{CCIO} level for output operation in the left and right I/O banks is 2.5 V.

(3) The right I/O bank does not apply to the Stratix II GX. The right I/O Bank on Stratix II GX devices consists of transceivers.

(4) 1.2-V HSTL is only supported in I/O banks 4,7, and 8.

Refer to the *DC & Switching Characteristics* chapter in volume 1 of the *Stratix II Device Handbook* or the *DC & Switching Characteristics* chapter in volume 1 of the *Stratix II GX Device Handbook* for detailed electrical characteristics of each I/O standard.

On-Chip Termination

Stratix II and Stratix II GX devices feature on-chip termination to provide I/O impedance matching and termination capabilities. Apart from maintaining signal integrity, this feature also minimizes the need for external resistor networks, thereby saving board space and reducing costs.

Stratix II and Stratix II GX devices support on-chip series (R_S) and parallel (R_T) termination for single-ended I/O standards and on-chip differential termination (R_D) for differential I/O standards. This section discusses the on-chip series termination support.

For more information on differential on-chip termination, Refer to the *High-Speed Differential I/O Interfaces with DPA in Stratix II & Stratix II GX Devices* chapter in volume 2 of the *Stratix II Device Handbook* or the *High-Speed Differential I/O Interfaces with DPA in Stratix II & Stratix II GX Devices* chapter in volume 2 of the *Stratix II GX Device Handbook.*

The Stratix II and Stratix II GX devices supports I/O driver on-chip series (R_S) and parallel (R_T) termination through drive strength control for single-ended I/Os. There are three ways to implement the R_S and (R_T) in Stratix II and Stratix II GX devices:

- R_S without calibration for both row I/Os and column I/Os
- R_S with calibration only for column I/Os
- R_T with calibration only for column I/Os

On-Chip Series Termination without Calibration

Stratix II and Stratix II GX devices support driver impedance matching to provide the I/O driver with controlled output impedance that closely matches the impedance of the transmission line. As a result, reflections can be significantly reduced. Stratix II and Stratix II GX devices support on-chip series termination for single-ended I/O standards (see Figure 4–23). The R_S shown in Figure 4–23 is the intrinsic impedance of transistors. The typical R_S values are 25Ω and 50Ω. Once matching impedance is selected, current drive strength is no longer selectable.



On-chip series termination without calibration is supported on output pins or on the output function of bidirectional pins.

Figure 4–23. Stratix II and Stratix II GX On-Chip Series Termination without Calibration

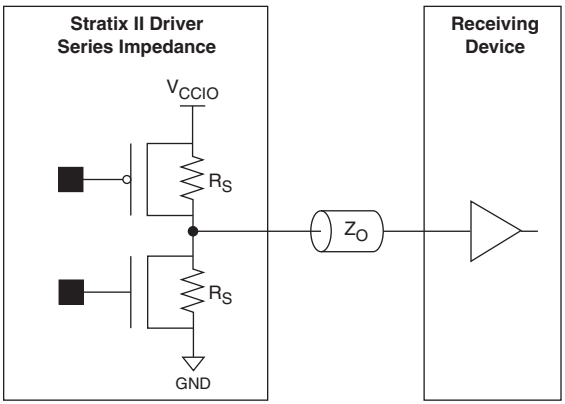

Table 4–5 shows the list of output standards that support on-chip series termination without calibration.

Table 4–5. Selectable I/O Drivers with On-Chip Series Termination without Calibration

I/O Standard	On-chip Series Termination Setting		
	Row I/O	Column I/O	Unit
3.3-V LVTTL	50	50	Ω
	25	25	Ω
3.3-V LVCMOS	50	50	Ω
	25	25	Ω
2.5-V LVTTL	50	50	Ω
	25	25	Ω
2.5-V LVCMOS	50	50	Ω
	25	25	Ω
1.8-V LVTTL	50	50	Ω
		25	Ω
1.8-V LVCMOS	50	50	Ω
		25	Ω
1.5-V LVTTL	50	50	Ω
1.5-V LVCMOS	50	50	Ω
SSTL-2 Class I	50	50	Ω
SSTL-2 Class II	25	25	Ω
SSTL-18 Class I	50	50	Ω
SSTL-18 Class II		25	Ω
1.8-V HSTL Class I	50	50	Ω
1.8-V HSTL Class II		25	Ω
1.5-V HSTL Class I	50	50	Ω
1.2-V HSTL *(1)*		50	Ω

Note to Table 4–5:
(1) 1.2-V HSTL is only supported in I/O banks 4,7, and 8.

To use on-chip termination for the SSTL Class I standard, users should select the 50-Ω on-chip series termination setting for replacing the external 25-Ω R_S (to match the 50-Ω transmission line). For the SSTL Class II standard, users should select the 25-Ω on-chip series termination setting (to match the 50-Ω transmission line and the near end 50-Ω pull-up to V_{TT}).

For more information on tolerance specifications for on-chip termination without calibration, refer to the *DC & Switching Characteristics* chapter in volume 1 of the *Stratix II Device Handbook* or the *DC & Switching Characteristics* chapter in volume 1 of the *Stratix II GX Device Handbook*.

On-Chip Series Termination with Calibration

Stratix II and Stratix II GX devices support on-chip series termination with calibration in column I/Os in top and bottom banks. Every column I/O buffer consists of a group of transistors in parallel. Each transistor can be individually enabled or disabled. The on-chip series termination calibration circuit compares the total impedance of the transistor group to the external 25-Ω or 50-Ω resistors connected to the RUP and RDN pins, and dynamically enables or disables the transistors until they match (as shown in Figure 4–24). The R_S shown in Figure 4–24 is the intrinsic impedance of transistors. Calibration happens at the end of device configuration. Once the calibration circuit finds the correct impedance, it powers down and stops changing the characteristics of the drivers.

On-chip series termination with calibration is supported on output pins or on the output function of bidirectional pins.

Figure 4–24. Stratix II and Stratix II GX On-Chip Series Termination with Calibration

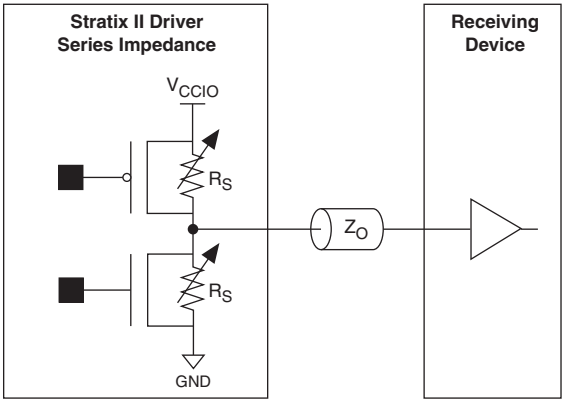

Table 4–6 shows the list of output standards that support on-chip series termination with calibration.

Table 4–6. Selectable I/O Drivers with On-Chip Series Termination with Calibration

I/O Standard	On-Chip Series Termination Setting (Column I/O)	Unit
3.3-V LVTTL	50	Ω
	25	Ω
3.3-V LVCMOS	50	Ω
	25	Ω
2.5-V LVTTL	50	Ω
	25	Ω
2.5-V LVCMOS	50	Ω
	25	Ω
1.8-V LVTTL	50	Ω
	25	Ω
1.8-V LVCMOS	50	Ω
	25	Ω
1.5 LVTTL	50	Ω
1.5 LVCMOS	50	Ω
SSTL-2 Class I	50	Ω
SSTL-2 Class II	25	Ω
SSTL-18 Class I	50	Ω
SSTL-18 Class II	25	Ω
1.8-V HSTL Class I	50	Ω
1.8-V HSTL Class II	25	Ω
1.5-V HSTL Class I	50	Ω
1.2-V HSTL *(1)*	50	Ω

Note to Table 4–6:
(1) 1.2-V HSTL is only supported in I/O banks 4,7, and 8.

On-Chip Parallel Termination with Calibration

Stratix II and Stratix II GX devices support on-chip parallel termination with calibration in column I/Os in top and bottom banks. Every column I/O buffer consists of a group of transistors in parallel. Each transistor can be individually enabled or disabled. The on-chip parallel termination calibration circuit compares the total impedance of the transistor group to

the external 50-Ω resistors connected to the RUP and RDN pins and dynamically enables or disables the transistors until they match. Calibration happens at the end of the device configuration. Once the calibration circuit finds the correct impedance, it powers down and stops changing the characteristics of the drivers.

Table 4–7. Selectable I/O Drivers with On-Chip Parallel Termination with Calibration

I/O Standard	On-Chip Parallel Termination Setting (Column I/O)	Unit
SSTL-2 Class I	50	Ω
SSTL-2 Class II	50	Ω
SSTL-18 Class I	50	Ω
SSTL-18 Class II	50	Ω
1.8-V HSTL Class I	50	Ω
1.8-V HSTL Class II	50	Ω
1.5-V HSTL Class I	50	Ω
1.5-V HSTL Class II	50	Ω
1.2-V HSTL *(1)*	50	Ω

Note to Table 4–7:
(1) 1.2-V HSTL is only supported in I/O banks 4,7, and 8.

There are two separate sets of calibration circuits in the Stratix II and Stratix II GX devices:

- One calibration circuit for top banks 3 and 4
- One calibration circuit for bottom banks 7 and 8

Calibration circuits rely on the external pull-up reference resistor (R_{UP}) and pull-down reference resistor (R_{DN}) to achieve accurate on-chip series and parallel termination. There is one pair of RUP and RDN pins in bank 4 for the calibration circuit for top I/O banks 3 and 4. Similarly, there is one pair of RUP and RDN pins in bank 7 for the calibration circuit for bottom I/O banks 7 and 8. Two banks share the same calibration circuitry, so they must have the same V_{CCIO} voltage if both banks enable on-chip series or parallel termination with calibration. If banks 3 and 4 have different V_{CCIO} voltages, only bank 4 can enable on-chip series or parallel termination with calibration because the RUP and RDN pins are located in bank 4. Bank 3 still can use on-chip series termination, but without calibration. The same rule applies to banks 7 and 8.



On-chip parallel termination with calibration is only supported for input pins. Pins configured as bidirectional do not support on-chip parallel termination.

The RUP and RDN pins are dual-purpose I/Os, which means they can be used as regular I/Os if the calibration circuit is not used. When used for calibration, the RUP pin is connected to V_{CCIO} through an external 25-Ω or 50-Ω resistor for an on-chip series termination value of 25 Ω or 50 Ω, respectively. The RDN pin is connected to GND through an external 25-Ω or 50-Ω resistor for an on-chip series termination value of 25 Ω or 50 Ω, respectively. For on-chip parallel termination, the RUP pin is connected to V_{CCIO} through an external 50-Ω resistor, and RDN is connected to GND through an external 50-Ω resistor.



For more information on tolerance specifications for on-chip termination with calibration, refer to the *DC & Switching Characteristics* chapter in volume 1 of the *Stratix II Device Handbook* or the *DC & Switching Characteristics* chapter in volume 1 of the *Stratix II GX Device Handbook*.

Design Considerations

While Stratix II and Stratix II GX devices feature various I/O capabilities for high-performance and high-speed system designs, there are several other considerations that require attention to ensure the success of those designs.

I/O Termination

I/O termination requirements for single-ended and differential I/O standards are discussed in this section.

Single-Ended I/O Standards

Although single-ended, non-voltage-referenced I/O standards do not require termination, impedance matching is necessary to reduce reflections and improve signal integrity.

Voltage-referenced I/O standards require both an input reference voltage, V_{REF}, and a termination voltage, V_{TT}. The reference voltage of the receiving device tracks the termination voltage of the transmitting device. Each voltage-referenced I/O standard requires a unique termination setup. For example, a proper resistive signal termination scheme is critical in SSTL standards to produce a reliable DDR memory system with superior noise margin.

Stratix II and Stratix II GX on-chip series and parallel termination provides the convenience of no external components. External pull-up resistors can be used to terminate the voltage-referenced I/O standards such as SSTL-2 and HSTL.



Refer to the "Stratix II and Stratix II GX I/O Standards Support" on page 4–2 for more information on the termination scheme of various single-ended I/O standards.

Differential I/O Standards

Differential I/O standards typically require a termination resistor between the two signals at the receiver. The termination resistor must match the differential load impedance of the bus. Stratix II and Stratix II GX devices provide an optional differential on-chip resistor when using LVDS and HyperTransport standards.

I/O Banks Restrictions

Each I/O bank can simultaneously support multiple I/O standards. The following sections provide guidelines for mixing non-voltage-referenced and voltage-referenced I/O standards in Stratix II and Stratix II GX devices.

Non-Voltage-Referenced Standards

Each Stratix II and Stratix II GX device I/O bank has its own V_{CCIO} pins and supports only one V_{CCIO}, either 1.5, 1.8, 2.5, or 3.3 V. An I/O bank can simultaneously support any number of input signals with different I/O standard assignments, as shown in Table 4–8.

For output signals, a single I/O bank supports non-voltage-referenced output signals that are driving at the same voltage as V_{CCIO}. Since an I/O bank can only have one V_{CCIO} value, it can only drive out that one value for non-voltage-referenced signals. For example, an I/O bank with a 2.5-V V_{CCIO} setting can support 2.5-V standard inputs and outputs and 3.3-V LVCMOS inputs (not output or bidirectional pins).

Table 4–8. Acceptable Input Levels for LVTTL and LVCMOS (Part 1 of 2)

Bank V_{CCIO} (V)	Acceptable Input Levels (V)			
	3.3	2.5	1.8	1.5
3.3	✓	✓ *(1)*		
2.5	✓	✓		

Table 4–8. Acceptable Input Levels for LVTTL and LVCMOS (Part 2 of 2)

Bank V_{CCIO} (V)	Acceptable Input Levels (V)			
	3.3	2.5	1.8	1.5
1.8	✓ (2)	✓ (2)	✓	✓ (1)
1.5	✓ (2)	✓ (2)	✓	✓

Notes to Table 4–8:

(1) Because the input signal does not drive to the rail, the input buffer does not completely shut off, and the I/O current is slightly higher than the default value.

(2) These input values overdrive the input buffer, so the pin leakage current is slightly higher than the default value. To drive inputs higher than V_{CCIO} but less than 4.0 V, disable the PCI clamping diode and select the **Allow LVTTL and LVCMOS input levels to overdrive input buffer** option in the Quartus II software.

Voltage-Referenced Standards

To accommodate voltage-referenced I/O standards, each Stratix II or Stratix II GX device's I/O bank supports multiple V_{REF} pins feeding a common V_{REF} bus. The number of available V_{REF} pins increases as device density increases. If these pins are not used as V_{REF} pins, they cannot be used as generic I/O pins. However, each bank can only have a single V_{CCIO} voltage level and a single V_{REF} voltage level at a given time.

An I/O bank featuring single-ended or differential standards can support voltage-referenced standards as long as all voltage-referenced standards use the same V_{REF} setting.

Because of performance reasons, voltage-referenced input standards use their own V_{CCIO} level as the power source. For example, you can only place 1.5-V HSTL input pins in an I/O bank with a 1.5-V V_{CCIO}.



Refer to the "Stratix II and Stratix II GX I/O Banks" on page 4–20 for details on input V_{CCIO} for voltage-referenced standards.

Voltage-referenced bidirectional and output signals must be the same as the I/O bank's V_{CCIO} voltage. For example, you can only place SSTL-2 output pins in an I/O bank with a 2.5-V V_{CCIO}.



Refer to the "I/O Placement Guidelines" on page 4–36 for details on voltage-referenced I/O standards placement.

Mixing Voltage-Referenced and Non-Voltage-Referenced Standards

An I/O bank can support both non-voltage-referenced and voltage-referenced pins by applying each of the rule sets individually. For example, an I/O bank can support SSTL-18 inputs and 1.8-V inputs and outputs with a 1.8-V V_{CCIO} and a 0.9-V V_{REF}. Similarly, an I/O bank can support 1.5-V standards, 2.5-V (inputs, but not outputs), and HSTL I/O standards with a 1.5-V V_{CCIO} and 0.75-V V_{REF}.

I/O Placement Guidelines

The I/O placement guidelines help to reduce noise issues that may be associated with a design such that Stratix II and Stratix II GX FPGAs can maintain an acceptable noise level on the V_{CCIO} supply. Because Stratix II and Stratix II GX devices require each bank to be powered separately for V_{CCIO}, these noise issues have no effect when crossing bank boundaries and, as such, these rules need not be applied.

This section provides I/O placement guidelines for the programmable I/O standards supported by Stratix II and Stratix II GX devices and includes essential information for designing systems using their devices' selectable I/O capabilities.

V_{REF} Pin Placement Restrictions

There are at least two dedicated V_{REF} pins per I/O bank to drive the V_{REF} bus. Larger Stratix II and Stratix II GX devices have more V_{REF} pins per I/O bank. All V_{REF} pins within one I/O bank are shorted together at device die level.

There are limits to the number of pins that a V_{REF} pin can support. For example, each output pin adds some noise to the V_{REF} level and an excessive number of outputs make the level too unstable to be used for incoming signals.

Restrictions on the placement of single-ended voltage-referenced I/O pads with respect to V_{REF} pins help maintain an acceptable noise level on the V_{CCIO} supply and prevent output switching noise from shifting the V_{REF} rail.

Input Pins
Each V_{REF} pin supports a maximum of 40 input pads.

Output Pins

When a voltage-referenced input or bidirectional pad does not exist in a bank, the number of output pads that can be used in that bank depends on the total number of available pads in that same bank. However, when a voltage-referenced input exists, a design can use up to 20 output pads per V_{REF} pin in a bank.

Bidirectional Pins

Bidirectional pads must satisfy both input and output guidelines simultaneously. The general formulas for input and output rules are shown in Table 4–9.

Table 4–9. Bidirectional Pin Limitation Formulas

Rules	Formulas
Input	<Total number of bidirectional pins> + <Total number of V_{REF} input pins, if any> ≤ 40 per V_{REF} pin
Output	<Total number of bidirectional pins> + <Total number of output pins, if any> – <Total number of pins from smallest OE group, if more than one OE groups> ≤ 20 per V_{REF} pin

- If the same output enable (OE) controls all the bidirectional pads (bidirectional pads in the same OE group are driving in and out at the same time) and there are no other outputs or voltage-referenced inputs in the bank, then the voltage-referenced input is never active at the same time as an output. Therefore, the output limitation rule does not apply. However, since the bidirectional pads are linked to the same OE, the bidirectional pads will all act as inputs at the same time. Therefore, there is a limit of 40 input pads, as follows:

  <Total number of bidirectional pins> + *<Total number of V_{REF} input pins>* ≤ 40 per V_{REF} pin

- If any of the bidirectional pads are controlled by different OE and there are no other outputs or voltage-referenced inputs in the bank, then one group of bidirectional pads can be used as inputs and another group is used as outputs. In such cases, the formula for the output rule is simplified, as follows:

  <Total number of bidirectional pins> – *<Total number of pins from smallest OE group>* ≤ 20 per V_{REF} pin

- Consider a case where eight bidirectional pads are controlled by OE1, eight bidirectional pads are controlled by OE2, six bidirectional pads are controlled by OE3, and there are no other outputs or voltage-referenced inputs in the bank. While this totals 22 bidirectional pads, it is safely allowable because there would be a possible maximum of 16 outputs per V_{REF} pin, assuming the worst case where OE1 and OE2 are active and OE3 is inactive. This is useful for DDR SDRAM applications.

- When at least one additional voltage-referenced input and no other outputs exist in the same V_{REF} group, the bidirectional pad limitation must simultaneously adhere to the input and output limitations. The input rule becomes:

  <Total number of bidirectional pins> + *<Total number of V_{REF} input pins>* ≤ 40 per V_{REF} pin

  Whereas the output rule is simplified as:

  <Total number of bidirectional pins> ≤ 20 per V_{REF} pin

- When at least one additional output exists but no voltage-referenced inputs exist, the output rule becomes:

  <Total number of bidirectional pins> + *<Total number of output pins>* – *<Total number of pins from smallest OE group>* ≤ 20 per V_{REF} pin

- When additional voltage-referenced inputs and other outputs exist in the same V_{REF} group, then the bidirectional pad limitation must again simultaneously adhere to the input and output limitations. The input rule is:

  <Total number of bidirectional pins> + *<Total number of V_{REF} input pins>* ≤ 40 per V_{REF} pin

  Whereas the output rule is given as:

  <Total number of bidirectional pins> + *<Total number of output pins>* – *<Total number of pins from smallest OE group>* ≤ 20 per V_{REF} pin

I/O Pin Placement with Respect to High-Speed Differential I/O Pins

Regardless of whether or not the SERDES circuitry is utilized, there is a restriction on the placement of single-ended output pins with respect to high-speed differential I/O pins. As shown in Figure 4–25, all

single-ended outputs must be placed at least one LAB row away from the differential I/O pins. There are no restrictions on the placement of single-ended input pins with respect to differential I/O pins. Single-ended input pins may be placed within the same LAB row as differential I/O pins. However, the single-ended input's IOE register is not available. The input must be implemented within the core logic.

This single-ended output pin placement restriction only applies when using the LVDS or HyperTransport I/O standards in the left and right I/O banks. There are no restrictions for single-ended output pin placement with respect to differential clock pins in the top and bottom I/O banks.

Figure 4–25. Single-Ended Output Pin Placement with Respect to Differential I/O Pins

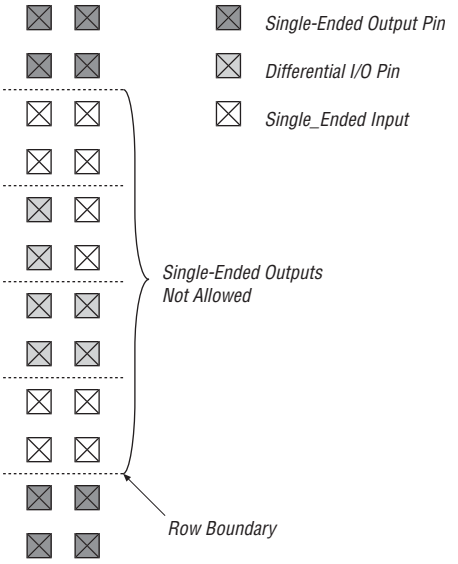

DC Guidelines

Power budgets are essential to ensure the reliability and functionality of a system application. You are often required to perform power dissipation analysis on each device in the system to come out with the total power dissipated in that system, which is composed of a static component and a dynamic component.

The static power consumption of a device is the total DC current flowing from V_{CCIO} to ground.

For any ten consecutive pads in an I/O bank of Stratix II and Stratix II GX devices, Altera recommends a maximum current of 250 mA, as shown in Figure 4–26, because the placement of V_{CCIO}/ground (GND) bumps are regular, 10 I/O pins per pair of power pins. This limit is on the static power consumed by an I/O standard, as shown in Table 4–10. Limiting static power is a way to improve reliability over the lifetime of the device.

Figure 4–26. DC Current Density Restriction *Notes (1), (2)*

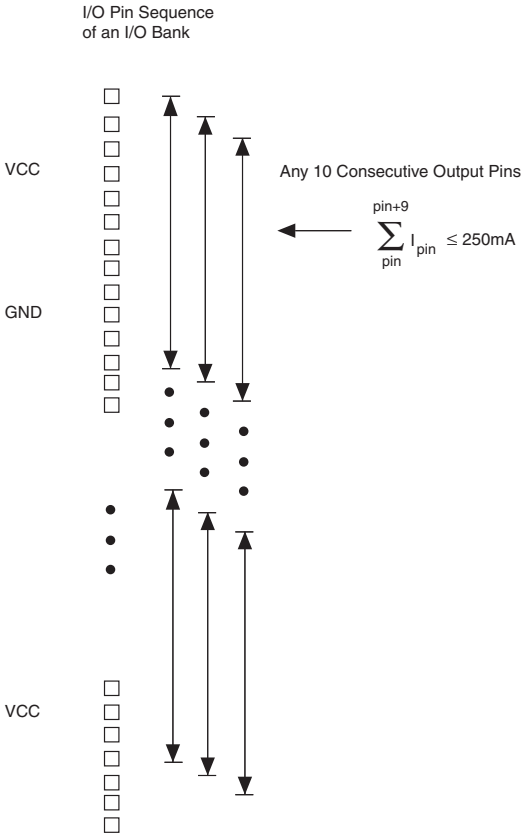

Notes to Figure 4–26:

(1) The consecutive pads do not cross I/O banks.

(2) V_{REF} pins do not affect DC current calculation because there are no V_{REF} pads.

Table 4–10 shows the I/O standard DC current specification.

Table 4–10. Stratix II and Stratix II GX I/O Standard DC Current Specification (Part 1 of 2) *Note (1)*

I/O Standard	I_{PIN} (mA), Top and Bottom I/O Banks	I_{PIN} (mA), Left and Right I/O Banks *(2)*
LVTTL	*(3)*	*(3)*
LVCMOS	*(3)*	*(3)*
2.5 V	*(3)*	*(3)*
1.8 V	*(3)*	*(3)*
1.5 V	*(3)*	*(3)*
3.3-V PCI	1.5	NA
3.3-V PCI-X	1.5	NA
SSTL-2 Class I	12 *(4)*	12 *(4)*
SSTL-2 Class II	24 *(4)*	16 *(4)*
SSTL-18 Class I	12 *(4)*	10 *(4)*
SSTL-18 Class II	20 *(4)*	NA
1.8-V HSTL Class I	12 *(4)*	12
1.8-V HSTL Class II	20 *(4)*	NA
1.5-V HSTL Class I	12 *(4)*	8
1.5-V HSTL Class II	20 *(4)*	NA
Differential SSTL-2 Class I	12	12
Differential SSTL-2 Class II	24	16
Differential SSTL-18 Class I	12	10
Differential SSTL-18 Class II	20	NA
1.8-V differential HSTL Class I	12	12
1.8-V differential HSTL Class II	20	NA
1.5-V differential HSTL Class I	12	8
1.5-V differential HSTL Class II	20	NA

Table 4–10. Stratix II and Stratix II GX I/O Standard DC Current Specification (Part 2 of 2) Note (1)		
I/O Standard	I_{PIN} (mA), Top and Bottom I/O Banks	I_{PIN} (mA), Left and Right I/O Banks (2)

Notes to Table 4–10:

(1) The current value obtained for differential HSTL and differential SSTL standards is per pin and not per differential pair, as opposed to the per-pair current value of LVDS and HyperTransport standards.

(2) This does not apply to the right I/O banks of Stratix II GX devices. Stratix II GX devices have transceivers on the right I/O banks.

(3) The DC power specification of each I/O standard depends on the current sourcing and sinking capabilities of the I/O buffer programmed with that standard, as well as the load being driven. LVTTL, LVCMOS, 2.5-V, 1.8-V, and 1.5-V outputs are not included in the static power calculations because they normally do not have resistor loads in real applications. The voltage swing is rail-to-rail with capacitive load only. There is no DC current in the system.

(4) This I_{PIN} value represents the DC current specification for the default current strength of the I/O standard. The I_{PIN} varies with programmable drive strength and is the same as the drive strength as set in Quartus II software. Refer to the *Stratix II Architecture* chapter in volume 1 of the *Stratix II Device Handbook* or the *Stratix II GX Architecture* chapter in volume 1 of the *Stratix II GX Device Handbook* for a detailed description of the programmable drive strength feature of voltage-referenced I/O standards.

Table 4–10 only shows the limit on the static power consumed by an I/O standard. The amount of power used at any moment could be much higher, and is based on the switching activities.

Conclusion

Stratix II and Stratix II GX devices provide I/O capabilities that allow you to work in compliance with current and emerging I/O standards and requirements. With the Stratix II or Stratix II GX devices features, such as programmable driver strength, you can reduce board design interface costs and increase the development flexibility.

References

Refer to the following references for more information:

- Interface Standard for Nominal 3V / 3.3-V Supply Digital Integrated Circuits, JESD8-B, Electronic Industries Association, September 1999.
- 2.5-V +/- 0.2V (Normal Range) and 1.8-V to 2.7V (Wide Range) Power Supply Voltage and Interface Standard for Non-terminated Digital Integrated Circuits, JESD8-5, Electronic Industries Association, October 1995.
- 1.8-V +/- 0.15 V (Normal Range) and 1.2 V - 1.95 V (Wide Range) Power Supply Voltage and Interface Standard for Non-terminated Digital Integrated Circuits, JESD8-7, Electronic Industries Association, February 1997.
- 1.5-V +/- 0.1 V (Normal Range) and 0.9 V - 1.6 V (Wide Range) Power Supply Voltage and Interface Standard for Non-terminated Digital Integrated Circuits, JESD8-11, Electronic Industries Association, October 2000.

- PCI Local Bus Specification, Revision 2.2, PCI Special Interest Group, December 1998.
- PCI-X Local Bus Specification, Revision 1.0a, PCI Special Interest Group.
- Stub Series Terminated Logic for 2.5-V (SSTL-2), JESD8-9A, Electronic Industries Association, December 2000.
- Stub Series Terminated Logic for 1.8 V (SSTL-18), Preliminary JC42.3, Electronic Industries Association.
- High-Speed Transceiver Logic (HSTL)—A 1.5-V Output Buffer Supply Voltage Based Interface Standard for Digital Integrated Circuits, EIA/JESD8-6, Electronic Industries Association, August 1995.
- Electrical Characteristics of Low Voltage Differential Signaling (LVDS) Interface Circuits, ANSI/TIA/EIA-644, American National Standards Institute/Telecommunications Industry/Electronic Industries Association, October 1995.

Referenced Documents

This chapter references the following documents:

- *DC & Switching Characteristics* chapter in volume 1 of the *Stratix II Device Handbook*
- *DC & Switching Characteristics* chapter in volume 1 of the *Stratix II GX Device Handbook*
- *External Memory Interfaces in Stratix II & Stratix II GX Devices* chapter in volume 2 of the *Stratix II Device Handbook*
- *External Memory Interfaces in Stratix II & Stratix II GX Devices* chapter in volume 2 of the *Stratix II GX Device Handbook*
- *High-Speed Differential I/O Interfaces with DPA in Stratix II & Stratix II GX Devices* chapter in volume 2 of the *Stratix II Device Handbook*
- *High-Speed Differential I/O Interfaces with DPA in Stratix II & Stratix II GX Devices* chapter in volume 2 of the *Stratix II GX Device Handbook*
- *PLLs in Stratix II & Stratix II GX Devices* chapter in volume 2 of the *Stratix II Device Handbook*
- *PLLs in Stratix II & Straix II GX Devices* chapter in volume 2 of the *Stratix II GX Device Handbook*
- *Stratix II Architecture* chapter in volume 1 of the *Stratix II Device Handbook*
- *Stratix II GX Architecture* chapter in volume 1 of the *Stratix II GX Device Handbook*
- *Stratix II GX Transceiver User Guide* (volume 1) of the *Stratix II GX Device Handbook*

Document Revision History

Table 4–11 shows the revision history for this chapter.

Table 4–11. Document Revision History (Part 1 of 2)

Date and Document Version	Changes Made	Summary of Changes
January 2008 v4.6	Updated Figure 4–22.	—
	Updated Note 4 to Table 4–2.	—
	Added "Referenced Documents" section.	—
	Minor text edits.	—
No change	For the *Stratix II GX Device Handbook* only: Formerly chapter 9. The chapter number changed due to the addition of the *Stratix II GX Dynamic Reconfiguration* chapter. No content change.	—
May 2007 v4.5	Added a note to the "On-Chip Series Termination with Calibration" section.	—
	Added a note to the "On-Chip Series Termination without Calibration" section	—
	Updated note to the "Stratix II and Stratix II GX I/O Features" section.	—
	Updated the "LVDS" section.	—
	Updated note to "1.5 V" section	—
	• Updated Note (1) for Table 10–4 • Updated Note (2) for Table 10–3	—
	Updated Table 10–2, column heading for columns 9 and 10.	—
	Updated Table 10–10.	—
	Fixed typo in the "Stratix II and Stratix II GX I/O Features" section	—
February 2007 v4.4	Added the "Document Revision History" section to this chapter.	—
August 2006 v4.3	Updated Table 9–2, Table 9–4, Table 9–5, Table 9–6, and Table 9–7.	—
April 2006 v4.2	Chapter updated as part of the *Stratix II Device Handbook* update.	—
No change	Formerly chapter 8. Chapter number change only due to chapter addition to Section I in February 2006; no content change.	—

Table 4–11. Document Revision History (Part 2 of 2)

Date and Document Version	Changes Made	Summary of Changes
December 2005 v4.1	Chapter updated as part of the *Stratix II Device Handbook* update.	—
October 2005 v4.0	Added chapter to the *Stratix II GX Device Handbook*.	—

5. High-Speed Differential I/O Interfaces with DPA in Stratix II and Stratix II GX Devices

SII52005-2.2

Introduction

Stratix® II and Stratix® II GX device family offers up to 1-Gbps differential I/O capabilities to support source-synchronous communication protocols such as HyperTransport™ technology, Rapid I/O, XSBI, and SPI.

Stratix II and Stratix II GX devices have the following dedicated circuitry for high-speed differential I/O support:

- Differential I/O buffer
- Transmit serializer
- Receive deserializer
- Data realignment circuit
- Dynamic phase aligner (DPA)
- Synchronizer (FIFO buffer)
- Analog PLLs (fast PLLs)

For high-speed differential interfaces, Stratix II and Stratix II GX devices can accommodate different differential I/O standards, including the following:

- LVDS
- HyperTransport technology
- HSTL
- SSTL
- LVPECL



HSTL, SSTL, and LVPECL I/O standards can be used only for PLL clock inputs and outputs in differential mode.

I/O Banks

Stratix II and Stratix II GX inputs and outputs are partitioned into banks located on the periphery of the die. The inputs and outputs that support LVDS and HyperTransport technology are located in row I/O banks, two on the left and two on the right side of the Stratix II device and two on the left side of the Stratix II GX device. LVPECL, HSTL, and SSTL standards are supported on certain top and bottom banks of the die (banks 9 to 12) when used as differential clock inputs/outputs. Differential HSTL and SSTL standards can be supported on banks 3, 4, 7, and 8 if the pins on these banks are used as DQS/DQSn pins. Figures 5–1 and 5–2 show where the banks and the PLLs are located on the die.

Figure 5–1. Stratix II I/O Banks *Note (1), (2), (3), (4), (5), (6), and (7)*

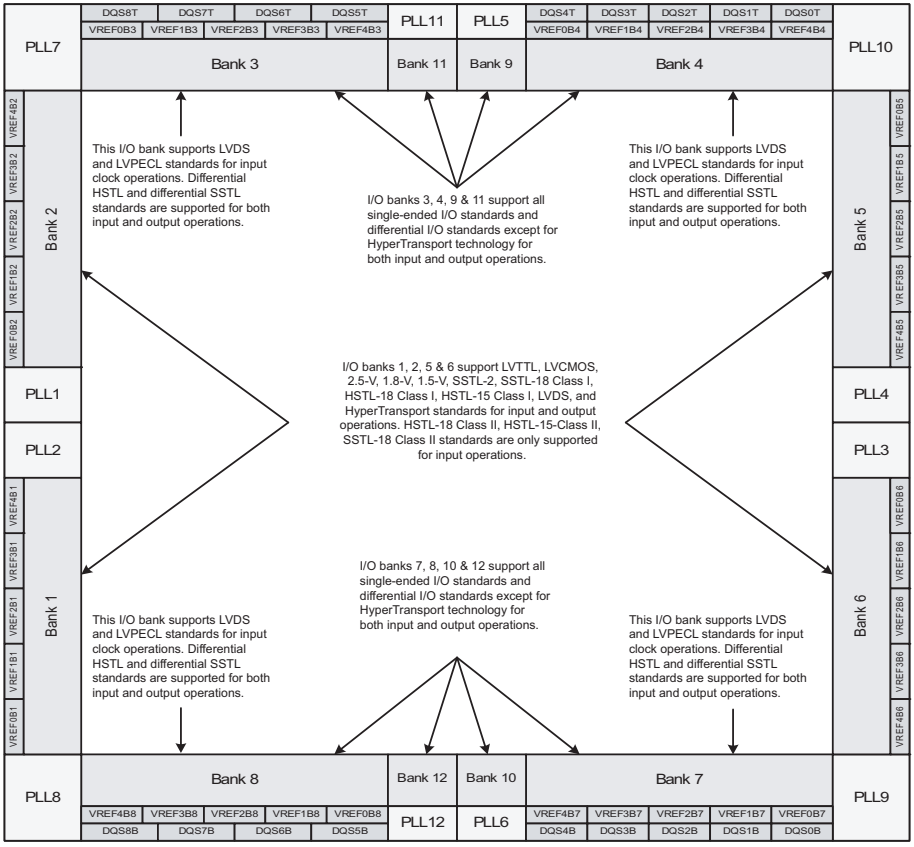

Notes to Figure 5–1:

(1) Figure 5–1 is a top view of the silicon die that corresponds to a reverse view for flip-chip packages. It is a graphical representation only. See the pin list and Quartus II software for exact locations.

(2) Depending on the size of the device, different device members have different numbers of V_{REF} groups.

(3) Banks 9 through 12 are enhanced PLL external clock output banks. These PLL banks utilize the adjacent V_{REF} group when voltage-referenced standards are implemented. For example, if an SSTL input is implemented in PLL bank 10, the voltage level at VREFB7 is the reference voltage level for the SSTL input.

(4) Differential HSTL and differential SSTL standards are available for bidirectional operations on DQS pin and input-only operations on PLL clock input pins; LVDS, LVPECL, and HyperTransport standards are available for input-only operations on PLL clock input pins. See the *Selectable I/O standards in Stratix II & Stratix II GX Devices* chapter in volume 2 of the *Stratix II Device Handbook* for more details.

(5) Quartus II software does not support differential SSTL and differential HSTL standards at left/right I/O banks. See the *Selectable I/O standards in Stratix II & Stratix II GX Devices* chapter in volume 2 of the *Stratix II Device Handbook* if you need to implement these standards at these I/O banks.

(6) Banks 11 and 12 are available only in EP2S60, EP2S90, EP2S130, and EP2S180 devices.

(7) PLLs 7, 8, 9, 10, 11, and 12 are available only in EP2S60, EP2S90, EP2S130, and EP2S180 devices.

***Figure 5–2. Stratix II GX I/O Banks** Note (1), (2), (3), (4), (5), (6), and (7)*

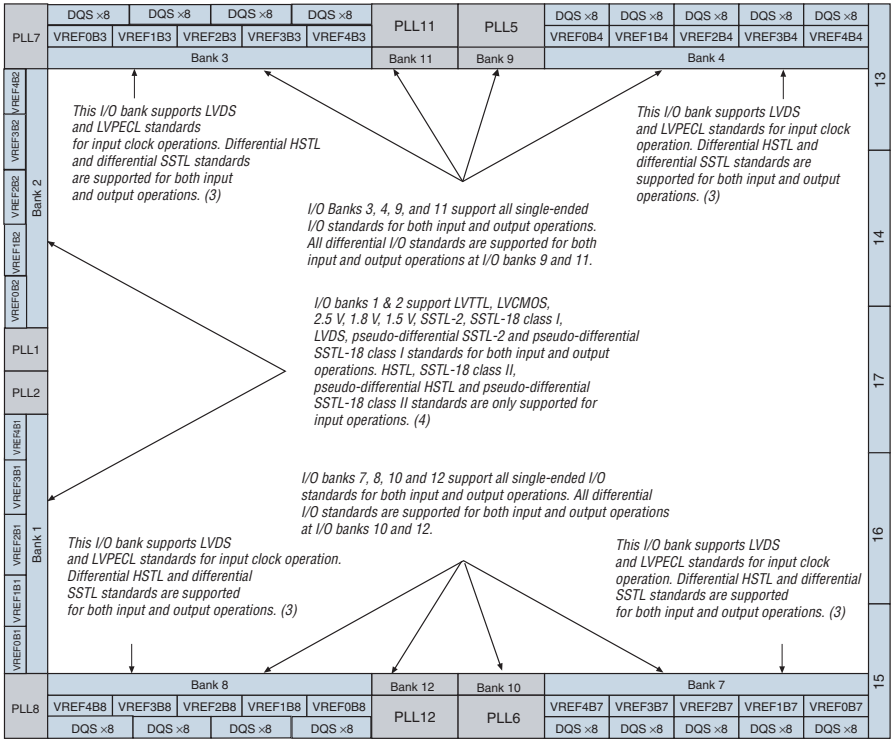

Notes to Figure 5–2:

(1) Figure 5–2 is a top view of the silicon die which corresponds to a reverse view for flip-chip packages. It is a graphical representation only.

(2) Depending on size of the device, different device members have different number of V_{REF} groups. Refer to the pin list and the Quartus II software for exact locations.

(3) Banks 9 through 12 are enhanced PLL external clock output banks.

(4) Horizontal I/O banks feature transceiver and DPA circuitry for high speed differential I/O standards.

(5) Quartus II software does not support differential SSTL and differential HSTL standards at left/right I/O banks. Refer to the "Differential Pin Placement Guidelines" on page 5–21 if you need to implement these standards at these I/O banks.

(6) Banks 11 and 12 are available only in EP2SGX60C/D/E, EP2SGX90E/F, and EP2SGX130G.

(7) PLLs 7, 8, 11, and 12 are available only in EP2SGX60C/D/E, EP2SGXE/F, and EP2SGX130G.

Table 5–1 lists the differential I/O standards supported by each bank.

Table 5–1. Supported Differential I/O Types

Bank	Row I/O (Banks 1, 2, 5 and 6) (2)			Column I/O (Banks, 3, 4 and 7 through 12)		
Type	Clock Inputs	Clock Outputs	Data or Regular I/O Pins	Clock Inputs	Clock Outputs	Data or Regular I/O Pins
Differential HSTL				✓	✓	(1)
Differential SSTL				✓	✓	(1)
LVPECL				✓	✓	
LVDS	✓	✓	✓	✓	✓	
HyperTransport technology	✓	✓	✓			

Note to Table 5–1:
(1) Used as both inputs and outputs on the DQS/DQSn pins.
(2) Banks 5 and 6 are not available in Stratix II GX devices.

Table 5–2 shows the total number of differential channels available in Stratix II devices. The available channels are divided evenly between the left and right banks of the die. Non-dedicated clocks in the left and right banks can also be used as data receiver channels. The total number of receiver channels includes these four non-dedicated clock channels. Pin migration is available for different size devices in the same package.

Table 5–2. Differential Channels in Stratix II Devices (Part 1 of 2) Notes (1), (2), and (3)

Device	484-Pin FineLine BGA	484-Pin Hybrid FineLine BGA	672-Pin FineLine BGA	780-Pin FineLine BGA	1,020-Pin FineLine BGA	1,508-Pin FineLine BGA Within the 1,508-pin Fin
EP2S15	38 transmitters 42 receivers		38 transmitters 42 receivers			
EP2S30	38 transmitters 42 receivers		58 transmitters 62 receivers			
EP2S60	38 transmitters 42 receivers		58 transmitters 62 receivers		84 transmitters 84 receivers	
EP2S90		38 transmitters 42 receivers		64 transmitters 68 receivers	90 transmitters 94 receivers	118 transmitters 118 receivers
EP2S130				64 transmitters 68 receivers	88 transmitters 92 receivers	156 transmitters 156 receivers

Table 5–2. Differential Channels in Stratix II Devices (Part 2 of 2) Notes (1), (2), and (3)						
Device	**484-Pin FineLine BGA**	**484-Pin Hybrid FineLine BGA**	**672-Pin FineLine BGA**	**780-Pin FineLine BGA**	**1,020-Pin FineLine BGA**	**1,508-Pin FineLine BGA Within the 1,508-pin Fin**
EP2S180					88 transmitters 92 receivers	156 transmitters 156 receivers

Notes to Table 5–2:
(1) Pin count does not include dedicated PLL input pins.
(2) The total number of receiver channels includes the four non-dedicated clock channels that can optionally be used as data channels.
(3) Within the 1,508-pin FineLine BGA package, 92 receiver channels and 92 transmitter channels are vertically migratable.

Table 5–3 shows the total number of differential channels available in Stratix II GX devices. Non-dedicated clocks in the left bank can also be used as data receiver channels. The total number of receiver channels includes these four non-dedicated clock channels. Pin migration is available for different size devices in the same package.

Table 5–3. Differential Channels in Stratix II GX Devices Notes (1), (2), (3)			
Device	**780-Pin FineLine BGA**	**1,152-Pin FineLine BGA**	**1,508-Pin FineLine BGA**
EP2SGX30	29 transmitters 31receivers		
EP2SGX60	29 transmitters 31 receivers	42 transmitters 42 receivers	
EP2SGX90		45 transmitters 47 receivers	59 transmitters 59 receivers
EP2SGX130			71 transmitters 73 receivers

Notes to Table 5–3:
(1) Pin count does not include dedicated PLL input pins.
(2) The total number of receiver channels includes the four non-dedicated clock channels that can optionally be used as data channels.
(3) EP2SGX30CF780 devices with four transceiver channels are vertically migratable to EP2SGX60CF780 devices with four transceiver channels. EP2SGX30DF780 devices with eight transceiver channels are vertically migratable to EP2SGX60DF780 devices with eight transceiver channels. EP2SGX60EF1152 devices with 12 transceiver channels are vertically migratable to EP2SGX90EF1152 devices with 12 transceiver channels. EP2SGX90FF1508 devices with 16 transceiver channels are vertically migratable to EP2SGX130GF1508 devices with 20 transceiver channels.

Differential Transmitter

The Stratix II and Stratix II GX transmitter has dedicated circuitry to provide support for LVDS and HyperTransport signaling. The dedicated circuitry consists of a differential buffer, a serializer, and a shared fast PLL. The differential buffer can drive out LVDS or HyperTransport signal levels that are statically set in the Quartus® II software. The serializer takes data from a parallel bus up to 10 bits wide from the internal logic, clocks it into the load registers, and serializes it using the shift registers before sending the data to the differential buffer. The most significant bit (MSB) is transmitted first. The load and shift registers are clocked by the `diffioclk` (a fast PLL clock running at the serial rate) and controlled by the load enable signal generated from the fast PLL. The serialization factor can be statically set to ×4, ×5, ×6, ×7, ×8, ×9, or ×10 using the Quartus II software. The load enable signal is automatically generated by the fast PLL and is derived from the serialization factor setting. Figure 5–3 is a block diagram of the Stratix II transmitter.

Figure 5–3. Transmitter Block Diagram

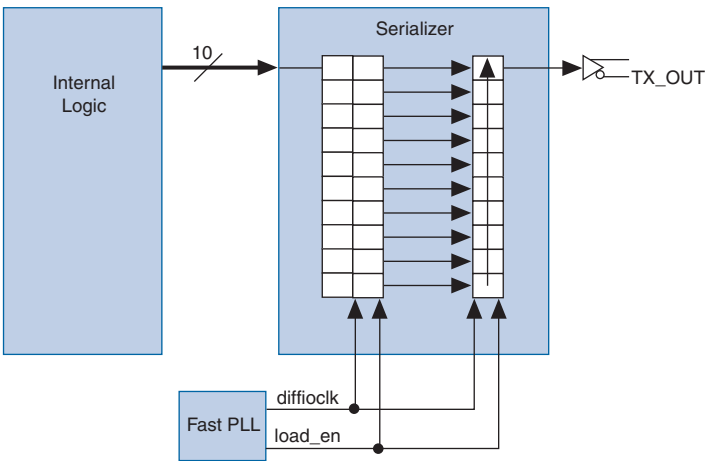

Each Stratix II and Stratix II GX transmitter data channel can be configured to operate as a transmitter clock output. This flexibility allows the designer to place the output clock near the data outputs to simplify board layout and reduce clock-to-data skew. Different applications often require specific clock to data alignments or specific data rate to clock rate factors. The transmitter can output a clock signal at the same rate as the data with a maximum frequency of 717 MHz. The output clock can also be divided by a factor of 2, 4, 8, or 10, depending on the serialization factor. The phase of the clock in relation to the data can be set at 0° or 180° (edge or center aligned). The fast PLL provides additional support for

other phase shifts in 45° increments. These settings are made statically in the Quartus II MegaWizard® software. Figure 5–4 shows the transmitter in clock output mode.

Figure 5–4. Transmitter in Clock Output Mode

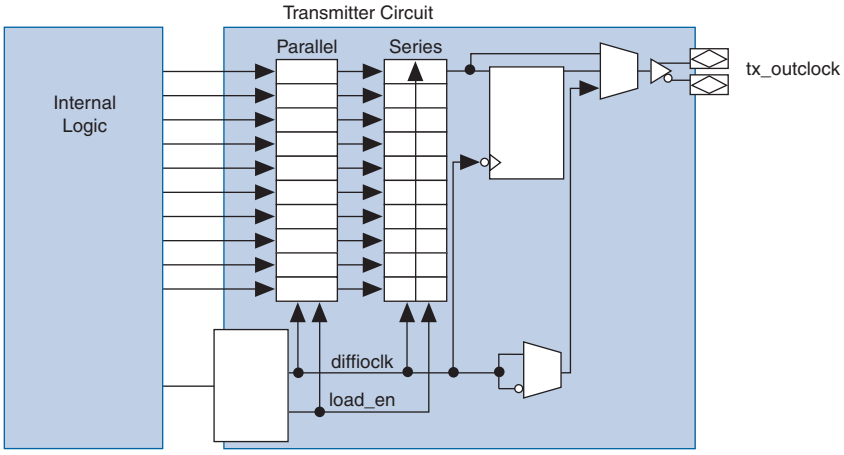

The serializer can be bypassed to support DDR (×2) and SDR (×1) operations. The I/O element (IOE) contains two data output registers that each can operate in either DDR or SDR mode. The clock source for the registers in the IOE can come from any routing resource, from the fast PLL, or from the enhanced PLL. Figure 5–5 shows the bypass path.

Figure 5–5. Serializer Bypass

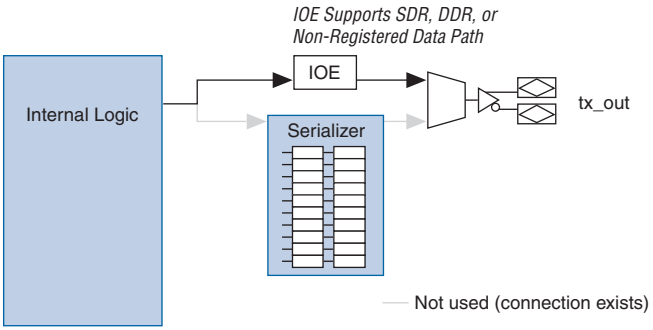

Differential Receiver

The receiver has dedicated circuitry to support high-speed LVDS and HyperTransport signaling, along with enhanced data reception. Each receiver consists of a differential buffer, dynamic phase aligner (DPA), synchronization FIFO buffer, data realignment circuit, deserializer, and a shared fast PLL. The differential buffer receives LVDS or HyperTransport signal levels, which are statically set by the Quartus II software. The DPA block aligns the incoming data to one of eight clock phases to maximize the receiver's skew margin. The DPA circuit can be bypassed on a channel-by-channel basis if it is not needed. Set the DPA bypass statically in the Quartus II MegaWizard Plug-In Manager or dynamically by using the optional RX_DPLL_ENABLE port.

The synchronizer circuit is a 1-bit wide by 6-bit deep FIFO buffer that compensates for any phase difference between the DPA block and the deserializer. If necessary, the data realignment circuit inserts a single bit of latency in the serial bit stream to align the word boundary. The deserializer includes shift registers and parallel load registers, and sends a maximum of 10 bits to the internal logic. The data path in the receiver is clocked by either the diffioclk signal or the DPA recovered clock. The deserialization factor can be statically set to 4, 5, 6, 7, 8, 9, or 10 by using the Quartus II software. The fast PLL automatically generates the load enable signal, which is derived from the deserialization factor setting.

Figure 5–6 shows a block diagram of the receiver.

Figure 5–6. Receiver Block Diagram

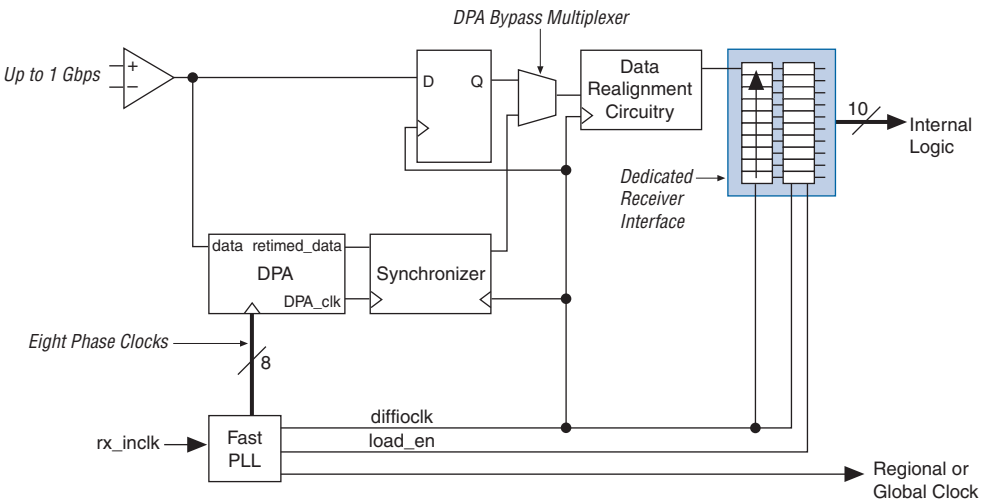

The deserializer, like the serializer, can also be bypassed to support DDR (×2) and SDR (×1) operations. The DPA and data realignment circuit cannot be used when the deserializer is bypassed. The IOE contains two data input registers that can operate in DDR or SDR mode. The clock source for the registers in the IOE can come from any routing resource, from the fast PLL, or from the enhanced PLL. Figure 5–7 shows the bypass path.

Figure 5–7. Deserializer Bypass

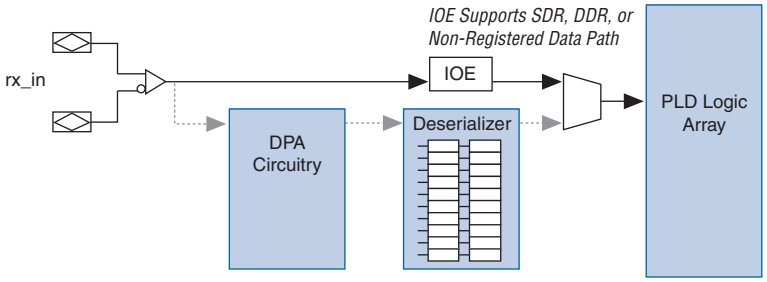

Receiver Data Realignment Circuit

The data realignment circuit aligns the word boundary of the incoming data by inserting bit latencies into the serial stream. An optional RX_CHANNEL_DATA_ALIGN port controls the bit insertion of each receiver independently controlled from the internal logic. The data slips one bit for every pulse on the RX_CHANNEL_DATA_ALIGN port. The following are requirements for the RX_CHANNEL_DATA_ALIGN port:

- The minimum pulse width is one period of the parallel clock in the logic array.
- The minimum low time between pulses is one period of parallel clock.
- There is no maximum high or low time.
- Valid data is available two parallel clock cycles after the rising edge of RX_CHANNEL_DATA_ALIGN.

Figure 5–8 shows receiver output (RX_OUT) after one bit slip pulse with the deserialization factor set to 4.

Figure 5–8. Data Realignment Timing

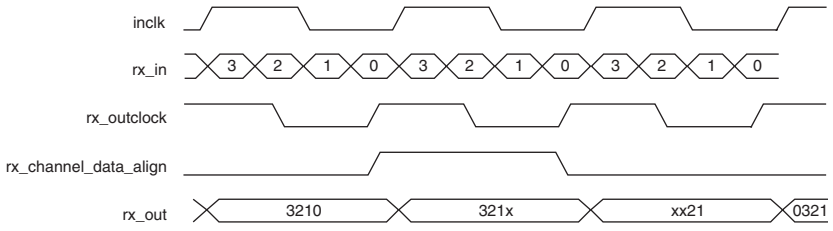

The data realignment circuit can have up to 11 bit-times of insertion before a rollover occurs. The programmable bit rollover point can be from 1 to 11 bit-times independent of the deserialization factor. An optional status port, rx_cda_max, is available to the FPGA from each channel to indicate when the preset rollover point is reached.

Figure 5–9 illustrates a preset value of four bit-times before rollover occurs. The rx_cda_max signal pulses for one rx_outclk cycle to indicate that the rollover has occurred.

Figure 5–9. Receiver Data Re-alignment Rollover

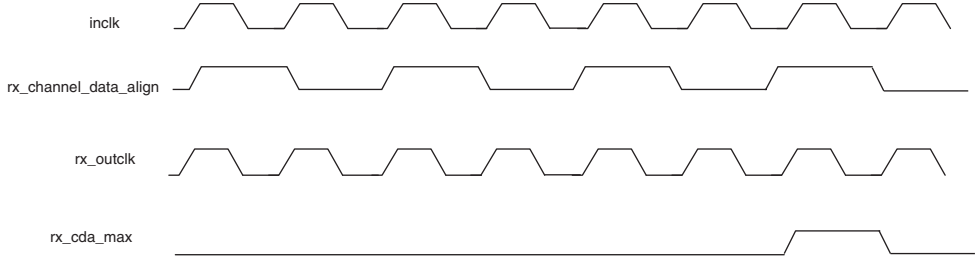

Dynamic Phase Aligner

The DPA block takes in high-speed serial data from the differential input buffer and selects one of eight phase clocks to sample the data. The DPA chooses a phase closest to the phase of the serial data. The maximum phase offset between the data and the phase-aligned clock is 1/8 UI, which is the maximum quantization error of the DPA. The eight phases

are equally divided, giving a 45-degree resolution. Figure 5–10 shows the possible phase relationships between the DPA clocks and the incoming serial data.

Figure 5–10. DPA Clock Phase to Data Bit Relationship

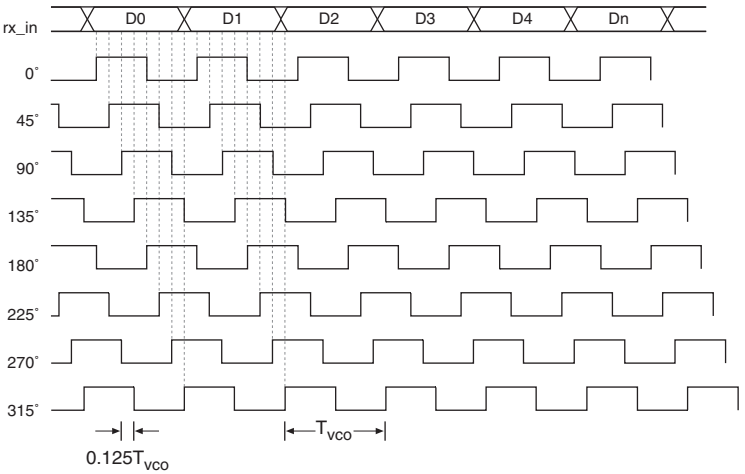

Each DPA block continuously monitors the phase of the incoming data stream and selects a new clock phase if needed. The selection of a new clock phase can be prevented by the optional RX_DPLL_HOLD port, which is available for each channel.

The DPA block requires a training pattern and a training sequence of at least 256 repetitions of the training pattern. The training pattern is not fixed, so you can use any training pattern with at least one transition on each channel. An optional output port, RX_DPA_LOCKED, is available to the internal logic, to indicate when the DPA block has settled on the closest phase to the incoming data phase. The RX_DPA_LOCKED de-asserts, depending on what is selected in the Quartus II MegaWizard Plug-In, when either a new phase is selected, or when the DPA has moved two phases in the same direction. The data may still be valid even when the RX_DPA_LOCKED is deasserted. Use data checkers to validate the data when RX_DPA_LOCKED is deasserted.

An independent reset port, RX_RESET, is available to reset the DPA circuitry. The DPA circuit must be retrained after reset.

Synchronizer

The synchronizer is a 1-bit × 6-bit deep FIFO buffer that compensates for the phase difference between the recovered clock from the DPA circuit and the `diffioclk` that clocks the rest of the logic in the receiver. The synchronizer can only compensate for phase differences, not frequency differences between the data and the receiver's `INCLK`. An optional port, `RX_FIFO_RESET`, is available to the internal logic to reset the synchronizer. The synchronizer is automatically reset when the DPA first locks to the incoming data. Altera® recommends using `RX_FIFO_RESET` to reset the synchronizer when the DPA signals a loss-of-lock condition beyond the initial locking condition.

Differential I/O Termination

Stratix II and Stratix II GX devices provide an on-chip 100-Ω differential termination option on each differential receiver channel for LVDS and HyperTransport standards. The on-chip termination eliminates the need to supply an external termination resistor, simplifying the board design and reducing reflections caused by stubs between the buffer and the termination resistor. You can enable on-chip termination in the Quartus II assignments editor. Differential on-chip termination is supported across the full range of supported differential data rates.

For more information, refer to the High-Speed I/O Specifications section of the *DC & Switching Characteristics* chapter in volume 1 of the *Stratix II Device Handbook* or the High-Speed I/O Specifications section of the *DC & Switching Characteristics* chapter in volume 1 of the *Stratix II GX Device Handbook*.

Figure 5–11 illustrates on-chip termination.

Figure 5–11. On-Chip Differential Termination

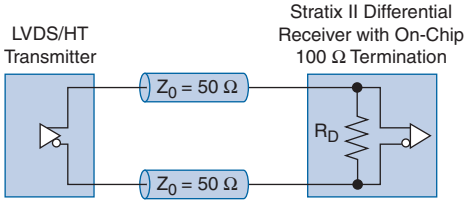

On-chip differential termination is supported on all row I/O pins and on clock pins `CLK[0, 2, 8, 10]`. The clock pins `CLK[1, 3, 9, 11]`, and `FPLL[7..10]CLK`, and the clocks in the top and bottom I/O banks (`CLK[4..7, 12..15]`) do not support differential on-chip termination.

Fast PLL

The high-speed differential I/O receiver and transmitter channels use the fast PLL to generate the parallel global clocks (`rx-` or `tx-` clock) and high-speed clocks (`diffioclk`). Figure 5–12 shows the locations of the fast PLLs. The fast PLL VCO operates at the clock frequency of the data rate. Each fast PLL offers a single serial data rate support, but up to two separate serialization and/or deserialization factors (from the C0 and C1 fast PLL clock outputs) can be used. Clock switchover and dynamic fast PLL reconfiguration is available in high-speed differential I/O support mode.

For additional information on the fast PLL, refer to the *PLLs in Stratix II & Stratix II GX Devices* chapter in volume 2 of the *Stratix II Handbook* or the *PLLs in Stratix II & Stratix II GX Devices* chapter in volume 2 of the *Stratix II GX Handbook*.

Figure 5–12 shows a block diagram of the fast PLL in high-speed differential I/O support mode.

Figure 5–12. Fast PLL Block Diagram

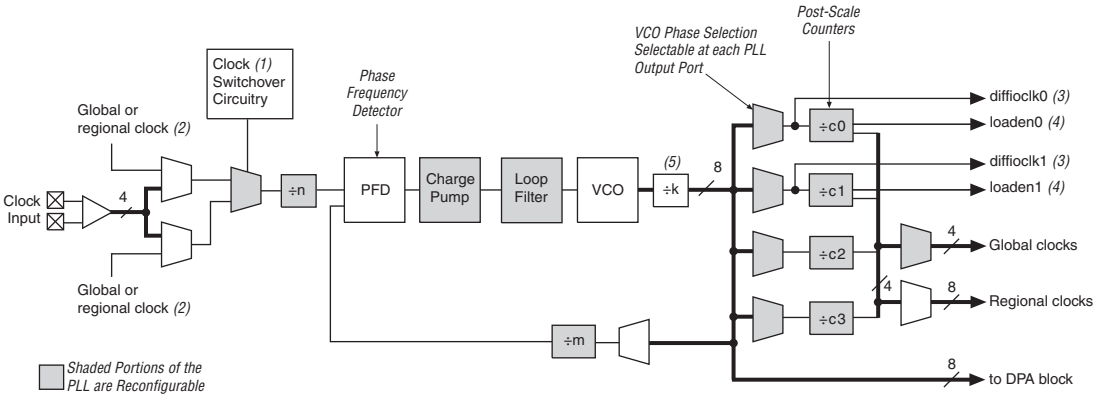

Notes to Figure 5–12:

(1) Stratix II fast PLLs only support manual clock switchover.

(2) The global or regional clock input can be driven by an output from another PLL, a pin-driven dedicated global or regional clock, or through a clock control block provided the clock control block is fed by an output from another PLL or pin-driven dedicated global or regional clock.

(3) In high-speed differential I/O support mode, this high-speed PLL clock feeds the SERDES. Stratix II devices only support one rate of data transfer per fast PLL in high-speed differential I/O support mode.

(4) This signal is a high-speed differential I/O support SERDES control signal.

(5) If the design enables this ÷2 counter, the device can use a VCO frequency range of 150 to 520 MHz.

Clocking

The fast PLLs feed in to the differential receiver and transmitter channels through the LVDS/DPA clock network. The center fast PLLs can independently feed the banks above and below them. The corner PLLs can feed only the banks adjacent to them. Figures 5–13 and 5–14 show the LVDS and DPA clock networks of the Stratix II devices.

Figure 5–13. Fast PLL and LVDS/DPA Clock for EP2S15, EP2S30, and EP2S60 Devices *Note (1)*

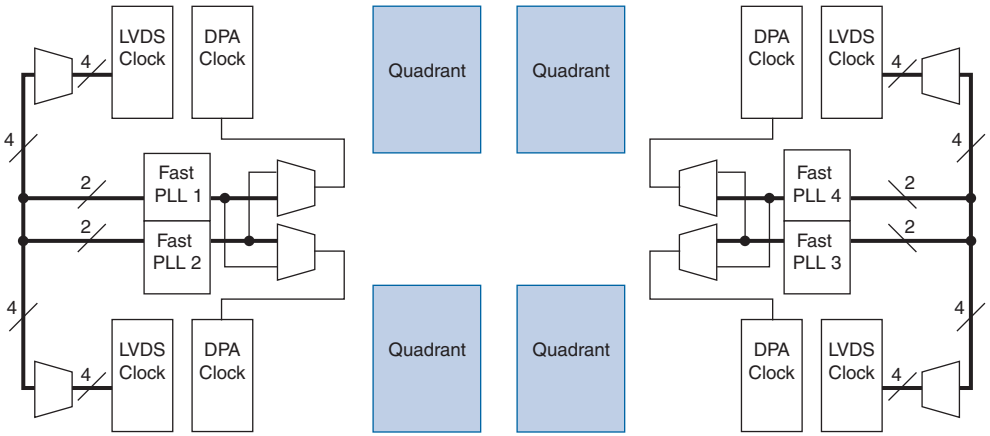

Note to Figure 5–13:
(1) Figure 5–13 applies to EP2S60 devices in the 484 and 672 pin packages.

Figure 5–14. Fast PLL and LVDS/DPA Clocks for EP2S60, EP2S90, EP2S130 and EP2S180 Devices Note (1)

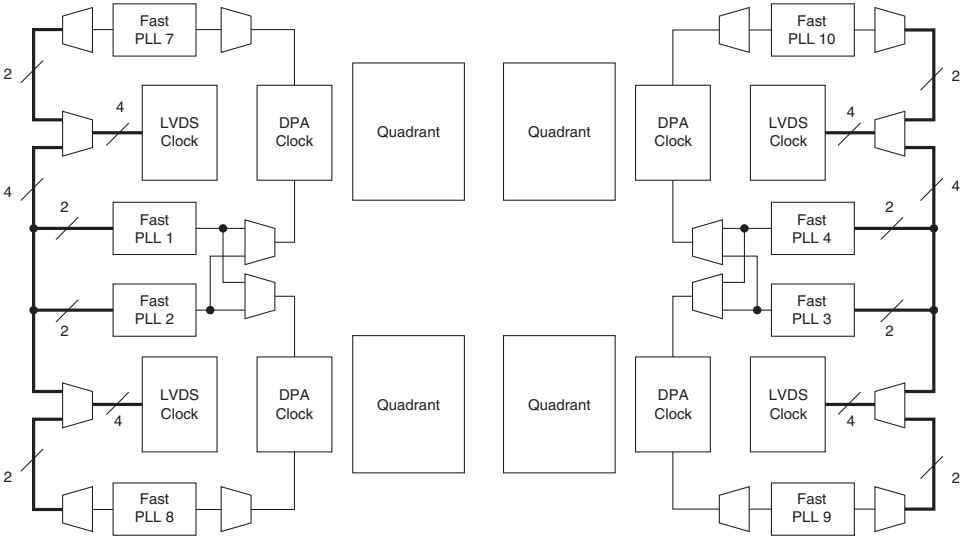

Note to Figure 5–14:
(1) Figure 5–14 applies only to the EP2S60 in the 1020 Stratix II GX device.

Figures 5–15 and 5–16 show the Fast PLL and LVDS/DPA clock of the Stratix II GX devices.

Figure 5–15. Fast PLL and LVDS/DPA Clock for EP2SGX30C/D and EP2SGX60C/D Devices

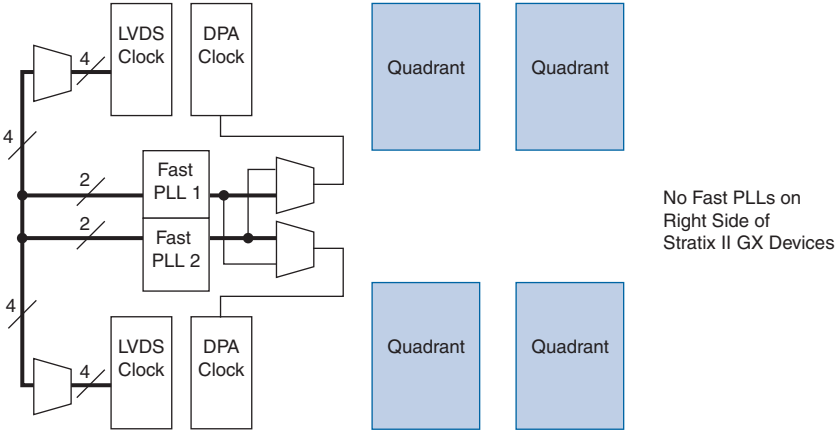

Figure 5–16. Fast PLL and LVDS/DPA Clocks for EP2SGX60E, EP2SGX90 and EP2SGX130 Devices

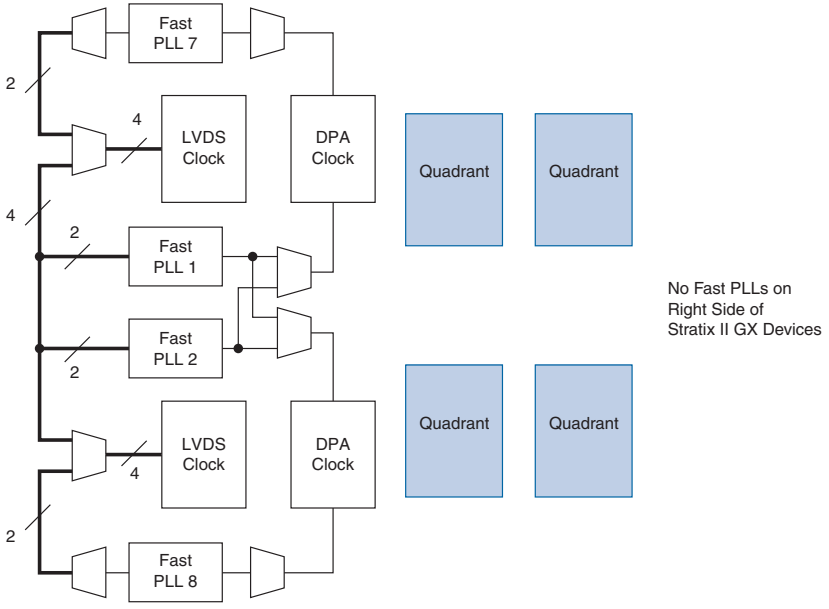

Source Synchronous Timing Budget

This section discusses the timing budget, waveforms, and specifications for source-synchronous signaling in Stratix II and Stratix II GX devices. LVDS and HyperTransport I/O standards enable high-speed data transmission. This high data transmission rate results in better overall system performance. To take advantage of fast system performance, it is important to understand how to analyze timing for these high-speed signals. Timing analysis for the differential block is different from traditional synchronous timing analysis techniques.

Rather than focusing on clock-to-output and setup times, source-synchronous timing analysis is based on the skew between the data and the clock signals. High-speed differential data transmission requires the use of timing parameters provided by IC vendors and is strongly influenced by board skew, cable skew, and clock jitter. This section defines the source-synchronous differential data orientation timing parameters, the timing budget definitions for Stratix II and Stratix II GX devices, and how to use these timing parameters to determine a design's maximum performance.

Differential Data Orientation

There is a set relationship between an external clock and the incoming data. For operation at 1 Gbps and SERDES factor of 10, the external clock is multiplied by 10, and phase-alignment can be set in the PLL to coincide with the sampling window of each data bit. The data is sampled on the falling edge of the multiplied clock. Figure 5–17 shows the data bit orientation of the ×10 mode.

Figure 5–17. Bit Orientation in the Quartus II Software

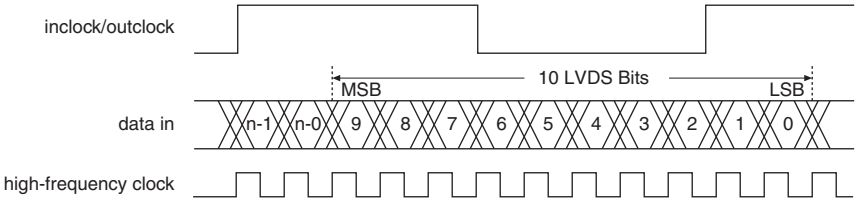

Differential I/O Bit Position

Data synchronization is necessary for successful data transmission at high frequencies. Figure 5–18 shows the data bit orientation for a channel operation. These figures are based on the following:

- SERDES factor equals clock multiplication factor
- Edge alignment is selected for phase alignment
- Implemented in hard SERDES

For other serialization factors use the Quartus II software tools and find the bit position within the word. The bit positions after deserialization are listed in Table 5–4.

Figure 5–18 also shows a functional waveform. Timing waveforms may produce different results. Altera recommends performing a timing simulation to predict actual device behavior.

Figure 5–18. Bit Order for One Channel of Differential Data

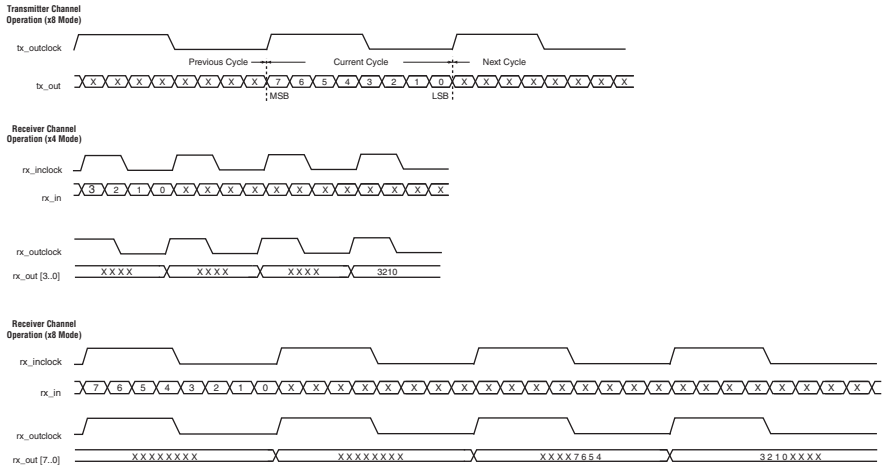

Table 5–4 shows the conventions for differential bit naming for 18 differential channels. The MSB and LSB positions increase with the number of channels used in a system.

Table 5–4. LVDS Bit Naming

Receiver Channel Data Number	Internal 8-Bit Parallel Data	
	MSB Position	LSB Position
1	7	0
2	15	8
3	23	16
4	31	24
5	39	32
6	47	40
7	55	48
8	63	56
9	71	64
10	79	72
11	87	80
12	95	88
13	103	96
14	111	104
15	119	112
16	127	120
17	135	128
18	143	136

Receiver Skew Margin for Non-DPA

Changes in system environment, such as temperature, media (cable, connector, or PCB) loading effect, the receiver's setup and hold times, and internal skew, reduce the sampling window for the receiver. The timing margin between the receiver's clock input and the data input sampling window is called Receiver Skew Margin (RSKM). Figure 5–19 shows the relationship between the RSKM and the receiver's sampling window.

TCCS, RSKM, and the sampling window specifications are used for high-speed source-synchronous differential signals without DPA. When using DPA, these specifications are exchanged for the simpler single DPA jitter tolerance specification. For instance, the receiver skew is why each input with DPA selects a different phase of the clock, thus removing the requirement for this margin.

Figure 5–19. Differential High-Speed Timing Diagram and Timing Budget for Non-DPA

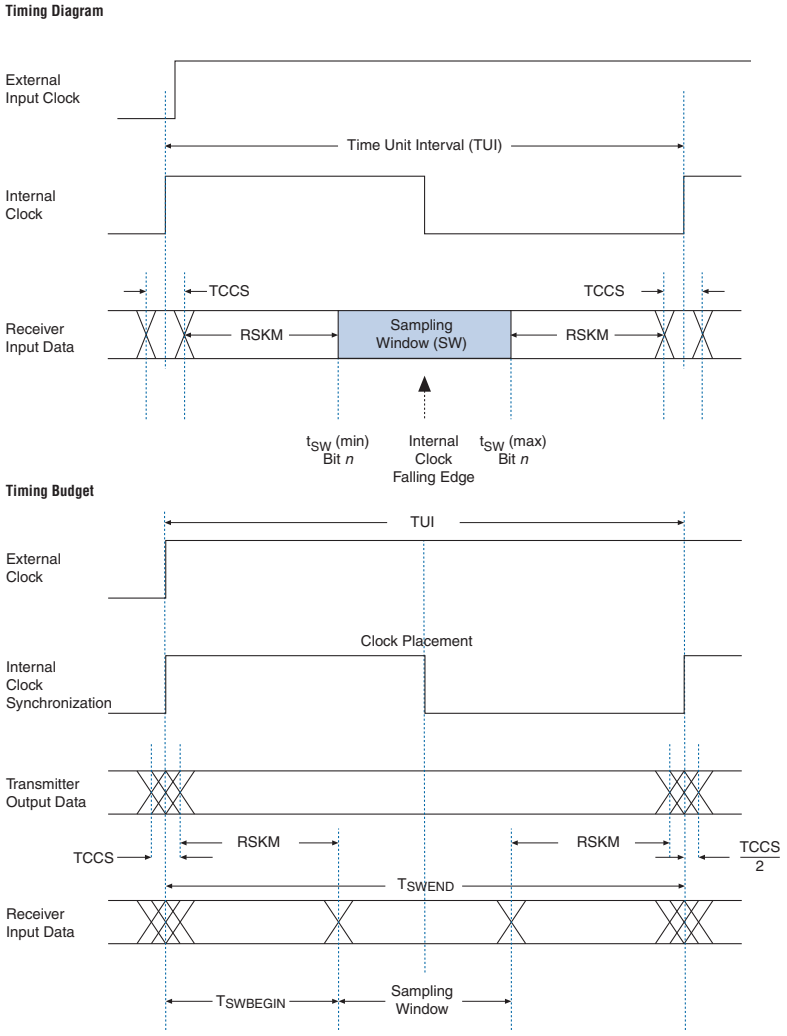

Differential Pin Placement Guidelines

In order to ensure proper high-speed operation, differential pin placement guidelines have been established. The Quartus II compiler automatically checks that these guidelines are followed and will issue an error message if these guidelines are not met. PLL driving distance information is separated into guidelines with and without DPA usage.

High-Speed Differential I/Os and Single-Ended I/Os

When a differential channel or channels of side banks are used (with or without DPA), you must adhere to the guidelines described in the following sections.

- Single-ended I/Os are allowed in the same bank as the LVDS channels (with or without DPA) as long as the single-ended I/O standard uses the same V_{CCIO} as the LVDS bank.
- Single-ended inputs can be in the same LAB row. Outputs cannot be on the same LAB row with LVDS I/Os. If input registers are used in the IOE, single-ended inputs cannot be in the same LAB row as an LVDS SERDES block.
- LVDS (non-SERDES) I/Os are allowed in the same row as LVDS SERDES but the use of IOE registers are not allowed.
- Single-ended outputs are limited to 120 mA drive strength on LVDS banks (with or without DPA).
    - LVTTL equation for maximum number of I/Os in an LVDS bank:
        - 120 mA = (number of LVTTL outputs) × (drive strength of each LVTTL output)
    - SSTL-2 equation:
        - 120 mA = (number of SSTL-2 I/Os) × (drive strength of each output) ÷ 2
    - LVTTL and SSTL-2 mix equation:
        - 120 mA= (total drive strength of all LVTTL outputs) + (total drive strength of all SSTL2 outputs) ÷ 2
- Single-ended inputs can be in the same LAB row as a differential channel using the SERDES circuitry; however, IOE input registers are not available for the single-ended I/Os placed in the same LAB row as differential I/Os. The same rule for input registers applies for non-SERDES differential inputs placed within the same LAB row as a SERDES differential channel. The input register must be implemented within the core logic. The same rule for input registers applies for non-SERDES differential inputs placed within the same LAB row as a SERDES differential channel.

- Single-ended output pins must be at least one LAB row away from differential output pins, as shown in Figure 5–20.

Figure 5–20. Single-Ended Output Pin Placement with Respect to Differential I/O Pins

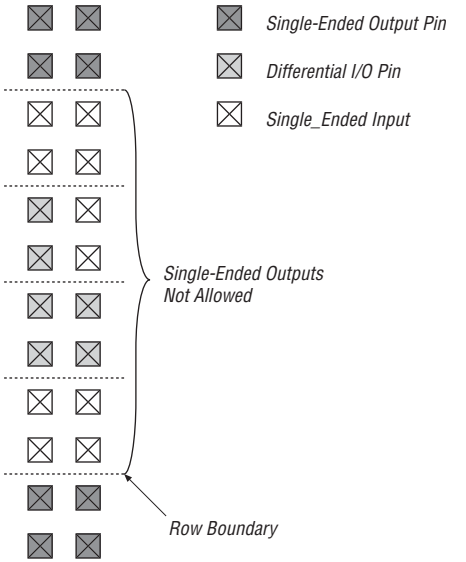

DPA Usage Guidelines

The Stratix II and Stratix II GX device have differential receivers and transmitters on the Row banks of the device. Each receiver has a dedicated DPA circuit to align the phase of the clock to the data phase of its associated channel. When a channel or channels of left or right banks are used in DPA mode, the guidelines listed below must be adhered to.

Fast PLL/DPA Channel Driving Distance

- Each fast PLL can drive up to 25 contiguous rows in DPA mode in a single bank (not including the reference clock row). The unbonded SERDES I/O rows are included in the 25 row calculation. These channels can be anywhere in the bank, their distance from the PLL is not relevant, but the channels must be within 25 rows of each other.

- Unused channels can be within the 25 row span, but all used channels must be in DPA mode from the same fast PLL. Center fast PLLs can drive two I/O banks simultaneously, up to 50 channels (25 on the upper bank and 25 on the lower bank) as shown in Figure 5–21.
- If one center fast PLL drives DPA channels in the upper and lower banks, the other center fast PLL cannot be used for DPA.

Figure 5–21. Driving Capabilities of a Center Fast PLL

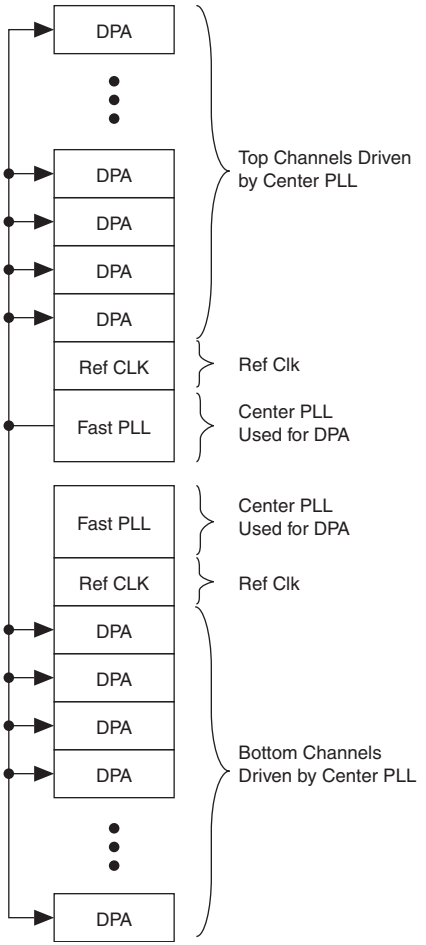

Using Corner and Center Fast PLLs

- If a differential bank is being driven by two fast PLLs, where the corner PLL is driving one group and the center fast PLL is driving another group, there must be at least 1 row of separation between the two groups of DPA channels (see Figure 5–22). The two groups can operate at independent frequencies. Not all the channels are bonded out of the die. Each LAB row is considered a channel, whether or not it has I/O support.
- No separation is necessary if a single fast PLL is driving DPA channels as well as non-DPA channels as long as the DPA channels are contiguous.

Figure 5–22. Usage of Corner and Center Fast PLLs Driving DPA Channels in a Single Bank

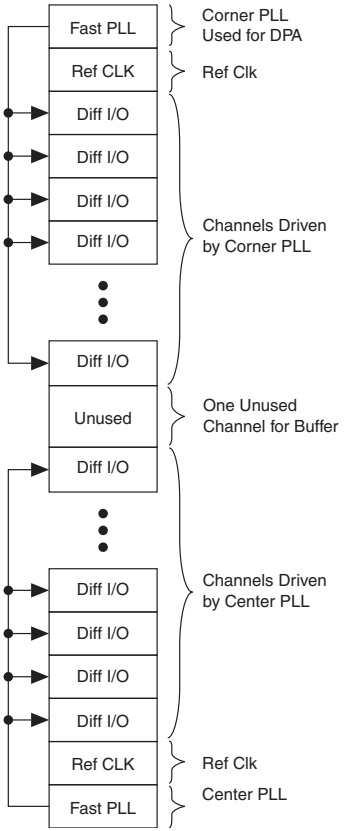

Using Both Center Fast PLLs

- Both center fast PLLs can be used for DPA as long as they drive DPA channels in their adjacent quadrant only. See Figure 5–23.
- Both center fast PLLs cannot be used for DPA if one of the fast PLLs drives the top and bottom banks, or if they are driving cross banks (e.g., the lower fast PLL drives the top bank and the top fast PLL drives the lower bank).

Figure 5–23. Center Fast PLL Usage When Driving DPA Channels

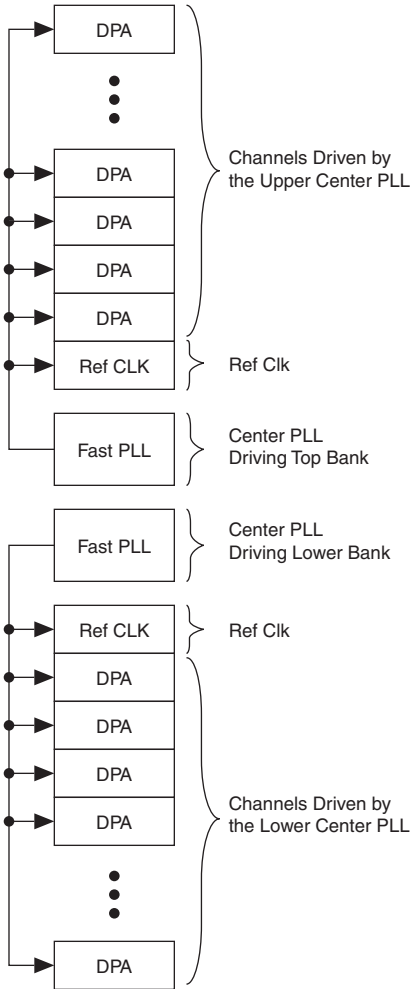

Non-DPA Differential I/O Usage Guidelines

When a differential channel or channels of left or right banks are used in non-DPA mode, you must adhere to the guidelines in the following sections.

Fast PLL/Differential I/O Driving Distance

- As shown in Figure 5–24, each fast PLL can drive all the channels in the entire bank.

Figure 5–24. Fast PLL Driving Capability When Driving Non-DPA Differential Channels

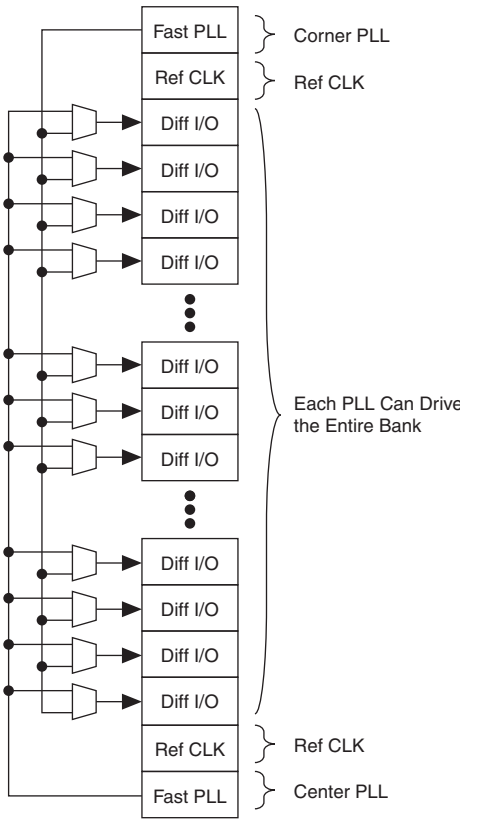

Using Corner and Center Fast PLLs

- The corner and center fast PLLs can be used as long as the channels driven by separate fast PLLs do not have their transmitter or receiver channels interleaved. Figure 5–25 shows illegal placement of differential channels when using corner and center fast PLLs.
- If one fast PLL is driving transmitter channels only, and the other fast PLL drives receiver channels only, the channels driven by those fast PLLs can overlap each other.
- Center fast PLLs can be used for both transmitter and receiver channels.

Figure 5–25. Illegal Placement of Interlaced Duplex Channels in an I/O Bank

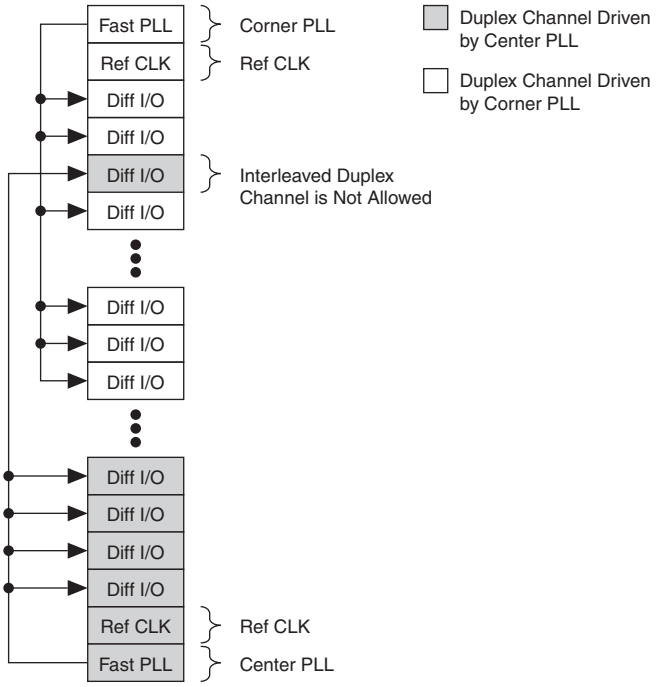

Board Design Considerations

This section explains how to achieve the optimal performance from the Stratix II and Stratix II GX high-speed I/O block and ensure first-time success in implementing a functional design with optimal signal quality.

For more information on board layout recommendations and I/O pin terminations, refer to *AN 224: High-Speed Board Layout Guidelines*.

To achieve the best performance from the device, pay attention to the impedances of traces and connectors, differential routing, and termination techniques.



Use this section together with the *Stratix II Device Family Data Sheet* in volume 1 of the *Stratix II Device Handbook*.

The Stratix II and Stratix II GX high-speed module generates signals that travel over the media at frequencies as high as one Gbps. Board designers should use the following guidelines:

- Base board designs on controlled differential impedance. Calculate and compare all parameters such as trace width, trace thickness, and the distance between two differential traces.
- Place external reference resistors as close to receiver input pins as possible.
- Use surface mount components.
- Avoid 90° or 45° corners.
- Use high-performance connectors such as HMZD or VHDM connectors for backplane designs. Two suppliers of high-performance connectors are Teradyne Corp (**www.teradyne.com**) and Tyco International Ltd. (**www.tyco.com**).
- Design backplane and card traces so that trace impedance matches the connector's or the termination's impedance.
- Keep an equal number of vias for both signal traces.
- Create equal trace lengths to avoid skew between signals. Unequal trace lengths also result in misplaced crossing points and system margins when the TCCS value increases.
- Limit vias, because they cause impedance discontinuities.
- Use the common bypass capacitor values such as 0.001, 0.01, and 0.1 µF to decouple the fast PLL power and ground planes. You can also use 0.0047 µF and 0.047 µF.
- Keep switching TTL signals away from differential signals to avoid possible noise coupling.
- Do not route TTL clock signals to areas under or above the differential signals.
- Route signals on adjacent layers orthogonally to each other.

Conclusion

Stratix II and Stratix II GX high-speed differential inputs and outputs, with their DPA and data realignment circuitry, allow users to build a robust multi-Gigabit system. The DPA circuitry allows users to compensate for any timing skews resulting from physical layouts. The data realignment circuitry allows the devices to align the data packet between the transmitter and receiver. Together with the on-chip differential termination, Stratix II and Stratix II GX devices can be used as a single-chip solution for high-speed applications.

Referenced Documents

This chapter references the following documents:

- *AN 224: High-Speed Board Layout Guidelines*
- *DC & Switching Characteristics* chapter in volume 1 of the *Stratix II Device Handbook*
- *DC & Switching Characteristics* chapter in volume 1 of the *Stratix II GX Device Handbook*
- *PLLs in Stratix II & Stratix II GX Devices* chapter in volume 2 of the *Stratix II Handbook*
- *PLLs in Stratix II & Stratix II GX Devices* chapter in volume 2 of the *Stratix II GX Handbook*
- *Selectable I/O standards in Stratix II & Stratix II GX Devices* chapter in volume 2 of the *Stratix II Device Handbook*
- *Stratix II Device Family Data Sheet* in volume 1 of the *Stratix II Device Handbook*

Document Revision History

Table 5–5 shows the revision history for this chapter.

Table 5–5. Document Revision History (Part 1 of 2)

Date and Document Version	Changes Made	Summary of Changes
January 2008, v2.2	Updated Figure 5–2.	—
	Added "Referenced Documents" section.	—
	Minor text edits.	—
	Added Figure 5–9.	—
	Updated "Receiver Data Realignment Circuit".	—
	For the *Stratix II GX Device Handbook* only: Formerly chapter 10. The chapter number changed due to the addition of the *Stratix II GX Dynamic Reconfiguration* chapter.	—
May 2007, v2.1	Updated entire chapter to include Stratix II GX information.	—
	Changed chapter part number.	—
	Fixed two types in "High-Speed Differential I/Os and Single-Ended I/Os" section	—

Table 5–5. Document Revision History (Part 2 of 2)

Date and Document Version	Changes Made	Summary of Changes
February 2007 v2.0	This chapter changed from High-Speed, Source-Synchronous Differential I/O Interfaces in Stratix II GX Devices to "High-Speed Differential I/O Interfaces with DPA in Stratix II and Stratix II GX Devices".	—
	Added the "Document Revision History" section to this chapter.	—
	Added "and Stratix II GX" after each instance of "Stratix II".	—
	Updated Figures 10–4, 10–20, 10–22.	—
	Updated Note (4) of Figure 10–2.	—
	Updated Table 10–1.	—
	Updated the following sections: • "I/O Banks" • "Differential I/O Termination" • "Fast PLL " • "Differential I/O Bit Position" • "DPA Usage Guidelines" • "Fast PLL/DPA Channel Driving Distance"	—
	Updated Note (1) of Tables 10–2 and 10–3.	—
	Added Note (5) to Figure 10–11.	—
	Added Table 10–3.	—
	Added Figures 10–14, 10–15, 10–19.	—
	Deleted old section called High-Speed Differential I/Os and Single-Ended I/Os and added a new "High-Speed Differential I/Os and Single-Ended I/Os" section.	—
	Deleted DPA and Single-Ended I/Os section.	—
	Updated title and added Note (1) to Figure 10–12.	—
	Added Note (1) to Figure 10–13.	—
April 2006, v1.2	• Updated all the MegaWizard Plug-In Manager figures to match the Quartus II software GUI. • Updated "Dedicated Source-Synchronous Circuitry" section, including Table 10–3.	—
February 2006, v1.1	• Updated chapter number from 9 to 10. • Updated Figures 10–11 and 10–12.	—
October 2005 v1.0	Added chapter to the *Stratix II GX Device Handbook*.	—

Section IV. Digital Signal Processing (DSP)

This section provides information for design and optimization of digital signal processing (DSP) functions and arithmetic operations in the on-chip DSP blocks.

This section contains the following chapter:

- Chapter 6, DSP Blocks in Stratix II and Stratix II GX Devices

Revision History

Refer to each chapter for its own specific revision history. For information on when each chapter was updated, refer to the Chapter Revision Dates section, which appears in the full handbook.

6. DSP Blocks in Stratix II and Stratix II GX Devices

SII52006-2.2

Introduction

Stratix® II and Stratix II GX devices have dedicated digital signal processing (DSP) blocks optimized for DSP applications requiring high data throughput. These DSP blocks combined with the flexibility of programmable logic devices (PLDs), provide you with the ability to implement various high performance DSP functions easily. Complex systems such as CDMA2000, voice over Internet protocol (VoIP), high-definition television (HDTV) require high performance DSP blocks to process data. These system designs typically use DSP blocks as finite impulse response (FIR) filters, complex FIR filters, fast Fourier transform (FFT) functions, discrete cosine transform (DCT) functions, and correlators.

Stratix II and Stratix II GX DSP blocks consist of a combination of dedicated blocks that perform multiplication, addition, subtraction, accumulation, and summation operations. You can configure these blocks to implement arithmetic functions like multipliers, multiply-adders and multiply-accumulators which are necessary for most DSP functions.

Along with the DSP blocks, the TriMatrix™ memory structures in Stratix II and Stratix II GX devices also support various soft multiplier implementations. The combination of soft multipliers and dedicated DSP blocks increases the number of multipliers available in Stratix II and Stratix II GX devices and provides you with a wide variety of implementation options and flexibility when designing your systems.



See the *Stratix II Device Family Data Sheet* in volume 1 of the *Stratix II Device Handbook* or the *Stratix II GX Device Family Data Sheet* in volume 1 of the *Stratix II GX Device Handbook* for more information on Stratix II and Stratix II GX devices, respectively.

DSP Block Overview

Each Stratix II and Stratix II GX device has two to four columns of DSP blocks that efficiently implement multiplication, multiply-accumulate (MAC) and multiply-add functions. Figure 6–1 shows the arrangement of one of the DSP block columns with the surrounding LABs. Each DSP block can be configured to support:

- Eight 9 × 9-bit multipliers
- Four 18 × 18-bit multipliers
- One 36 × 36-bit multiplier

Figure 6–1. DSP Blocks Arranged in Columns with Adjacent LABs

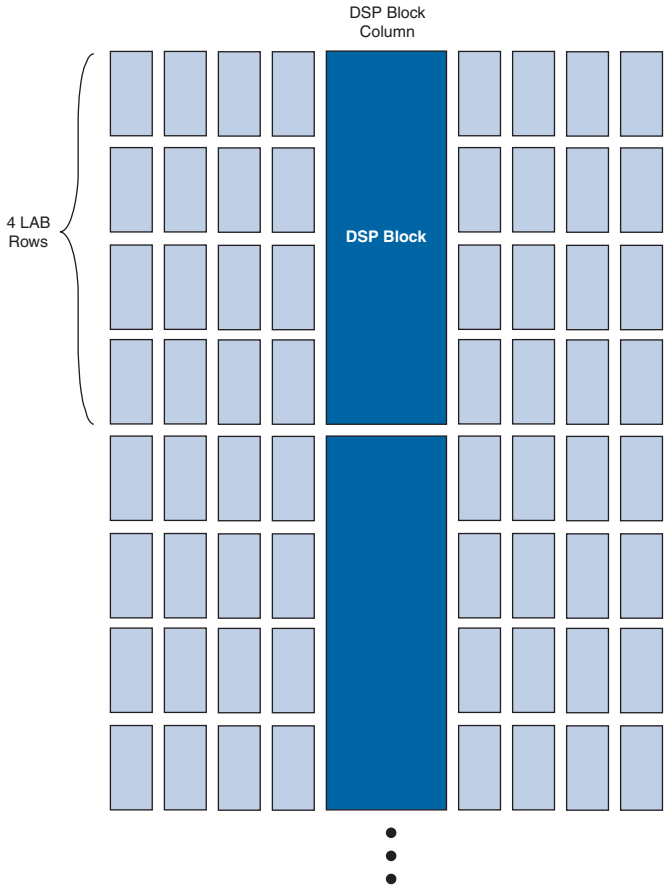

The multipliers then feed an adder or accumulator block within the DSP block. Stratix II and Stratix II GX device multipliers support rounding and saturation on Q1.15 input formats. The DSP block also has input registers that can be configured to operate in a shift register chain for efficient implementation of functions like FIR filters. The accumulator within the DSP block can be initialized to any value and supports rounding and saturation on Q1.15 input formats to the multiplier. A single DSP block can be broken down to operate different configuration modes simultaneously.

For more information on Q1.15 formatting, see "Saturation and Rounding" on page 6–13.

The number of DSP blocks per column and the number of columns available increases with device density. Table 6–1 shows the number of DSP blocks in each Stratix II device and the multipliers that you can implement.

Table 6–1. Number of DSP Blocks in Stratix II Devices *Note (1)*

Device	DSP Blocks	9 × 9 Multipliers	18 × 18 Multipliers	36 × 36 Multipliers
EP2S15	12	96	48	12
EP2S30	16	128	64	16
EP2S60	36	288	144	36
EP2S90	48	384	192	48
EP2S130	63	504	252	63
EP2S180	96	768	384	96

Note to Table 6–1:

(1) Each device has either the number of 9 × 9-, 18 × 18-, or 36 × 36-bit multipliers shown. The total number of multipliers for each device is not the sum of all the multipliers.

Table 6–2 shows the number of DSP blocks in each Stratix II GX device and the multipliers that you can implement.

Table 6–2. Number of DSP Blocks in Stratix II GX Devices *Note (1)*

Device	DSP Blocks	9 × 9 Multipliers	18 × 18 Multipliers	36 × 36 Multipliers
EP2SGX30C EP2SGX30D	16	128	64	16
EP2SGX60C EP2SGX60D EP2SGX60E	36	288	144	36
EP2SGX90E EP2SGX90F	48	384	192	48
EP2SGX130G	63	504	252	63

Note to Table 6–2:

(1) Each device has either the number of 9 × 9-, 18 × 18-, or 36 × 36-bit multipliers shown. The total number of multipliers for each device is not the sum of all the multipliers.

In addition to the DSP block multipliers, you can use the Stratix II or Stratix II GX device's TriMatrix memory blocks for soft multipliers. The availability of soft multipliers increases the number of multipliers available within the device. Table 6–3 shows the total number of multipliers available in Stratix II devices using DSP blocks and soft multipliers.

Table 6–3. Number of Multipliers in Stratix II Devices

Device	DSP Blocks (18 × 18)	Soft Multipliers (16 × 16) *(1)*, *(2)*	Total Multipliers *(3)*, *(4)*
EP2S15	48	100	148 (3.08)
EP2S30	64	189	253 (3.95)
EP2S60	144	325	469 (3.26)
EP2S90	192	509	701 (3.65)
EP2S130	252	750	1,002 (3.98)
EP2S130	384	962	1,346 (3.51)

Notes to Table 6–3:

(1) Soft multipliers implemented in sum of multiplication mode. RAM blocks are configured with 18-bit data widths and sum of coefficients up to 18-bits.

(2) Soft multipliers are only implemented in M4K and M512 TriMatrix memory blocks, not M-RAM blocks.

(3) The number in parentheses represents the increase factor, which is the total number of multipliers with soft multipliers divided by the number of 18 × 18 multipliers supported by DSP blocks only.

(4) The total number of multipliers may vary according to the multiplier mode used.

Table 6–4 shows the total number of multipliers available in Stratix II GX devices using DSP blocks and soft multipliers.

Table 6–4. Number of Multipliers in Stratix II GX Devices

Device	DSP Blocks (18 × 18)	Soft Multipliers (16 × 16) *(1)*, *(2)*	Total Multipliers *(3)*, *(4)*
EP2SGX30C EP2SGX30D	64	189	253 (3.95)
EP2SGX60C EP2SGX60D EP2SGX60E	144	325	469 (3.26)
EP2SGX90E EP2SGX90F	192	509	701 (3.65)
EP2SGX130G	252	750	1,002 (3.98)

Notes to Table 6–4:

(1) Soft multipliers implemented in sum of multiplication mode. RAM blocks are configured with 18-bit data widths and sum of coefficients up to 18-bits.

(2) Soft multipliers are only implemented in M4K and M512 TriMatrix memory blocks, not M-RAM blocks.

(3) The number in parentheses represents the increase factor, which is the total number of multipliers with soft multipliers divided by the number of 18 × 18 multipliers supported by DSP blocks only.

(4) The total number of multipliers may vary according to the multiplier mode used.

Refer to the *Stratix II Architecture* chapter in volume 1 of the *Stratix II Device Handbook* or the *Stratix II GX Architecture* chapter in volume 1 of the *Stratix II GX Device Handbook* for more information on Stratix II or Stratix II GX TriMatrix memory blocks. Refer to *AN 306: Implementing Multipliers in FPGA Devices* for more information on soft multipliers.

Figure 6–2 shows the DSP block configured for 18 × 18 multiplier mode. Figure 6–3 shows the 9 × 9 multiplier configuration of the DSP block.

Figure 6–2. DSP Block in 18 × 18 Mode

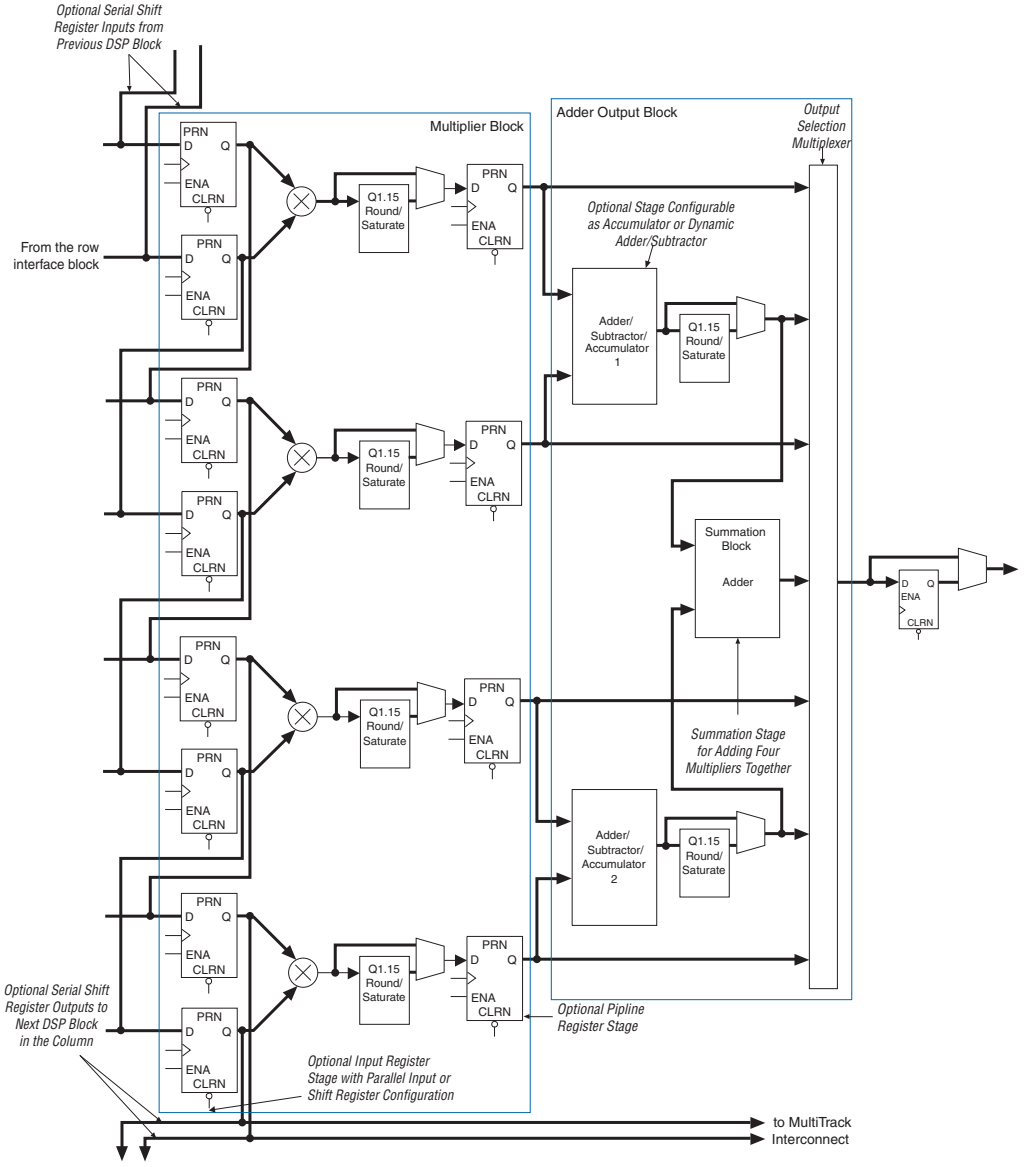

Figure 6–3. DSP Block in 9 × 9 Mode

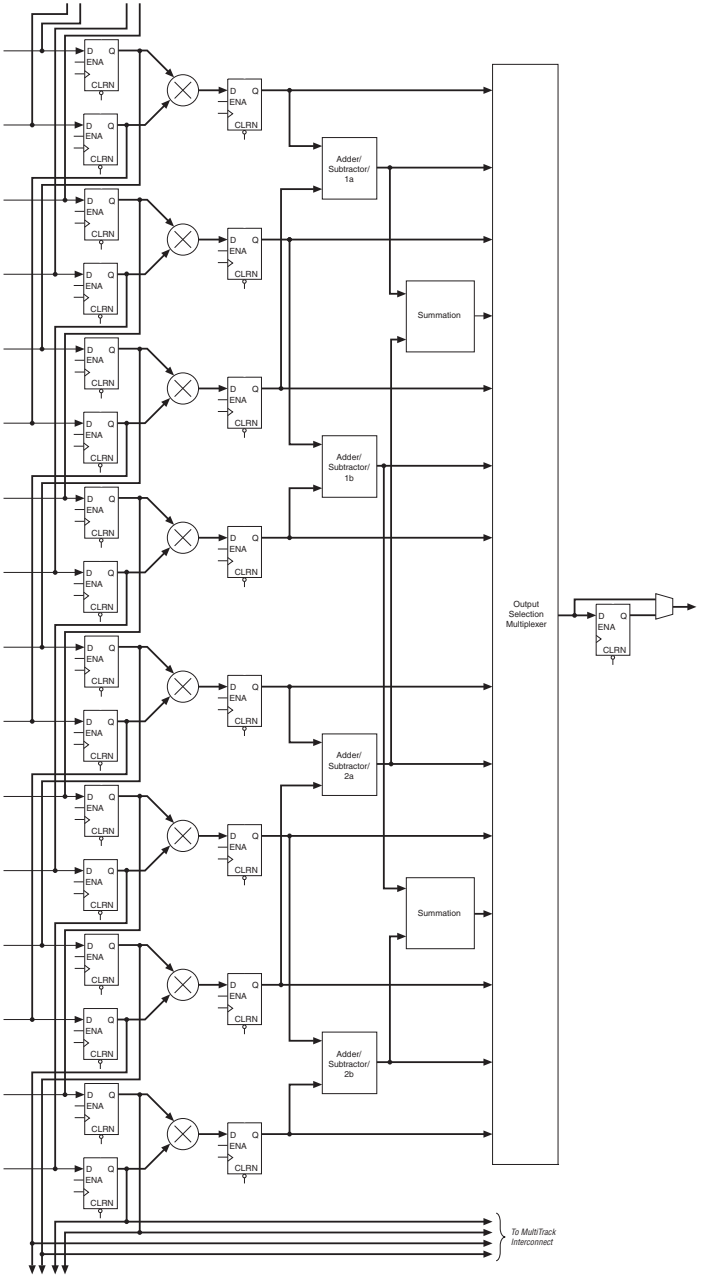

Architecture

The DSP block consists of the following elements:

- A multiplier block
- An adder/subtractor/accumulator block
- A summation block
- Input and output interfaces
- Input and output registers

Multiplier Block

Each multiplier block has the following elements:

- Input registers
- A multiplier block
- A rounding and/or saturation stage for Q1.15 input formats
- A pipeline output register

Figure 6–4 shows the multiplier block architecture.

Figure 6–4. Multiplier Block Architecture

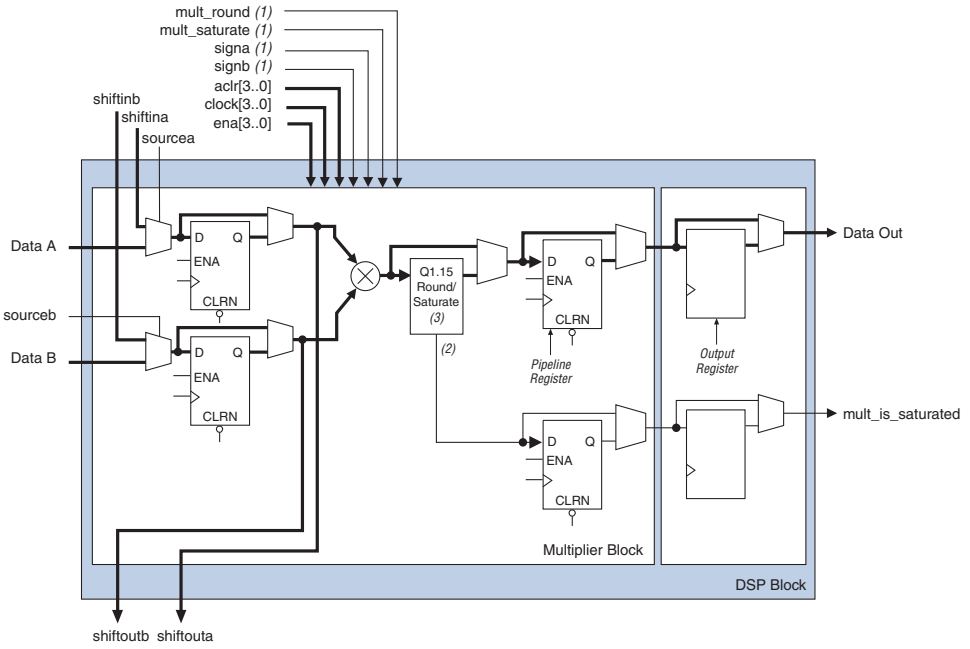

Notes to Figure 6–4:

(1) These signals are not registered or registered once to match the data path pipeline.

(2) You can send these signals through either one or two pipeline registers.

(3) The rounding and/or saturation is only supported in 18 × 18-bit signed multiplication for Q1.15 inputs.

Input Registers

Each multiplier operand can feed an input register or directly to the multiplier. The following DSP block signals control each input register within the DSP block:

- `clock[3..0]`
- `ena[3..0]`
- `aclr[3..0]`

The input registers feed the multiplier and drive two dedicated shift output lines, `shiftouta` and `shiftoutb`. The dedicated shift outputs from one multiplier block directly feed input registers of the adjacent multiplier below it within the same DSP block or the first multiplier in the next DSP block to form a shift register chain, as shown in Figure 6–5. The

dedicated shift register chain spans a single column but longer shift register chains requiring multiple columns can be implemented using regular FPGA routing resources. Therefore, this shift register chain can be of any length up to 768 registers in the largest member of the Stratix II or Stratix II GX device family.

Shift registers are useful in DSP functions like FIR filters. When implementing 9 × 9 and 18 × 18 multipliers, you do not need external logic to create the shift register chain because the input shift registers are internal to the DSP block. This implementation significantly reduces the LE resources required, avoids routing congestion, and results in predictable timing.

Stratix II and Stratix II GX DSP blocks allow you to dynamically select whether a particular multiplier operand is fed by regular data input or the dedicated shift register input using the `sourcea` and `sourceb` signals. A logic 1 value on the `sourcea` signal indicates that data A is fed by the dedicated scan-chain; a logic 0 value indicates that it is fed by regular data input. This feature allows the implementation of a dynamically loadable shift register where the shift register operates normally using the scan-chains and can also be loaded dynamically in parallel using the data input value.

Figure 6–5. Shift Register Chain *Note (1)*

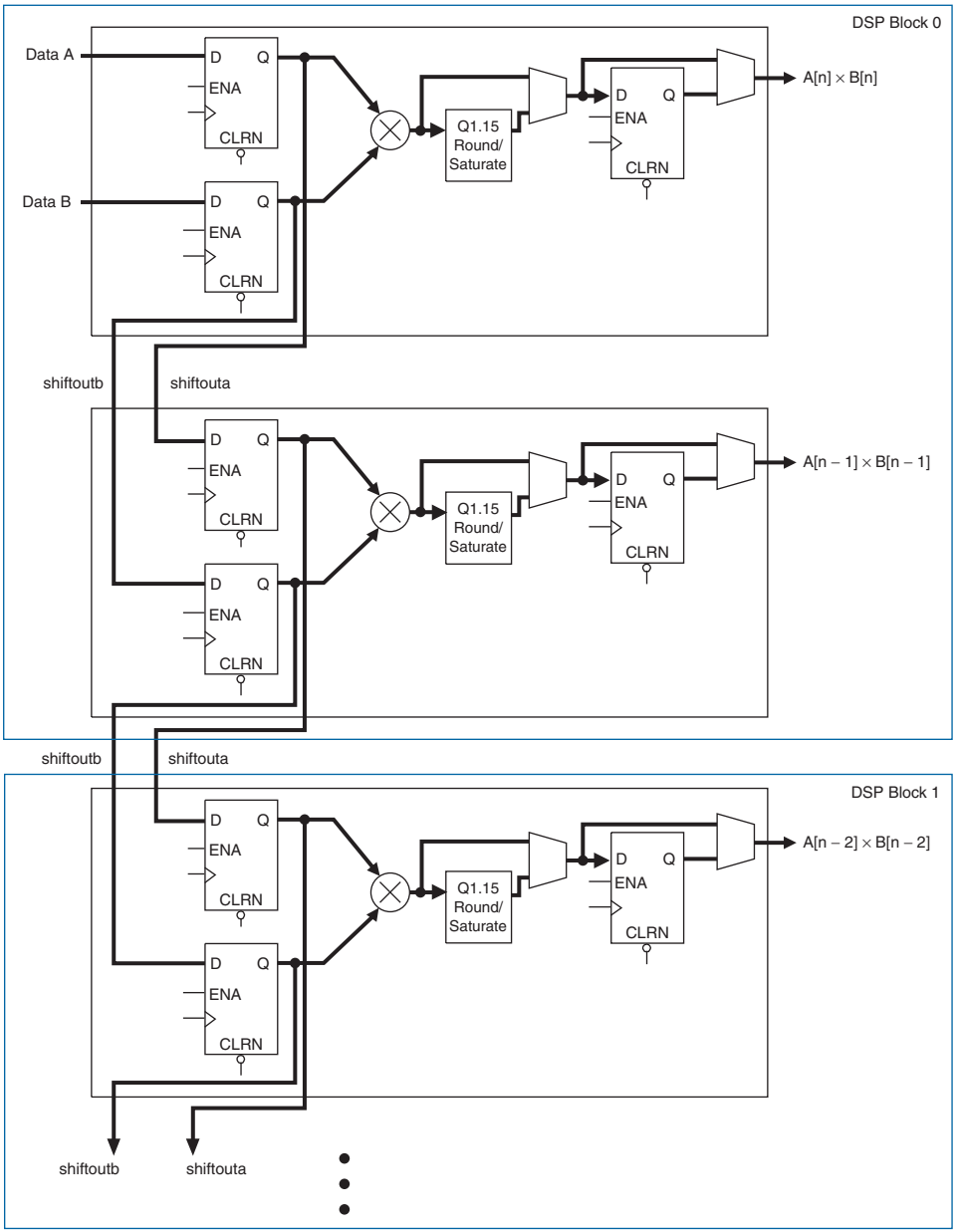

Note to Figure 6–5:

(1) Either Data A or Data B input can be set to a parallel input for constant coefficient multiplication.

Table 6–5 shows the summary of input register modes for the DSP block.

Table 6–5. Input Register Modes

Register Input Mode	9 × 9	18 × 18	36 × 36
Parallel input	✓	✓	✓
Shift register input	✓	✓	

Multiplier Stage

The multiplier stage supports 9 × 9, 18 × 18, or 36 × 36 multipliers as well as other smaller multipliers in between these configurations. See "Operational Modes" on page 6–21 for details. Depending on the data width of the multiplier, a single DSP block can perform many multiplications in parallel.

Each multiplier operand can be a unique signed or unsigned number. Two signals, `signa` and `signb`, control the representation of each operand respectively. A logic 1 value on the `signa` signal indicates that data A is a signed number while a logic 0 value indicates an unsigned number. Table 6–6 shows the sign of the multiplication result for the various operand sign representations. The result of the multiplication is signed if any one of the operands is a signed value.

Table 6–6. Multiplier Sign Representation

Data A (signa Value)	Data B (signb Value)	Result
Unsigned (logic 0)	Unsigned (logic 0)	Unsigned
Unsigned (logic 0)	Signed (logic 1)	Signed
Signed (logic 1)	Unsigned (logic 0)	Signed
Signed (logic 1)	Signed (logic 1)	Signed

There is only one `signa` and one `signb` signal for each DSP block. Therefore, all of the data A inputs feeding the same DSP block must have the same sign representation. Similarly, all of the data B inputs feeding the same DSP block must have the same sign representation. The multiplier offers full precision regardless of the sign representation.



When the `signa` and `signb` signals are unused, the Quartus® II software sets the multiplier to perform unsigned multiplication by default.

Saturation and Rounding

The DSP blocks have hardware support to perform optional saturation and rounding after each 18 × 18 multiplier for Q1.15 input formats.



Designs must use 18 × 18 multipliers for the saturation and rounding options because the Q1.15 input format requires 16-bit input widths.



Q1.15 input format multiplication requires signed multipliers. The most significant bit (MSB) in the Q1.15 input format represents the value's sign bit. Use signed multipliers to ensure the proper sign extension during multiplication.

The Q1.15 format uses 16 bits to represent each fixed point input. The MSB is the sign bit, and the remaining 15-bits are used to represent the value after the decimal place (or the fractional value). This Q1.15 value is equivalent to an integer number representation of the 16-bits divided by 2^{15}, as shown in the following equations.

$$-\frac{1}{2} = 1\ 100\ 0000\ 0000\ 0000 = -\frac{0x4000}{2^{15}}$$

$$\frac{1}{8} = 0\ 001\ 0000\ 0000\ 0000 = \frac{0x1000}{2^{15}}$$

All Q1.15 numbers are between –1 and 1.

When performing multiplication, even though the Q1.15 input only uses 16 of the 18 multiplier inputs, the entire 18-bit input bus is transmitted to the multiplier. This is like a 1.17 input, where the two least significant bits (LSBs) are always 0.

The multiplier output will be a 2.34 value (36 bits total) before performing any rounding or saturation. The two MSBs are sign bits. Since the output only requires one sign bit, you can ignore one of the two MSBs, resulting in a Q1.34 value before rounding or saturation.

When the design performs saturation, the multiplier output gets saturated to 0x7FFFFFFF in a 1.31 format. This uses bits `[34..3]` of the overall 36-bit multiplier output. The three LSBs are set to 0.

The DSP block obtains the `mult_is_saturated` or `accum_is_saturated` overflow signal value from the LSB of the multiplier or accumulator output. Therefore, whenever saturation occurs, the LSB of the multiplier or accumulator output will send a `1` to the

mult_is_saturated or accum_is_saturated overflow signal. At all other times, this overflow signal is 0 when saturation is enabled or reflects the value of the LSB of the multiplier or accumulator output.

When the design performs rounding, it adds 0x00008000 in 1.31 format to the multiplier output, and it only uses bits [34..15] of the overall 36-bit multiplier output. Adding 0x00008000 in 1.31 format to the 36-bit multiplier result is equivalent to adding 0x0 0004 0000 in 2.34 format. The 16 LSBs are set to 0. Figure 6–6 shows which bits are used when the design performs rounding and saturation for the multiplication.

Figure 6–6. Rounding and Saturation Bits

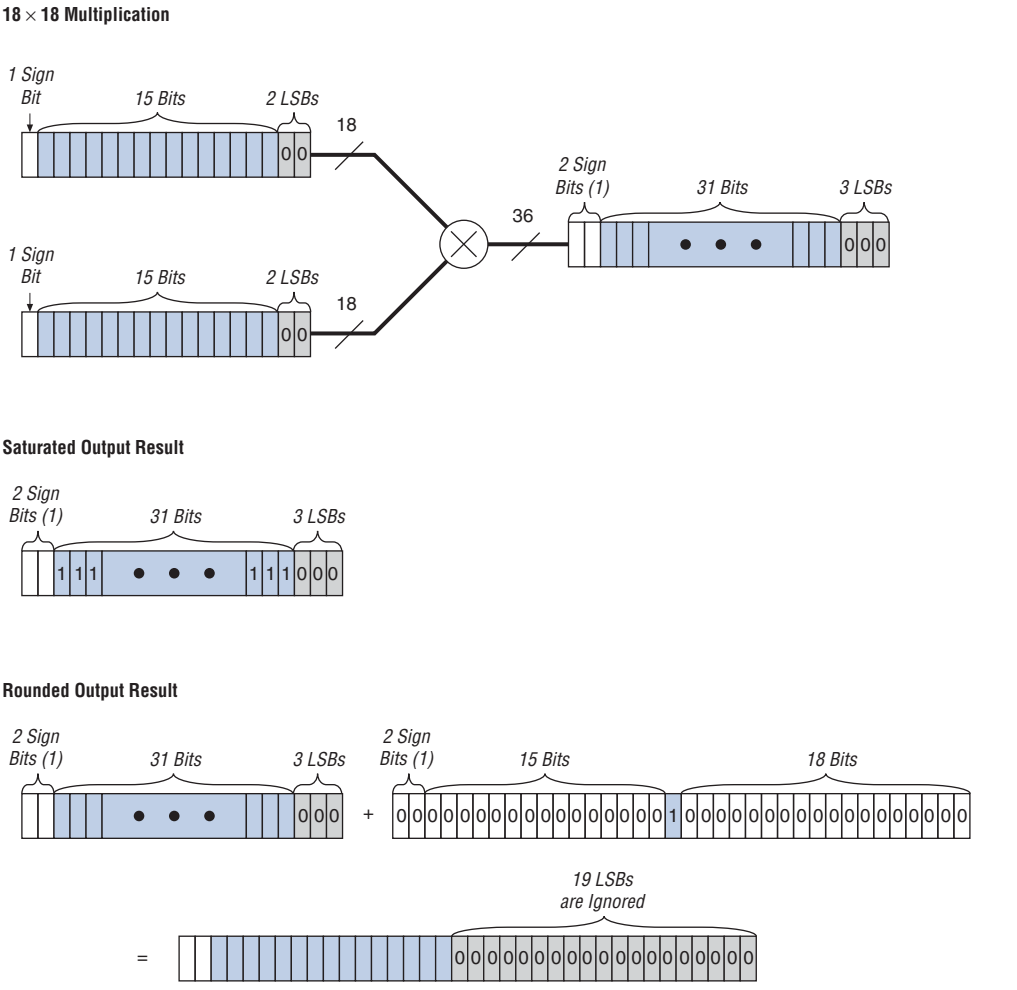

Note to Figure 6–6:

(1) Both sign bits are the same. The design only uses one sign bit, and the other one is ignored.

If the design performs a `multiply_accumulate` or `multiply_add` operation, the multiplier output is input to the adder/subtractor/accumulator blocks as a 2.31 value, and the three LSBs are 0.

Pipeline Registers

The output from the multiplier can feed a pipeline register or this register can be bypassed. Pipeline registers may be implemented for any multiplier size and increase the DSP block's maximum performance, especially when using the subsequent DSP block adder stages. Pipeline registers split up the long signal path between the adder/subtractor/accumulator block and the adder/output block, creating two shorter paths.

Adder/Output Block

The adder/output block has the following elements:

- An adder/subtractor/accumulator block
- A summation block
- An output select multiplexer
- Output registers

Figure 6–7 shows the adder/output block architecture.

The adder/output block can be configured as:

- An output interface
- An accumulator which can be optionally loaded
- A one-level adder
- A two-level adder with dynamic addition/subtraction control on the first-level adder
- The final stage of a 36-bit multiplier, 9 × 9 complex multiplier, or 18 × 18 complex multiplier

The output select multiplexer sets the output configuration of the DSP block. The output registers can be used to register the output of the adder/output block.



The adder/output block cannot be used independently from the multiplier.

Figure 6–7. Adder/Output Block Architecture *Note (1)*

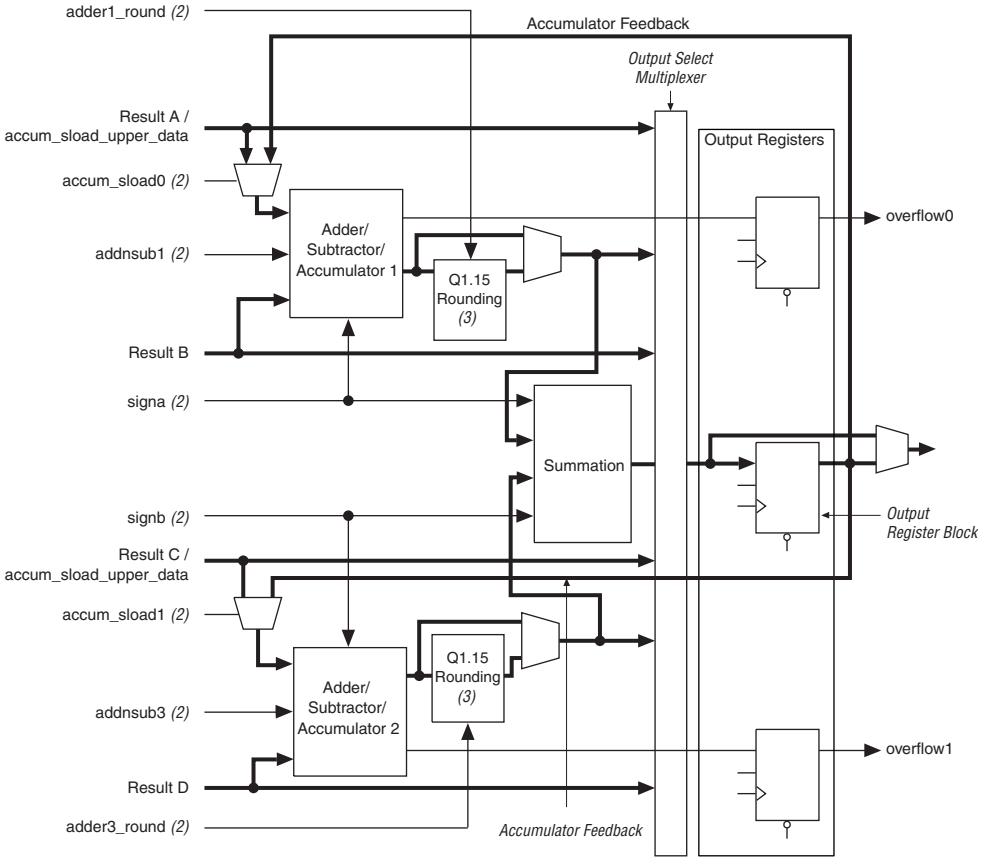

Notes to Figure 6–7:

(1) The adder/output block is in 18 × 18 mode. In 9 × 9 mode, there are four adder/subtractor blocks and two summation blocks.

(2) You can send these signals through a pipeline register. The pipeline length can be set to 1 or 2.

(3) Q1.15 inputs are not available in 9 × 9 or 36 × 36 modes.

Adder/Subtractor/Accumulator Block

The adder/subtractor/accumulator block is the first level adder stage of the adder/output block. This block can be configured as an accumulator or as an adder/subtractor.

Accumulator

When the adder/subtractor/accumulator is configured as an accumulator, the output of the adder/output block feeds back to the accumulator as shown in Figure 6–7. The accumulator can be set up to perform addition only, subtraction only or the `addnsub` signal can be used to dynamically control the accumulation direction. A logic 1 value on the `addnsub` signal indicates that the accumulator is performing addition while a logic 0 value indicates subtraction.

Each accumulator can be cleared by either clearing the DSP block output register or by using the `accum_sload` signal. The accumulator clear using the `accum_sload` signal is independent from the resetting of the output registers so the accumulation can be cleared and a new one can begin without losing any clock cycles. The `accum_sload` signal controls a feedback multiplexer that specifies that the output of the multiplier should be summed with a zero instead of the accumulator feedback path.

The accumulator can also be initialized/preloaded with a non-zero value using the `accum_sload` signal and the `accum_sload_upper_data` bus with one clock cycle latency. Preloading the accumulator is done by adding the result of the multiplier with the value specified on the `accum_sload_upper_data` bus. As in the case of the accumulator clearing, the `accum_sload` signal specifies to the feedback multiplexer that the `accum_sload_upper_data` signal should feed the accumulator instead of the accumulator feedback signal. The `accum_sload_upper_data` signal only loads the upper 36-bits of the accumulator. To load the entire accumulator, the value for the lower 16-bits must be sent through the multiplier feeding that accumulator with the multiplier set to perform a multiplication by one.

The overflow signal will go high on the positive edge of the clock when the accumulator detects an overflow or underflow. The overflow signal will stay high for only one clock cycle after an overflow or underflow is detected even if the overflow or underflow condition is still present. A latch external to the DSP block has to be used to preserve the overflow signal indefinitely or until the latch is cleared.

The DSP blocks support Q1.15 input format saturation and rounding in each accumulator. The following signals are available that can control if saturation or rounding or both is performed to the output of the accumulator:

- `accum_round`
- `accum_saturation`
- `accum_is_saturated` output

Each DSP block has two sets of accum_round and accum_saturation signals which control if rounding or saturation is performed on the accumulator output respectively (one set of signals for each accumulator). Rounding and saturation of the accumulator output is only available when implementing an 16 × 16 multiplier-accumulator to conform to the bit widths required for Q1.15 input format computation. A logic 1 value on the accum_round and accum_saturation signal indicates that rounding or saturation is performed while a logic 0 indicates that no rounding or saturation is performed. A logic 1 value on the accum_is_saturated output signal tells you that saturation has occurred to the result of the accumulator.

Figure 6–10 shows the DSP block configured to perform multiplier-accumulator operations.

Adder/Subtractor

The addnsub1 or addnsub3 signals specify whether you are performing addition or subtraction. A logic 1 value on the addnsub1 or addnsub3 signals indicates that the adder/subtractor is performing addition while a logic 0 value indicates subtraction. These signals can be dynamically controlled using logic external to the DSP block. If the first stage is configured as a subtractor, the output is A – B and C – D.

The adder/subtractor block share the same signa and signb signals as the multiplier block. The signa and signb signals can be pipelined with a latency of one or two clock cycles or not.

The DSP blocks support Q1.15 input format rounding (not saturation) after each adder/subtractor. The addnsub1_round and addnsub3_round signals determine if rounding is performed to the output of the adder/subtractor.

The addnsub1_round signal controls the rounding of the top adder/subtractor and the addnsub3_round signal controls the rounding of the bottom adder/subtractor. Rounding of the adder output is only available when implementing an 16 × 16 multiplier-adder to conform to the bit widths required for Q1.15 input format computation. A logic 1 value on the addnsub_round signal indicates that rounding is performed while a logic 0 indicates that no rounding is performed.

Summation Block

The output of the adder/subtractor block feeds an optional summation block, which is an adder block that sums the outputs of both adder/subtractor blocks. The summation block is used when more than two multiplier results are summed. This is useful in applications such as FIR filtering.

Output Select Multiplexer

The outputs of the different elements of the adder/output block are routed through an output select multiplexer. Depending on the operational mode of the DSP block, the output multiplexer selects whether the outputs of the DSP blocks comes from the outputs of the multiplier block, the outputs of the adder/subtractor/accumulator, or the output of the summation block. The output select multiplier configuration is set automatically by software, based on the DSP block operational mode you specify.

Output Registers

You can use the output registers to register the DSP block output. The following signals can control each output register within the DSP block:

- `clock[3..0]`
- `ena[3..0]`
- `aclr[3..0]`

The output registers can be used in any DSP block operational mode.

The output registers form part of the accumulator in the multiply-accumulate mode.

Refer to the *Stratix II Architecture* chapter in volume 1 of the *Stratix II Device Handbook* or the *Stratix II GX Architecture* chapter in volume 1 of the *Stratix II GX Device Handbook* for more information on the DSP block routing and interface.

Operational Modes

The DSP block can be used in one of four basic operational modes, or a combination of two modes, depending on the application needs. Table 6–7 shows the four basic operational modes and the number of multipliers that can be implemented within a single DSP block depending on the mode.

Table 6–7. DSP Block Operational Modes

Mode	Number of Multipliers		
	9 × 9	18 × 18	36 × 36
Simple multiplier	Eight multipliers with eight product outputs	Four multipliers with four product outputs	One multiplier
Multiply accumulate	-	Two 52-bit multiply-accumulate blocks	-
Two-multiplier adder	Four two-multiplier adder (two 9 × 9 complex multiply)	Two two-multiplier adder (one 18 × 18 complex multiply)	-
Four-multiplier adder	Two four-multiplier adder	One four-multiplier adder	-

The Quartus II software includes megafunctions used to control the mode of operation of the multipliers. After you make the appropriate parameter settings using the megafunction's MegaWizard® Plug-In Manager, the Quartus II software automatically configures the DSP block.

Stratix II and Stratix II GX DSP blocks can operate in different modes simultaneously. For example, a single DSP block can be broken down to operate a 9 × 9 multiplier as well as an 18 × 18 multiplier-adder where both multiplier's input a and input b have the same sign representations. This increases DSP block resource efficiency and allows you to implement more multipliers within a Stratix II or Stratix II GX device. The Quartus II software automatically places multipliers that can share the same DSP block resources within the same block.

Additionally, you can set up each Stratix II or Stratix II GX DSP block to dynamically switch between the following three modes:

- Up to four 18-bit independent multipliers
- Up to two 18-bit multiplier-accumulators
- One 36-bit multiplier

Each half of a Stratix II or Stratix II GX DSP block has separate mode control signals, which allows you to implement multiple 18-bit multipliers or multiplier-accumulators within the same DSP block and dynamically switch them independently (if they are in separate DSP block halves). If the design requires a 36-bit multiplier, you must switch the entire DSP block to accommodate the it since the multiplier requires the entire DSP block. The smallest input bit width that supports dynamic mode switching is 18 bits.

Simple Multiplier Mode

In simple multiplier mode, the DSP block performs individual multiplication operations for general-purpose multipliers and for applications such as computing equalizer coefficient updates which require many individual multiplication operations.

9- and 18-Bit Multipliers

Each DSP block multiplier can be configured for 9- or 18-bit multiplication. A single DSP block can support up to eight individual 9 × 9 multipliers or up to four individual 18 × 18 multipliers. For operand widths up to 9-bits, a 9 × 9 multiplier will be implemented and for operand widths from 10- to 18-bits, an 18 × 18 multiplier will be implemented. Figure 6–8 shows the DSP block in the simple multiplier operation mode.

Figure 6–8. Simple Multiplier Mode

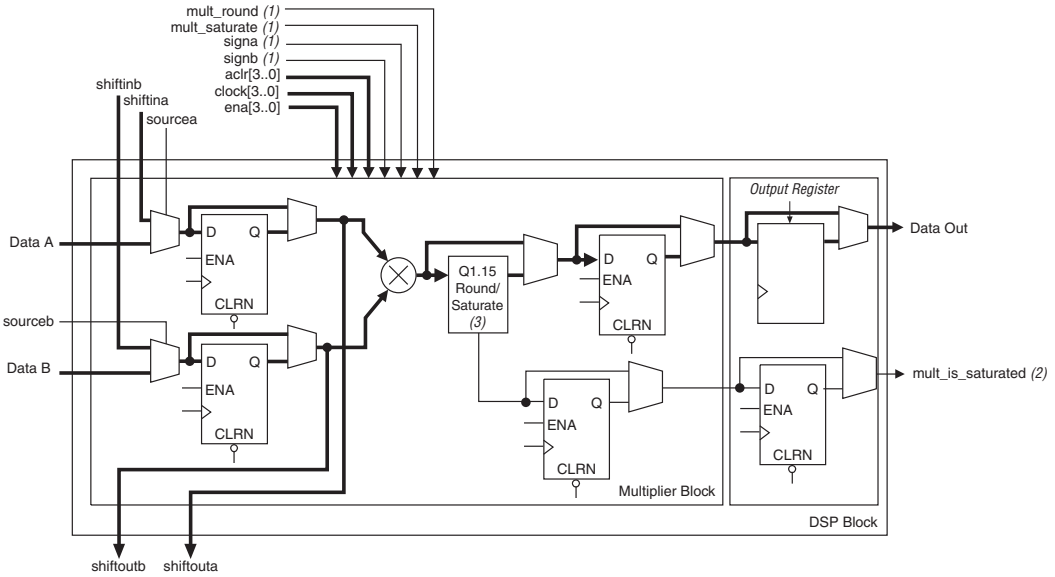

Notes to Figure 6–8:

(1) These signals are not registered or registered once to match the data path pipeline.

(2) This signal has the same latency as the data path.

(3) The rounding and saturation is only supported in 18- × 18-bit signed multiplication for Q1.15 inputs.

The multiplier operands can accept signed integers, unsigned integers or a combination of both. The `signa` and `signb` signals can be changed dynamically and can be registered in the DSP block. Additionally, the multiplier inputs and result can be registered independently. The pipeline registers within the DSP block can be used to pipeline the multiplier result, increasing the performance of the DSP block.

36-Bit Multiplier

The 36-bit multiplier is also a simple multiplier mode but uses the entire DSP block, including the adder/output block to implement the 36 × 36-bit multiplication operation. The device inputs 18-bit sections of the 36-bit input into the four 18-bit multipliers. The adder/output block adds the partial products obtained from the multipliers using the summation block. Pipeline registers can be used between the multiplier stage and the summation block to speed up the multiplication. The 36 × 36-bit multiplier supports signed, unsigned as well as mixed sign multiplication. Figure 6–9 shows the DSP block configured to implement a 36-bit multiplier.

Figure 6–9. 36-Bit Multiplier

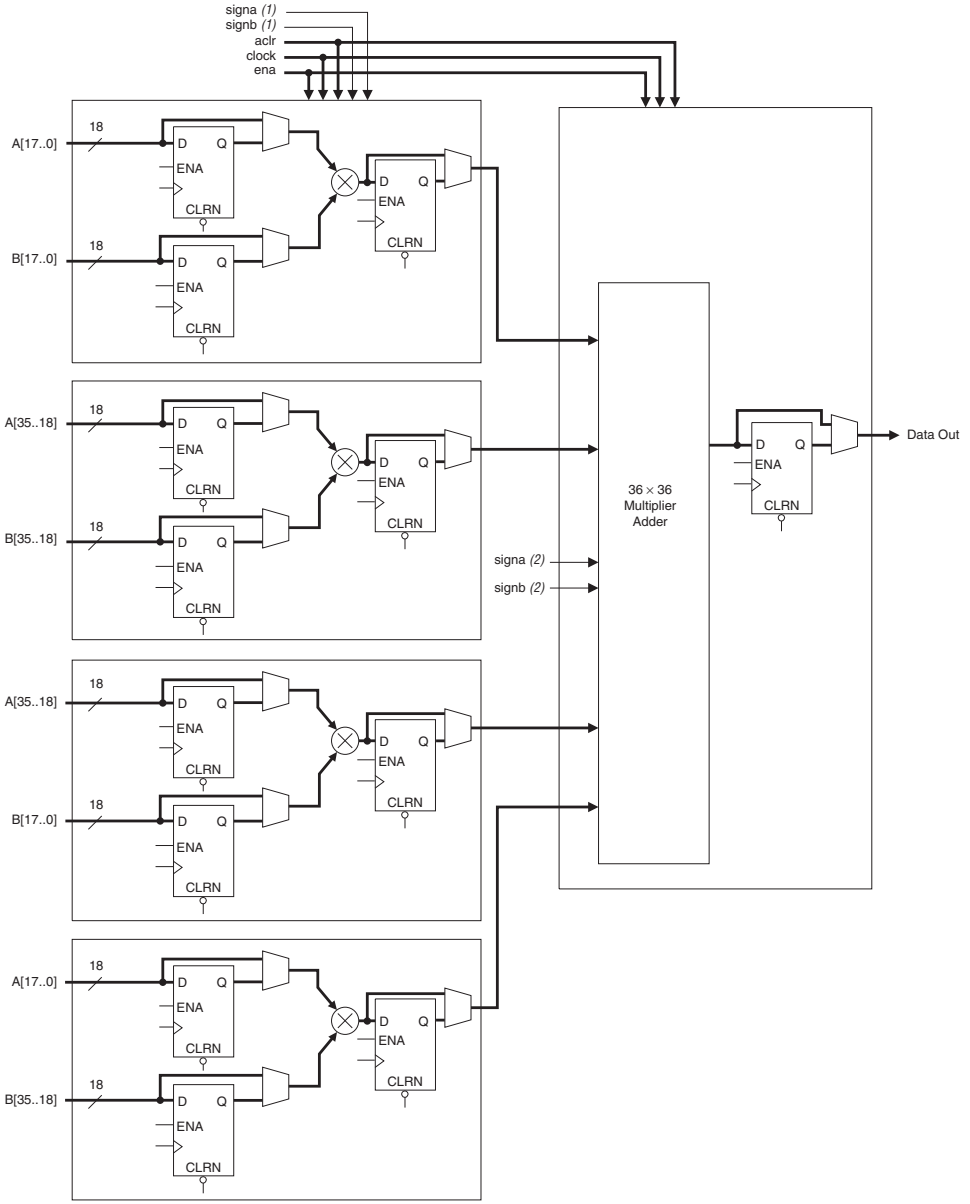

Notes to Figure 6–9:

(1) These signals are either not registered or registered once to match the pipeline.

(2) These signals are either not registered, registered once, or registered twice to match the data path pipeline.

The 36-bit multiplier is useful for applications requiring more than 18-bit precision, for example, for mantissa multiplication of precision floating-point arithmetic applications.

Multiply Accumulate Mode

In multiply accumulate mode, the output of the multiplier stage feeds the adder/output block which is configured as an accumulator or subtractor. Figure 6–10 shows the DSP block configured to operate in multiply accumulate mode.

Figure 6–10. Multiply Accumulate Mode

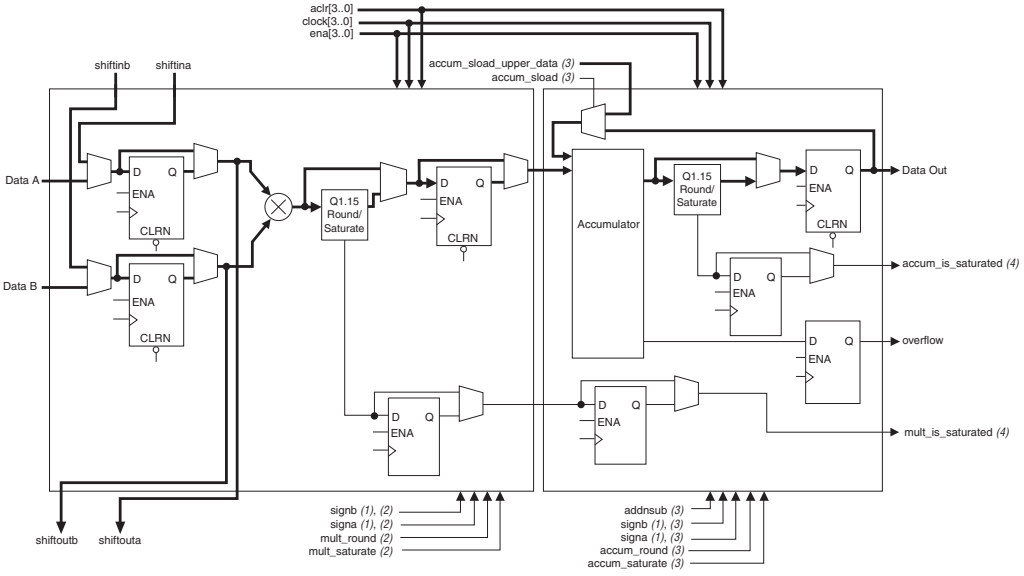

Notes to Figure 6–10:

(1) The `signa` and `signb` signals are the same in the multiplier stage and the adder/output block.
(2) These signals are not registered or registered once to match the data path pipeline.
(3) You can send these signals through either one or two pipeline registers.
(4) These signals match the latency of the data path.

A single DSP block can implement up to two independent 18-bit multiplier accumulators. The Quartus II software implements smaller multiplier accumulators by tying the unused lower-order bits of the 18-bit multiplier to ground.

The multiplier accumulator output can be up to 52-bits wide to account for a 36-bit multiplier result with 16-bits of accumulation. In this mode, the DSP block uses output registers and the `accum_sload` and overflow

signals. The accum_sload signal can be used to clear the accumulator so that a new accumulation operation can begin without losing any clock cycles. This signal can be unregistered or registered once or twice. The accum_sload signal can also be used to preload the accumulator with a value specified on the accum_sload_upper_data signal with a one clock cycle penalty. The accum_sload_upper_data signal only loads the upper 36-bits (bits [51..16] of the accumulator). To load the entire accumulator, the value for the lower 16-bits (bits [15..0]) must be sent through the multiplier feeding that accumulator with the multiplier set to perform a multiplication by one. Bits [17..16] are overlapped by both the accum_sload_upper_data signal and the multiplier output. Either one of these signals can be used to load bits [17..16].

The overflow signal indicates an overflow or underflow in the accumulator. This signal gets updated every clock cycle due to a new accumulation operation every cycle. To preserve the signal, an external latch can be used. The addnsub signal can be used to specify if an accumulation or subtraction is performed dynamically.



The DSP block can implement just an accumulator (without multiplication) by specifying a multiply by one at the multiplier stage followed by an accumulator to force the Quartus II software to implement the function within the DSP block.

Multiply Add Mode

In multiply add mode, the output of the multiplier stage feeds the adder/output block which is configured as an adder or subtractor to sum or subtract the outputs of two or more multipliers. The DSP block can be configured to implement either a two-multiply add (where the outputs of two multipliers are added/subtracted together) or a four-multiply add function (where the outputs of four multipliers are added or subtracted together).



The adder block within the DSP block can only be used if it follows multiplication operations.

Two-Multiplier Adder

In the two-multiplier adder configuration, the DSP block can implement four 9-bit or smaller multiplier adders or two 18-bit multiplier adders. The adders can be configured to take the sum of both multiplier outputs or the difference of both multiplier outputs. You have the option to vary the summation/subtraction operation dynamically. These multiply add functions are useful for applications such as FFTs and complex FIR filters. Figure 6–11 shows the DSP block configured in the two-multiplier adder mode.

Figure 6–11. Two-Multiplier Adder Mode

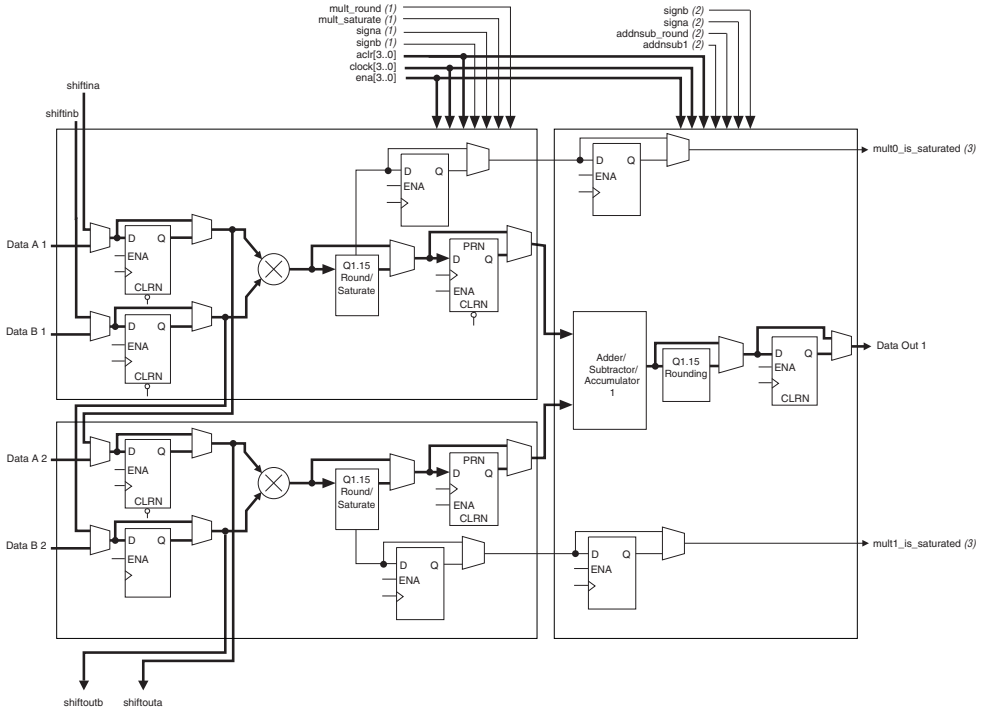

Notes to Figure 6–11:

(1) These signals are not registered or registered once to match the data path pipeline.
(2) You can send these signals through a pipeline register. The pipeline length can be set to 1 or 2.
(3) These signals match the latency of the data path.

Complex Multiply

The DSP block can be configured to implement complex multipliers using the two-multiplier adder mode. A single DSP block can implement one 18 × 18-bit complex multiplier or two 9 × 9-bit complex multipliers.

A complex multiplication can be written as:

$$(a + jb) \times (c + jd) = ((a \times c) - (b \times d)) + j\,((a \times d) + (b \times c))$$

To implement this complex multiplication within the DSP block, the real part $((a \times c) - (b \times d))$ is implemented using two multipliers feeding one subtractor block while the imaginary part $((a \times d) + (b \times c))$ is implemented using another two multipliers feeding an adder block, for data up to 18-bits. Figure 6–12 shows an 18-bit complex multiplication. For data widths up to 9-bits, a DSP block can perform two separate complex

multiplication operations using eight 9-bit multipliers feeding four adder/subtractor/accumulator blocks. Resources external to the DSP block must be used to route the correct real and imaginary input components to the appropriate multiplier inputs to perform the correct computation for the complex multiplication operation.

Figure 6–12. Complex Multiplier Using Two-Multiplier Adder Mode

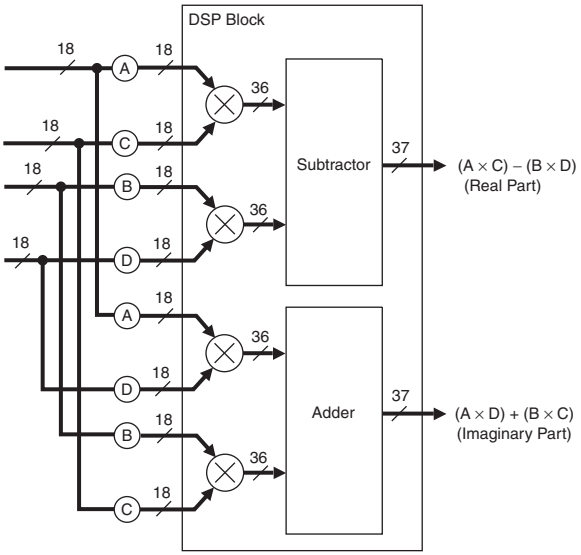

Four-Multiplier Adder

In the four-multiplier adder configuration, the DSP block can implement one 18 × 18 or two individual 9 × 9 multiplier adders. These modes are useful for implementing one-dimensional and two-dimensional filtering applications. The four-multiplier adder is performed in two addition stages. The outputs of two of the four multipliers are initially summed in the two first-stage adder/subtractor/accumulator blocks. The results of these two adder/subtractor/accumulator blocks are then summed in the final stage summation block to produce the final four-multiplier adder result. Figure 6–13 shows the DSP block configured in the four-multiplier adder mode.

Figure 6–13. Four-Multiplier Adder Mode

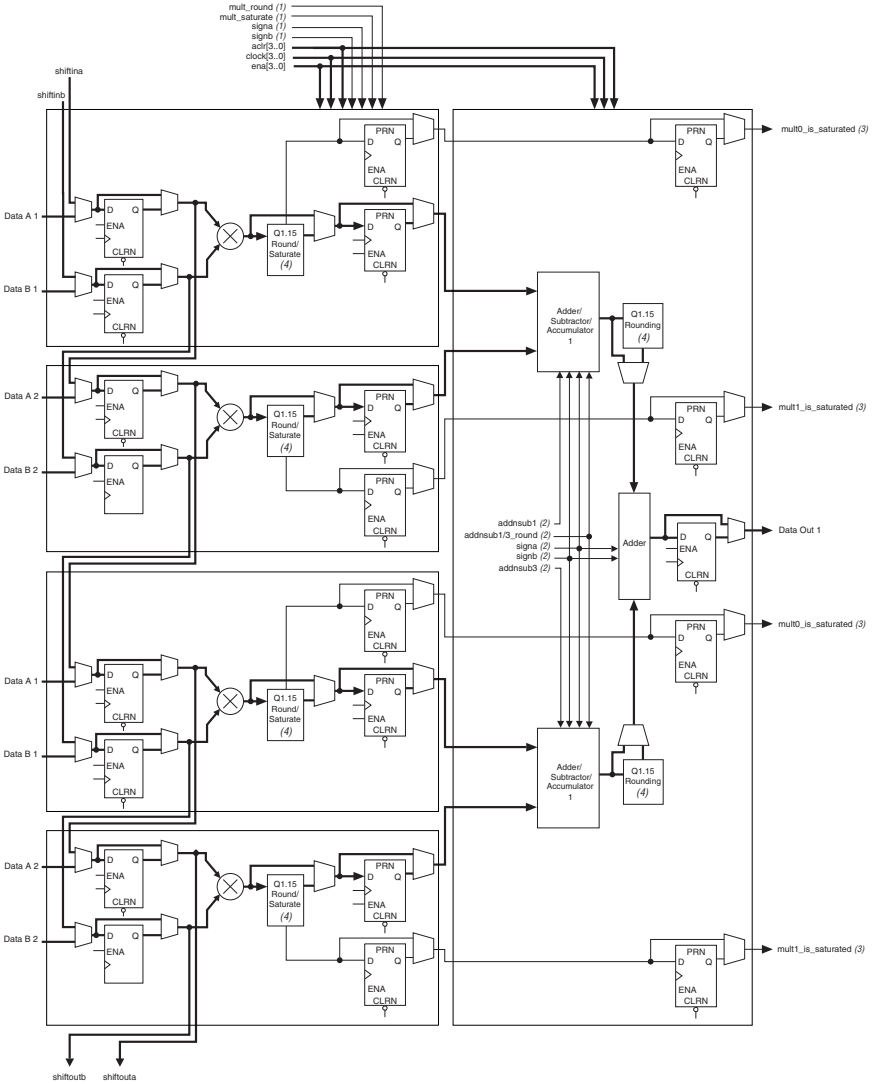

Notes to Figure 6–13:

(1) These signals are not registered or registered once to match the data path pipeline.
(2) You should send these signals through the pipeline register to match the latency of the data path.
(3) These signals match the latency of the data path.
(4) The rounding and saturation is only supported in 18- × 18-bit signed multiplication for Q1.15 inputs.

FIR Filter

The four-multiplier adder mode can be used to implement FIR filter and complex FIR filter applications. To do this, the DSP block is set up in a four-multiplier adder mode with one set of input registers configured as shift registers using the dedicated shift register chain. The set of input registers configured as shift registers will contain the input data while the inputs configured as regular inputs will hold the filter coefficients. Figure 6–14 shows the DSP block configured in the four-multiplier adder mode using input shift registers.

Figure 6–14. FIR Filter Implemented Using the Four-Multiplier Adder Mode with Input Shift Registers

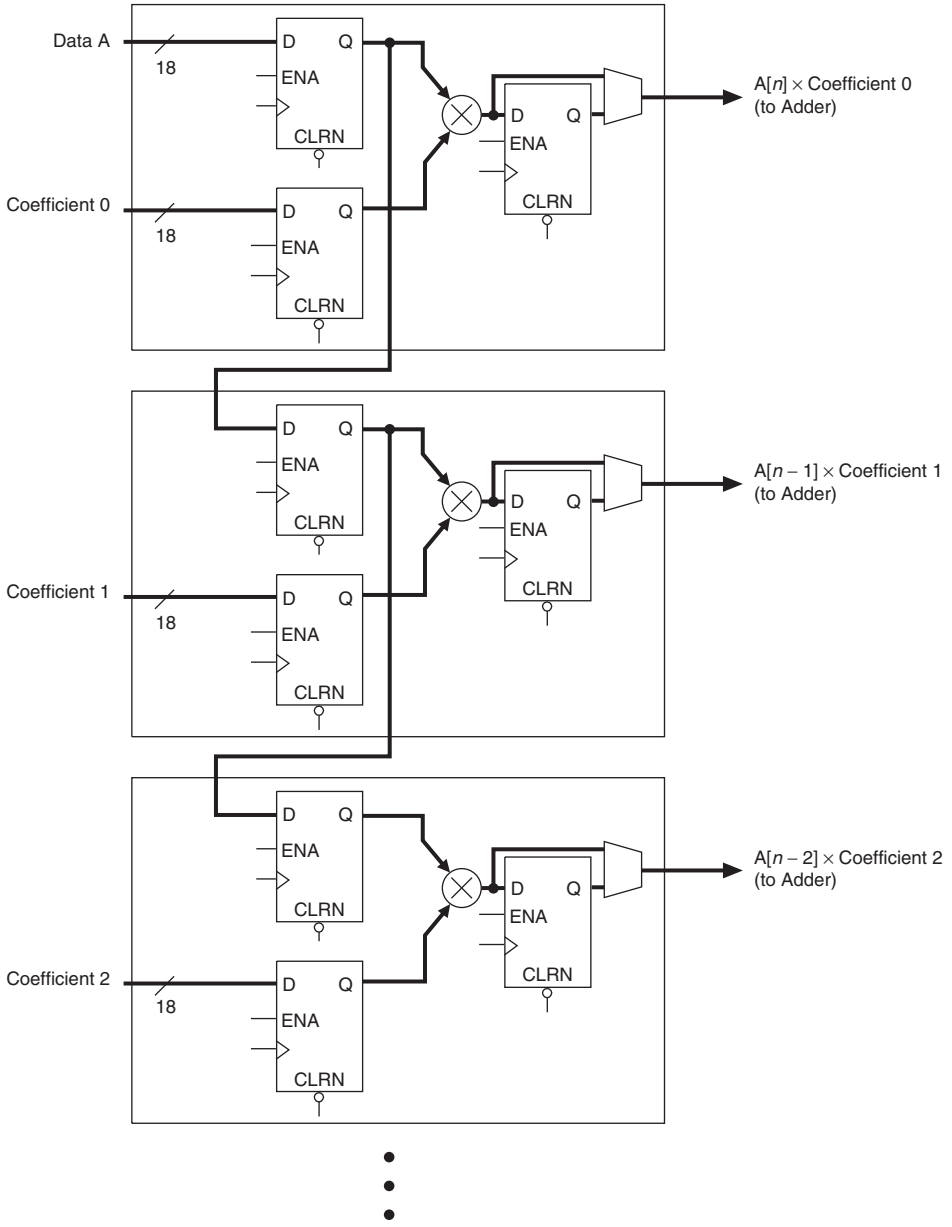

The built-in input shift register chain within the DSP block eliminates the need for shift registers externally to the DSP block in logic elements (LEs). This architecture feature simplifies the filter design and improves the filter performance because all the filter circuitry is localized within the DSP block.

Input shift registers for the 36-bit simple multiplier mode have to be implemented using external registers to the DSP block.

A single DSP block can implement a four tap 18-bit FIR filter. For filters larger than four taps, the DSP blocks can be cascaded with additional adder stages implemented using LEs.

Software Support

Altera provides two distinct methods for implementing various modes of the DSP block in your design: instantiation and inference. Both methods use the following three Quartus II megafunctions:

- `lpm_mult`
- `altmult_add`
- `altmult_accum`

You can instantiate the megafunctions in the Quartus II software to use the DSP block. Alternatively, with inference, you can create a HDL design an synthesize it using a third-party synthesis tool like LeonardoSpectrum or Synplify or Quartus II Native Synthesis that infers the appropriate megafunction by recognizing multipliers, multiplier adders, and multiplier accumulators. Using either method, the Quartus II software maps the functionality to the DSP blocks during compilation.

See Quartus II On-Line Help for instructions on using the megafunctions and the MegaWizard Plug-In Manager.

For more information, see the Synthesis section in *Design and Synthesis* (volume 1) of the *Quartus II Development Software Handbook*.

Conclusion

The Stratix II and Stratix II GX device DSP blocks are optimized to support DSP applications requiring high data throughput such as FIR filters, FFT functions and encoders. These DSP blocks are flexible and can be configured to implement one of several operational modes to suit a particular application. The built-in shift register chain, adder/subtractor/accumulator block and the summation block minimizes the amount of external logic required to implement these functions, resulting in efficient resource utilization and improved performance and data throughput for DSP applications. The Quartus II

software, together with the LeonardoSpectrum™ and Synplify software provide a complete and easy-to-use flow for implementing these multiplier functions in the DSP blocks.

Referenced Documents

This chapter references the following documents:

- *AN 306: Implementing Multipliers in FPGA Devices*
- *Design and Synthesis* (volume 1) of the *Quartus II Development Software Handbook*
- *Stratix II Architecture* chapter in volume 1 of the *Stratix II Device Handbook*
- *Stratix II GX Architecture* chapter in volume 1 of the *Stratix II GX Device Handbook*
- *Stratix II Device Family Data Sheet* in volume 1 of the *Stratix II Device Handbook*
- *Stratix II GX Device Family Data Sheet* in volume 1 of the *Stratix II GX Device Handbook*

Document Revision History

Table 6–8 shows the revision history for this chapter.

Table 6–8. Document Revision History

Date and Document Version	Changes Made	Summary of Changes
January 2008 v2.2	Added the "Referenced Documents" section.	—
	Minor text edits.	—
No change	For the *Stratix II GX Device Handbook* only: Formerly chapter 11. The chapter number changed due to the addition of the *Stratix II GX Dynamic Reconfiguration* chapter. No content change.	—
February 2007 v2.1	Added the "Document Revision History" section to this chapter.	—
No change	Formerly chapter 10. Chapter number change only due to chapter addition to Section I in February 2006; no content change.	—
October 2005 v2.0	Added chapter to the *Stratix II GX Device Handbook*.	—

Section V. Configuration & Remote System Upgrades

This section provides configuration information for all of the supported configuration schemes for Stratix® II devices. These configuration schemes use either a microprocessor, configuration device, or download cable. There is detailed information on how to design with Altera enhanced configuration devices which includes information on how to manage multiple configuration files and access the on-chip FLASH memory space. The last chapter shows designers how to perform remote and local upgrades for their designs.

This section contains the following chapters:

- Chapter 7, Configuring Stratix II and Stratix II GX Devices
- Chapter 8, Remote System Upgrades with Stratix II and Stratix II GX Devices
- Chapter 9, IEEE 1149.1 (JTAG) Boundary-Scan Testing for Stratix II and Stratix II GX Devices

Revision History

Refer to each chapter for its own specific revision history. For information on when each chapter was updated, refer to the Chapter Revision Dates section, which appears in the full handbook.

7. Configuring Stratix II and Stratix II GX Devices

SII52007-4.5

Introduction

Stratix® II and Stratix II GX devices use SRAM cells to store configuration data. Because SRAM memory is volatile, configuration data must be downloaded to Stratix II and Stratix II GX devices each time the device powers up. Stratix II and Stratix II GX devices can be configured using one of five configuration schemes: the fast passive parallel (FPP), active serial (AS), passive serial (PS), passive parallel asynchronous (PPA), and Joint Test Action Group (JTAG) configuration schemes. All configuration schemes use either an external controller (for example, a MAX® II device or microprocessor) or a configuration device.

Configuration Devices

The Altera enhanced configuration devices (EPC16, EPC8, and EPC4) support a single-device configuration solution for high-density devices and can be used in the FPP and PS configuration schemes. They are ISP-capable through its JTAG interface. The enhanced configuration devices are divided into two major blocks, the controller and the flash memory.



For information on enhanced configuration devices, refer to the *Enhanced Configuration Devices (EPC4, EPC8 & EPC16) Data Sheet* in volume 2 of the *Configuration Handbook*.

The Altera serial configuration devices (EPCS64, EPCS16, and EPCS4) support a single-device configuration solution for Stratix II and Stratix II GX devices and are used in the AS configuration scheme. Serial configuration devices offer a low cost, low pin count configuration solution.



For information on serial configuration devices, refer to the *Serial Configuration Devices (EPCS1, EPCS4, EPCS16, EPCS64, and EPCS128) Data Sheet* chapter in volume 2 of the *Configuration Handbook*.

The EPC2 configuration devices provide configuration support for the PS configuration scheme. The EPC2 device is ISP-capable through its JTAG interface. The EPC2 device can be cascaded to hold large configuration files.



For more information on EPC2 configuration devices, refer to the *Configuration Devices for SRAM-Based LUT Devices Data Sheet* chapter in volume 2 of the *Configuration Handbook*.

The configuration scheme is selected by driving the Stratix II or Stratix II GX device MSEL pins either high or low as shown in Table 7–1. The MSEL pins are powered by the V_{CCIO} power supply of the bank they reside in. The MSEL[3..0] pins have 9-kΩ internal pull-down resistors that are always active. During power-on reset (POR) and during reconfiguration, the MSEL pins have to be at LVTTL V_{IL} and V_{IH} levels to be considered a logic low and logic high.



To avoid any problems with detecting an incorrect configuration scheme, hard-wire the MSEL[] pins to V_{CCPD} and GND, without any pull-up or pull-down resistors. Do not drive the MSEL[] pins by a microprocessor or another device.

Table 7–1. Stratix II and Stratix II GX Configuration Schemes (Part 1 of 2)

Configuration Scheme	MSEL3	MSEL2	MSEL1	MSEL0
Fast passive parallel (FPP)	0	0	0	0
Passive parallel asynchronous (PPA)	0	0	0	1
Passive serial (PS)	0	0	1	0
Remote system upgrade FPP *(1)*	0	1	0	0
Remote system upgrade PPA *(1)*	0	1	0	1
Remote system upgrade PS *(1)*	0	1	1	0
Fast AS (40 MHz) *(2)*	1	0	0	0
Remote system upgrade fast AS (40 MHz) *(2)*	1	0	0	1
FPP with decompression and/or design security feature enabled *(3)*	1	0	1	1
Remote system upgrade FPP with decompression and/or design security feature enabled *(1)*, *(3)*	1	1	0	0
AS (20 MHz) *(2)*	1	1	0	1
Remote system upgrade AS (20 MHz) *(2)*	1	1	1	0
JTAG-based configuration *(5)*	*(4)*	*(4)*	*(4)*	*(4)*

Table 7–1. Stratix II and Stratix II GX Configuration Schemes (Part 2 of 2)				
Configuration Scheme	**MSEL3**	**MSEL2**	**MSEL1**	**MSEL0**

Notes to Table 7–1:
(1) These schemes require that you drive the RUnLU pin to specify either remote update or local update. For more information about remote system upgrades in Stratix II devices, refer to the *Remote System Upgrades With Stratix II & Stratix II GX Devices* chapter in volume 2 of the *Stratix II Device Handbook* or the *Remote System Upgrades With Stratix II & Stratix II GX Devices* chapter in volume 2 of the *Stratix II GX Device Handbook*.
(2) Only the EPCS16 and EPCS64 devices support up to a 40 MHz DCLK. Other EPCS devices support up to a 20 MHz DCLK. Refer to the *Serial Configuration Devices (EPCS1, EPCS4, EPCS16, EPCS64, and EPCS128) Data Sheet* for more information.
(3) These modes are only supported when using a MAX II device or a microprocessor with flash memory for configuration. In these modes, the host system must output a DCLK that is 4× the data rate.
(4) Do not leave the MSEL pins floating. Connect them to V_{CCPD} or ground. These pins support the non-JTAG configuration scheme used in production. If only JTAG configuration is used, you should connect the MSEL pins to ground.
(5) JTAG-based configuration takes precedence over other configuration schemes, which means MSEL pin settings are ignored.

Stratix II and Stratix II GX devices offer design security, decompression, and remote system upgrade features. Design security using configuration bitstream encryption is available in Stratix II and Stratix II GX devices, which protects your designs. Stratix II and Stratix II GX devices can receive a compressed configuration bit stream and decompress this data in real-time, reducing storage requirements and configuration time. You can make real-time system upgrades from remote locations of your Stratix II and Stratix II GX designs with the remote system upgrade feature.

Table 7–2 and Table 7–3 show the uncompressed configuration file sizes for Stratix II and Stratix II GX devices, respectively.

Table 7–2. Stratix II Uncompressed .rbf Sizes Notes (1), (2)		
Device	**Data Size (Bits)**	**Data Size (MBytes)**
EP2S15	4,721,544	0.590
EP2S30	9,640,672	1.205
EP2S60	16,951,824	2.119
EP2S90	25,699,104	3.212
EP2S130	37,325,760	4.666
EP2S180	49,814,760	6.227

Notes to Table 7–2:
(1) These values are final.
(2) **.rbf**: Raw Binary File.

Table 7–3. Stratix II GX Uncompressed .rbf Sizes *Note (1)*		
Device	**Data Size (Bits)**	**Data Size (MBytes)**
EP2SGX30C EP2SGX30D	9,640,672	1.205
EP2SGX60C EP2SGX60D EP2SGX60E	16,951,824	2.119
EP2SGX90E EP2SGX90F	25,699,104	3.212
EP2SGX130G	37,325,760	4.666

Note to Table 7–3:
(1) **.rbf**: Raw Binary File.

Use the data in Table 7–2 to estimate the file size before design compilation. Different configuration file formats, such as a Hexidecimal (**.hex**) or Tabular Text File (**.ttf**) format, will have different file sizes. However, for any specific version of the Quartus® II software, any design targeted for the same device will have the same uncompressed configuration file size. If you are using compression, the file size can vary after each compilation because the compression ratio is dependent on the design.

This chapter explains the Stratix II and Stratix II GX device configuration features and describes how to configure Stratix II and Stratix II GX devices using the supported configuration schemes. This chapter provides configuration pin descriptions and the Stratix II and Stratix II GX device configuration file formats. In this chapter, the generic term device(s) includes all Stratix II and Stratix II GX devices.

For more information on setting device configuration options or creating configuration files, refer to *Software Settings* in volume 2 of the *Configuration Handbook*.

Configuration Features

Stratix II and Stratix II GX devices offer configuration data decompression to reduce configuration file storage, design security using data encryption to protect your designs, and remote system upgrades to allow for remotely updating your Stratix II and Stratix II GX designs. Table 7–4 summarizes which configuration features can be used in each configuration scheme.

Table 7–4. Stratix II and Stratix II GX Configuration Features

Configuration Scheme	Configuration Method	Design Security	Decompression	Remote System Upgrade
FPP	MAX II device or a Microprocessor with flash memory	✓ (1)	✓ (1)	✓
	Enhanced Configuration Device		✓ (2)	✓
AS	Serial Configuration Device	✓	✓	✓ (3)
PS	MAX II device or a Microprocessor with flash memory	✓	✓	✓
	Enhanced Configuration Device	✓	✓	✓
	Download cable	✓	✓	
PPA	MAX II device or a Microprocessor with flash memory			✓
JTAG	MAX II device or a Microprocessor with flash memory			

Notes to Table 7–4:

(1) In these modes, the host system must send a DCLK that is 4× the data rate.

(2) The enhanced configuration device decompression feature is available, while the Stratix II and Stratix II GX decompression feature is not available.

(3) Only remote update mode is supported when using the AS configuration scheme. Local update mode is not supported.

Configuration Data Decompression

Stratix II and Stratix II GX devices support configuration data decompression, which saves configuration memory space and time. This feature allows you to store compressed configuration data in configuration devices or other memory and transmit this compressed bit stream to Stratix II and Stratix II GX devices. During configuration, Stratix II and Stratix II GX devices automatically recognize the compressed file format and decompresses the bit stream in real time and programs its SRAM cells.



Data indicates that compression typically reduces configuration bit stream size by 35 to 55%.

Stratix II and Stratix II GX devices support decompression in the FPP (when using a MAX II device/microprocessor + flash), AS, and PS configuration schemes. Decompression is not supported in the PPA configuration scheme nor in JTAG-based configuration.



When using FPP mode, the intelligent host must provide a DCLK that is 4× the data rate. Therefore, the configuration data must be valid for four DCLK cycles.

The decompression feature supported by Stratix II and Stratix II GX devices is different from the decompression feature in enhanced configuration devices (EPC16, EPC8, and EPC4 devices), although they both use the same compression algorithm. The data decompression feature in the enhanced configuration devices allows them to store compressed data and decompress the bitstream before transmitting it to the target devices. When using Stratix II and Stratix II GX devices in FPP mode with enhanced configuration devices, the decompression feature is available only in the enhanced configuration device, not the Stratix II or Stratix II GX device.

In PS mode, use the Stratix II or Stratix II GX decompression feature because sending compressed configuration data reduces configuration time. Do not use both the Stratix II or Stratix II GX device and the enhanced configuration device decompression features simultaneously. The compression algorithm is not intended to be recursive and could expand the configuration file instead of compressing it further.

When you enable compression, the Quartus II software generates configuration files with compressed configuration data. This compressed file reduces the storage requirements in the configuration device or flash memory, and decreases the time needed to transmit the bitstream to the Stratix II or Stratix II GX device. The time required by a Stratix II or Stratix II GX device to decompress a configuration file is less than the time needed to transmit the configuration data to the device.

There are two ways to enable compression for Stratix II and Stratix II GX bitstreams: before design compilation (in the **Compiler Settings** menu) and after design compilation (in the **Convert Programming Files** window).

To enable compression in the project's compiler settings, select **Device** under the **Assignments** menu to bring up the **Settings** window. After selecting your Stratix II or Stratix II GX device, open the **Device & Pin Options** window, and in the **General** settings tab enable the check box for **Generate compressed bitstreams** (as shown in Figure 7–1).

Figure 7–1. Enabling Compression for Stratix II and Stratix II GX Bitstreams in Compiler Settings

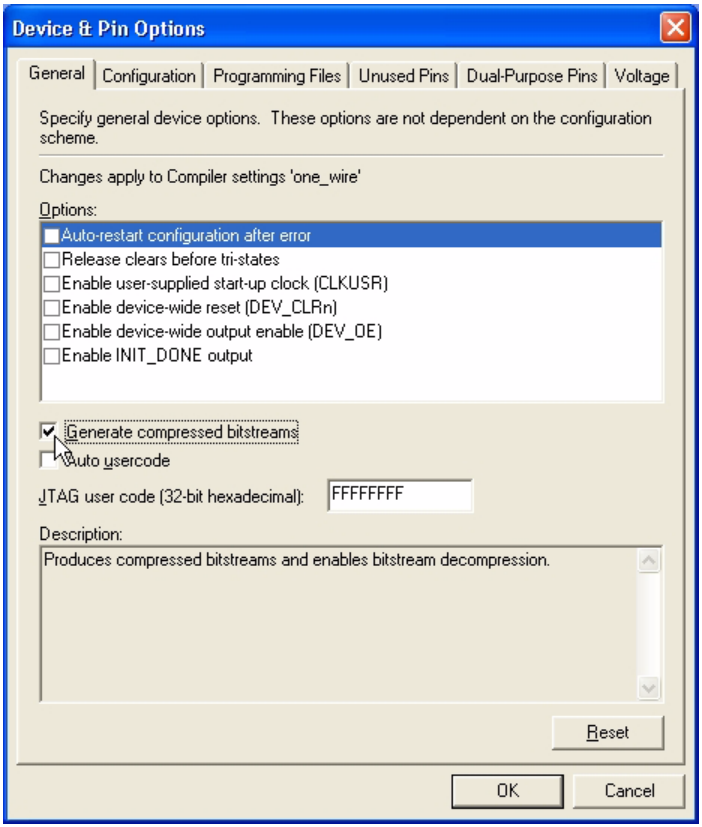

Compression can also be enabled when creating programming files from the **Convert Programming Files** window.

1. Click **Convert Programming Files** (File menu).
2. Select the programming file type (POF, SRAM HEXOUT, RBF, or TTF).
3. For POF output files, select a configuration device.
4. In the **Input files to convert** box, select **SOF Data**.
5. Select **Add File** and add a Stratix II or Stratix II GX device SOF(s).

6. Select the name of the file you added to the **SOF Data** area and click **Properties**.

7. Check the **Compression** check box.

When multiple Stratix II or Stratix II GX devices are cascaded, you can selectively enable the compression feature for each device in the chain if you are using a serial configuration scheme. Figure 7–2 depicts a chain of two Stratix II or Stratix II GX devices. The first Stratix II or Stratix II GX device has compression enabled and therefore receives a compressed bit stream from the configuration device. The second Stratix II or Stratix II GX device has the compression feature disabled and receives uncompressed data.

In a multi-device FPP configuration chain all Stratix II or Stratix II GX devices in the chain must either enable of disable the decompression feature. You can not selectively enable the compression feature for each device in the chain because of the DATA and DCLK relationship.

Figure 7–2. Compressed and Uncompressed Configuration Data in the Same Configuration File

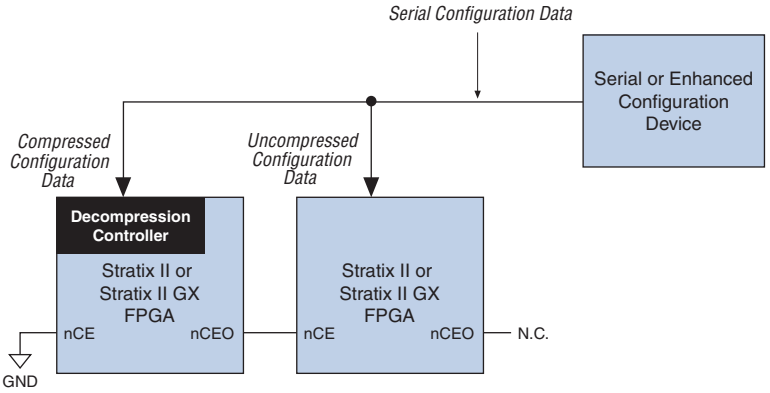

You can generate programming files for this setup from the **Convert Programming Files** window (File menu) in the Quartus II software.

Design Security Using Configuration Bitstream Encryption

Stratix II and Stratix II GX devices are the industry's first devices with the ability to decrypt a configuration bitstream using the Advanced Encryption Standard (AES) algorithm—the most advanced encryption algorithm available today. When using the design security feature, a

128-bit security key is stored in the Stratix II or Stratix II GX device. In order to successfully configure a Stratix II or Stratix II GX device that has the design security feature enabled, it must be configured with a configuration file that was encrypted using the same 128-bit security key. The security key can be stored in non-volatile memory inside the Stratix II or Stratix II GX device. This non-volatile memory does not require any external devices, such as a battery back-up, for storage.



When using a serial configuration scheme such as passive serial (PS) or active serial (AS), configuration time is the same whether or not the design security feature is enabled. If the fast passive parallel (FPP) scheme is used with the design security or decompression feature, a 4× DCLK is required. This results in a slower configuration time when compared to the configuration time of an FPGA that has neither the design security, nor decompression feature enabled. For more information about this feature, contact Altera Applications group.

Remote System Upgrade

Stratix II and Stratix II GX devices feature remote and local update.



For more information about this feature, refer to the *Remote System Upgrades With Stratix II & Stratix II GX Devices* chapter in volume 2 of the *Stratix II Device Handbook* or the *Remote System Upgrades With Stratix II & Stratix II GX Devices* chapter in volume 2 of the *Stratix II GX Device Handbook*

Power-On Reset Circuit

The POR circuit keeps the entire system in reset until the power supply voltage levels have stabilized on power-up. Upon power-up, the device does not release nSTATUS until V_{CCINT}, V_{CCPD}, and V_{CCIO} of banks 3, 4, 7, and 8 are above the device's POR trip point. On power down, V_{CCINT} is monitored for brown-out conditions.

The passive serial (PS) mode (MSEL[3,2,1,0] = 0010) and the Fast passive parallel (FPP) mode (MSEL[3,2,1,0] = 0000) always set bank 3 to use the lower POR trip point consistent with 1.8- and 1.5-V signaling, regardless of the VCCSEL setting. For all other configuration modes, VCCSEL selects the POR trip-point level. Refer to the section "VCCSEL Pin" on page 7–10 for more details.

In Stratix II devices, a pin-selectable option PORSEL is provided that allows you to select between a typical POR time setting of 12 ms or 100 ms. In both cases, you can extend the POR time by using an external component to assert the nSTATUS pin low.

V_{CCPD} Pins

Stratix II and Stratix II GX devices also offer a new power supply, V_{CCPD}, which must be connected to 3.3-V in order to power the 3.3-V/2.5-V buffer available on the configuration input pins and JTAG pins. V_{CCPD} applies to all the JTAG input pins (TCK, TMS, TDI, and TRST) and the configuration pins when VCCSEL is connected to ground. Refer to Table 7–5 for information on the pins affected by VCCSEL.



V_{CCPD} must ramp-up from 0-V to 3.3-V within 100 ms. If V_{CCPD} is not ramped up within this specified time, your Stratix II or Stratix II GX device will not configure successfully. If your system does not allow for a V_{CCPD} ramp-up time of 100 ms or less, you must hold nCONFIG low until all power supplies are stable.

VCCSEL Pin

The VCCSEL pin selects the type of input buffer used on configuration input pins and it selects the POR trip point voltage level for V_{CCIO} bank 3 powered by VCCIO3 pins.



For more information, refer to Table 7–24 on page 7–105.

The configuration input pins and the PLL_ENA pin (Table 7–5) have a dual buffer design. These pins have a 3.3-V/2.5-V input buffer and a 1.8-V/1.5-V input buffer. The VCCSEL input pin selects which input buffer is used during configuration. The 3.3-V/2.5-V input buffer is powered by V_{CCPD}, while the 1.8-V/1.5-V input buffer is powered by V_{CCIO}. After configuration, the dual-purpose configuration pins are powered by the V_{CCIO} pins of the bank in which they reside. Table 7–5 shows the pins affected by VCCSEL.

Table 7–5. Pins Affected by the Voltage Level at VCCSEL

Pin	VCCSEL = LOW (connected to GND)	VCCSEL = HIGH (connected to V_{CCPD})
nSTATUS (when used as an input)	3.3/2.5-V input buffer is selected. Input buffer is powered by V_{CCPD}.	1.8/1.5-V input buffer is selected. Input buffer is powered by V_{CCIO} of the I/O bank. These input buffers are 3.3 V tolerant.
nCONFIG		
CONF_DONE (when used as an input)		
DATA[7..0]		
nCE		
DCLK (when used as an input)		
CS		
nWS		
nRS		
nCS		
CLKUSR		
DEV_OE		
DEV_CLRn		
RUnLU		
PLL_ENA		

VCCSEL is sampled during power-up. Therefore, the VCCSEL setting cannot change on the fly or during a reconfiguration. The VCCSEL input buffer is powered by V_{CCINT} and has an internal 5-kΩ pull-down resistor that is always active.

VCCSEL must be hardwired to V_{CCPD} or GND.

A logic high selects the 1.8-V/1.5-V input buffer, and a logic low selects the 3.3-V/2.5-V input buffer. VCCSEL should be set to comply with the logic levels driven out of the configuration device or MAX II device or a microprocessor with flash memory.

VCCSEL also sets the POR trip point for I/O bank 3 to ensure that this I/O bank has powered up to the appropriate voltage levels before configuration begins. For passive serial (PS) mode (MSEL[3..0] = 0010) and for Fast passive parallel (FPP) mode (MSEL[3..0] = 0000) the POR circuitry selects the trip point associated with 1.5-V/1.8-V signaling. For all other configuration modes defined by MSEL[3..0] settings (other

than 00X0 (MSEL[1] = X, "don't care"), VCCSEL=GND selects the higher I/O bank 3 POR trip point for 2.5-V/3.3-V signaling and VCCSEL=VCCPD selects the lower I/O bank 3 POR trip point associated with 1.5-V/1.8-V signaling.

For all configuration modes with MSEL[3..0] not equal to 00X0 (MSEL[1] = X, "don't care"), if VCCIO of configuration bank 3 is powered by 1.8-V or 1.5-V and VCCSEL = GND, the voltage supplied to this I/O bank(s) may never reach the POR trip point, which prevents the device from beginning configuration.

If the VCCIO of I/O bank 3 is powered by 1.5- or 1.8-V and the configuration signals used require 3.3- or 2.5-V signaling, you should set VCCSEL to VCCPD to enable the 1.8-/1.5-V input buffers for configuration. The 1.8-V/1.5-V input buffers are 3.3-V tolerant.



The fast passive parallel (FPP) and passive serial (PS) modes always enable bank 3 to use the POR trip point to be consistent with 1.8- and 1.5-V signaling, regardless of the VCCSEL setting.

Table 7–6 shows how you should set VCCSEL depending on the configuration mode, the voltage level on VCCIO3 pins that power bank 3, and the supported configuration input voltages.

Table 7–6. Supported V_{CCSEL} Setting Based on Mode, VCCIO3, and Input Configuration Voltage

Configuration Mode	V_{CCIO} (Bank 3)	Supported Configuration Input Voltages	V_{CCSEL}
All modes	3.3-V/2.5-V	3.3-V/2.5-V	GND
All modes	1.8-V/1.5-V	3.3-V/2.5-V	V_{CCPD} *(1)*
All modes	1.8-V/1.5-V	1.8-V/1.5-V	V_{CCPD}
—	3.3-V/2.5-V	1.8-V/1.5-V	Not Supported

Note to Table 7–6:

(1) The VCCSEL pin can also be connected to GND for PS (MSEL[3..0]=0010) and FPP (MSEL[3..0]=0000) modes.

Table 7–7 shows the configuration mode support for banks 4, 7, and 8.

Table 7–7. Stratix II Configuration Mode Support for Banks 4, 7 and 8

Configuration Mode	Configuration Voltage/V_{CCIO} Support for Banks 4, 7, and 8		
	3.3/3.3	1.8/1.8	3.3/1.8
	VCCSEL = GND	VCCSEL = VCCPD	VCCSEL = GND
Fast passive parallel	Y	Y	Y
Passive parallel asynchronous	Y	Y	Y
Passive serial	Y	Y	Y
Remote system upgrade FPP	Y	Y	Y
Remote system upgrade PPA	Y	Y	Y
Remote system upgrade PS	Y	Y	Y
Fast AS (40 MHz)	Y	Y	Y
Remote system upgrade fast AS (40 MHz)	Y	Y	Y
FPP with decompression and/or design security	Y	Y	Y
Remote system upgrade FPP with decompression and/or design security feature enabled	Y	Y	Y
AS (20 MHz)	Y	Y	Y
Remote system upgrade AS (20 MHz)	Y	Y	Y

Output Configuration Pins

You must verify that the configuration output pins for your chosen configuration modes meet the V_{IH} of the configuration device. Refer to Table 7–22 on page 7–94 for a consolidated list of configuration output pins.

The V_{IH} of 3.3 V or 2.5 V configuration devices will not be met when the V_{CCIO} of the output configuration pins are 1.8 V or 1.5 V. Level shifters will be required to meet the input high level voltage threshold V_{IH}.

Note that AS mode is only applicable for 3.3-V configurations. If I/O bank 3 is less than 3.3 V, level shifters are required on the output pins (DCLK, nCSO, ASDO) from the Stratix II or Stratix II GX device back to the EPCS device.

The key is to ensure the VCCIO voltage of bank 3 is high enough to trip the VCCIO3 POR trip point on power-up. Also, to make sure the configuration device meets the V_{IH} for the configuration input pins based on the selected input buffer.

Fast Passive Parallel Configuration

Fast passive parallel (FPP) configuration in Stratix II and Stratix II GX devices is designed to meet the continuously increasing demand for faster configuration times. Stratix II and Stratix II GX devices are designed with the capability of receiving byte-wide configuration data per clock cycle. Table 7–8 shows the MSEL pin settings when using the FFP configuration scheme.

Table 7–8. Stratix II and Stratix II GX MSEL Pin Settings for FPP Configuration Schemes Notes (1), (2), and (3)

Configuration Scheme	MSEL3	MSEL2	MSEL1	MSEL0
FPP when not using remote system upgrade or decompression and/or design security feature	0	0	0	0
FPP when using remote system upgrade *(4)*	0	1	0	0
FPP with decompression and/or design security feature enabled *(5)*	1	0	1	1
FPP when using remote system upgrade and decompression and/or design security feature *(4)*, *(5)*	1	1	0	0

Notes to Table 7–8:

(1) You must verify the configuration output pins for your chosen configuraiton modes meet the V_{IH} of the configuration device. Refer to Table 7–22 for a consolidated list of configuration output pins.

(2) The V_{IH} of 3.3-V or 2.5-V configuration devices will not be met when the VCCIO of the output configuration pins is 1.8-V or 1.5-V. Level shifters will be required to meet the input high level voltage threshold V_{IH}.

(3) The VCCSEL signal does not control TDO or nCEO. During configuration, these pins drive out voltage levels corresponding to the VCCIO supply voltage that powers the I/O bank containing the pin. For more information about multi-volt support, including information about using TDO and nCEO in multi-volt systems, refer to the *Stratix II GX Architecture* chapter in volume 1 of the *Stratix II GX Device Handbook*.

(4) These schemes require that you drive the RUnLU pin to specify either remote update or local update. For more information about remote system upgrade in Stratix II devices, refer to the *Remote System Upgrades With Stratix II & Stratix II GX Devices* chapter in volume 2 of the *Stratix II Device Handbook* or the *Remote System Upgrades With Stratix II & Stratix II GX Devices* chapter in volume 2 of the *Stratix II GX Device Handbook*.

(5) These modes are only supported when using a MAX II device or a microprocessor with flash memory for configuration. In these modes, the host system must output a DCLK that is 4× the data rate.

FPP configuration of Stratix II and Stratix II GX devices can be performed using an intelligent host, such as a MAX II device, a microprocessor, or an Altera enhanced configuration device.

FPP Configuration Using a MAX II Device as an External Host

FPP configuration using compression and an external host provides the fastest method to configure Stratix II and Stratix II GX devices. In the FPP configuration scheme, a MAX II device can be used as an intelligent host that controls the transfer of configuration data from a storage device, such as flash memory, to the target Stratix II or Stratix II GX device. Configuration data can be stored in RBF, HEX, or TTF format. When using the MAX II devices as an intelligent host, a design that controls the configuration process, such as fetching the data from flash memory and sending it to the device, must be stored in the MAX II device.



If you are using the Stratix II or Stratix II GX decompression and/or design security feature, the external host must be able to send a DCLK frequency that is 4× the data rate.

The 4× DCLK signal does not require an additional pin and is sent on the DCLK pin. The maximum DCLK frequency is 100 MHz, which results in a maximum data rate of 200 Mbps. If you are not using the Stratix II or Stratix II GX decompression or design security features, the data rate is 8× the DCLK frequency.

Figure 7–3 shows the configuration interface connections between the Stratix II or Stratix II GX device and a MAX II device for single device configuration.

Figure 7–3. Single Device FPP Configuration Using an External Host

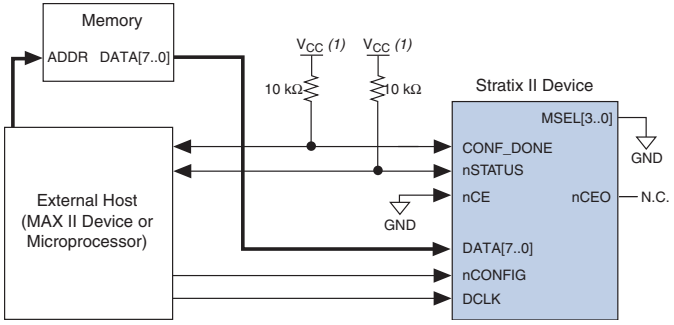

Note to Figure 7–3:

(1) The pull-up resistor should be connected to a supply that provides an acceptable input signal for the device. V_{CC} should be high enough to meet the V_{IH} specification of the I/O on the device and the external host.

Upon power-up, the Stratix II and Stratix II GX devices go through a Power-On Reset (POR). The POR delay is dependent on the PORSEL pin setting; when PORSEL is driven low, the POR time is approximately 100 ms, if PORSEL is driven high, the POR time is approximately 12 ms. During POR, the device resets, holds nSTATUS low, and tri-states all user I/O pins. Once the device successfully exits POR, all user I/O pins continue to be tri-stated. If nIO_pullup is driven low during power-up and configuration, the user I/O pins and dual-purpose I/O pins have weak pull-up resistors, which are on (after POR) before and during configuration. If nIO_pullup is driven high, the weak pull-up resistors are disabled.



You can hold nConfig low in order to stop device configuration.



The value of the weak pull-up resistors on the I/O pins that are on before and during configuration can be found in the *DC & Switching Characteristics* chapter in volume 1 of the *Stratix II Device Handbook* or the *DC & Switching Characteristics* chapter in volume 1 of the *Stratix II GX Device Handbook*.

The configuration cycle consists of three stages: reset, configuration and initialization. While nCONFIG or nSTATUS are low, the device is in the reset stage. To initiate configuration, the MAX II device must drive the nCONFIG pin from low-to-high.



V_{CCINT}, V_{CCIO}, and V_{CCPD} of the banks where the configuration and JTAG pins reside need to be fully powered to the appropriate voltage levels in order to begin the configuration process.

When nCONFIG goes high, the device comes out of reset and releases the open-drain nSTATUS pin, which is then pulled high by an external 10-kΩ pull-up resistor. Once nSTATUS is released, the device is ready to receive configuration data and the configuration stage begins. When nSTATUS is pulled high, the MAX II device places the configuration data one byte at a time on the DATA[7..0] pins.



Stratix II and Stratix II GX devices receive configuration data on the DATA[7..0] pins and the clock is received on the DCLK pin. Data is latched into the device on the rising edge of DCLK. If you are using the Stratix II or Stratix II GX decompression and/or design security feature, configuration data is latched on the rising edge of every fourth DCLK cycle. After the configuration data is latched in, it is processed during the following three DCLK cycles.

Data is continuously clocked into the target device until CONF_DONE goes high. The CONF_DONE pin goes high one byte early in parallel configuration (FPP and PPA) modes. The last byte is required for serial configuration (AS and PS) modes. After the device has received the next to last byte of the configuration data successfully, it releases the open-drain CONF_DONE pin, which is pulled high by an external 10-kΩ pull-up resistor. A low-to-high transition on CONF_DONE indicates configuration is complete and initialization of the device can begin. The CONF_DONE pin must have an external 10-kΩ pull-up resistor in order for the device to initialize.

In Stratix II and Stratix II GX devices, the initialization clock source is either the internal oscillator (typically 10 MHz) or the optional CLKUSR pin. By default, the internal oscillator is the clock source for initialization. If the internal oscillator is used, the Stratix II or Stratix II GX device provides itself with enough clock cycles for proper initialization. Therefore, if the internal oscillator is the initialization clock source, sending the entire configuration file to the device is sufficient to configure and initialize the device. Driving DCLK to the device after configuration is complete does not affect device operation.

You can also synchronize initialization of multiple devices or to delay initialization with the CLKUSR option. The **Enable user-supplied start-up clock** (**CLKUSR**) option can be turned on in the Quartus II software from the **General** tab of the **Device & Pin Options** dialog box. Supplying a clock on CLKUSR does not affect the configuration process. The CONF_DONE pin goes high one byte early in parallel configuration (FPP and PPA) modes. The last byte is required for serial configuration (AS and PS) modes. After the CONF_DONE pin transitions high, CLKUSR is enabled after the time specified as t_{CD2CU}. After this time period elapses, Stratix II and Stratix II GX devices require 299 clock cycles to initialize properly and enter user mode. Stratix II and Stratix II GX devices support a CLKUSR f_{MAX} of 100 MHz.

An optional INIT_DONE pin is available, which signals the end of initialization and the start of user-mode with a low-to-high transition. This **Enable INIT_DONE Output** option is available in the Quartus II software from the **General** tab of the **Device & Pin Options** dialog box. If the INIT_DONE pin is used, it is high because of an external 10-kΩ pull-up resistor when nCONFIG is low and during the beginning of configuration. Once the option bit to enable INIT_DONE is programmed into the device (during the first frame of configuration data), the INIT_DONE pin goes low. When initialization is complete, the INIT_DONE pin is released and pulled high. The MAX II device must be able to detect this low-to-high transition, which signals the device has

entered user mode. When initialization is complete, the device enters user mode. In user-mode, the user I/O pins no longer have weak pull-up resistors and function as assigned in your design.

To ensure DCLK and DATA[7..0] are not left floating at the end of configuration, the MAX II device must drive them either high or low, whichever is convenient on your board. The DATA[7..0] pins are available as user I/O pins after configuration. When you select the FPP scheme in the Quartus II software, as a default, these I/O pins are tri-stated in user mode. To change this default option in the Quartus II software, select the **Pins** tab of the **Device & Pin Options** dialog box.

The configuration clock (DCLK) speed must be below the specified frequency to ensure correct configuration. No maximum DCLK period exists, which means you can pause configuration by halting DCLK for an indefinite amount of time.



If you are using the Stratix II or Stratix II GX decompression and/or design security feature and need to stop DCLK, it can only be stopped three clock cycles after the last data byte was latched into the Stratix II or Stratix II GX device.

By stopping DCLK, the configuration circuit allows enough clock cycles to process the last byte of latched configuration data. When the clock restarts, the MAX II device must provide data on the DATA[7..0] pins prior to sending the first DCLK rising edge.

If an error occurs during configuration, the device drives its nSTATUS pin low, resetting itself internally. The low signal on the nSTATUS pin also alerts the MAX II device that there is an error. If the **Auto-restart configuration after error** option (available in the Quartus II software from the **General** tab of the **Device & Pin Options** (dialog box) is turned on, the device releases nSTATUS after a reset time-out period (maximum of 100 µs). After nSTATUS is released and pulled high by a pull-up resistor, the MAX II device can try to reconfigure the target device without needing to pulse nCONFIG low. If this option is turned off, the MAX II device must generate a low-to-high transition (with a low pulse of at least 2 µs) on nCONFIG to restart the configuration process.

The MAX II device can also monitor the CONF_DONE and INIT_DONE pins to ensure successful configuration. The CONF_DONE pin must be monitored by the MAX II device to detect errors and determine when programming completes. If all configuration data is sent, but the CONF_DONE or INIT_DONE signals have not gone high, the MAX II device will reconfigure the target device.

If the optional CLKUSR pin is used and nCONFIG is pulled low to restart configuration during device initialization, you need to ensure CLKUSR continues toggling during the time nSTATUS is low (maximum of 100 µs).

When the device is in user-mode, initiating a reconfiguration is done by transitioning the nCONFIG pin low-to-high. The nCONFIG pin should be low for at least 2 µs. When nCONFIG is pulled low, the device also pulls nSTATUS and CONF_DONE low and all I/O pins are tri-stated. Once nCONFIG returns to a logic high level and nSTATUS is released by the device, reconfiguration begins.

Figure 7–4 shows how to configure multiple devices using a MAX II device. This circuit is similar to the FPP configuration circuit for a single device, except the Stratix II or Stratix II GX devices are cascaded for multi-device configuration.

Figure 7–4. Multi-Device FPP Configuration Using an External Host

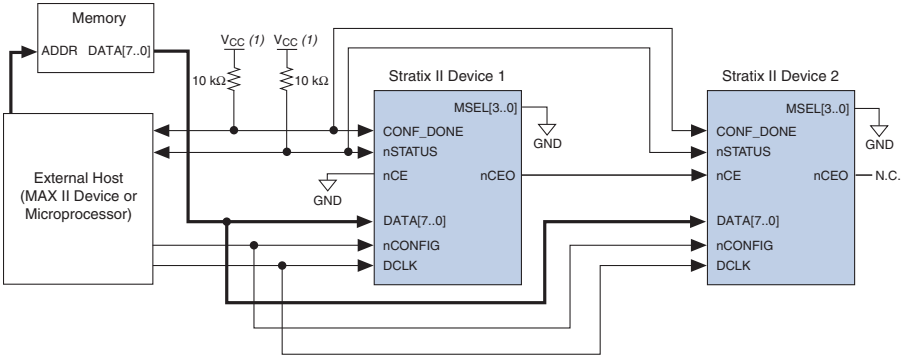

Note to Figure 7–4:

(1) The pull-up resistor should be connected to a supply that provides an acceptable input signal for all devices in the chain. V_{CC} should be high enough to meet the V_{IH} specification of the I/O standard on the device and the external host.

In multi-device FPP configuration, the first device's nCE pin is connected to GND while its nCEO pin is connected to nCE of the next device in the chain. The last device's nCE input comes from the previous device, while its nCEO pin is left floating. After the first device completes configuration in a multi-device configuration chain, its nCEO pin drives low to activate the second device's nCE pin, which prompts the second device to begin configuration. The second device in the chain begins configuration within one clock cycle; therefore, the transfer of data destinations is transparent to the MAX II device. All other configuration pins (nCONFIG, nSTATUS, DCLK, DATA[7..0], and CONF_DONE) are connected to every device in

the chain. The configuration signals may require buffering to ensure signal integrity and prevent clock skew problems. Ensure that the DCLK and DATA lines are buffered for every fourth device. Because all device CONF_DONE pins are tied together, all devices initialize and enter user mode at the same time.

All nSTATUS and CONF_DONE pins are tied together and if any device detects an error, configuration stops for the entire chain and the entire chain must be reconfigured. For example, if the first device flags an error on nSTATUS, it resets the chain by pulling its nSTATUS pin low. This behavior is similar to a single device detecting an error.

If the **Auto-restart configuration after error** option is turned on, the devices release their nSTATUS pins after a reset time-out period (maximum of 100 µs). After all nSTATUS pins are released and pulled high, the MAX II device can try to reconfigure the chain without pulsing nCONFIG low. If this option is turned off, the MAX II device must generate a low-to-high transition (with a low pulse of at least 2 µs) on nCONFIG to restart the configuration process.

In a multi-device FPP configuration chain, all Stratix II or Stratix II GX devices in the chain must either enable or disable the decompression and/or design security feature. You can not selectively enable the decompression and/or design security feature for each device in the chain because of the DATA and DCLK relationship. If the chain contains devices that do not support design security, you should use a serial configuration scheme.

If a system has multiple devices that contain the same configuration data, tie all device nCE inputs to GND, and leave nCEO pins floating. All other configuration pins (nCONFIG, nSTATUS, DCLK, DATA[7..0], and CONF_DONE) are connected to every device in the chain. Configuration signals may require buffering to ensure signal integrity and prevent clock skew problems. Ensure that the DCLK and DATA lines are buffered for every fourth device. Devices must be the same density and package. All devices start and complete configuration at the same time. Figure 7–5 shows multi-device FPP configuration when both Stratix II or Stratix II GX devices are receiving the same configuration data.

Figure 7–5. Multiple-Device FPP Configuration Using an External Host When Both Devices Receive the Same Data

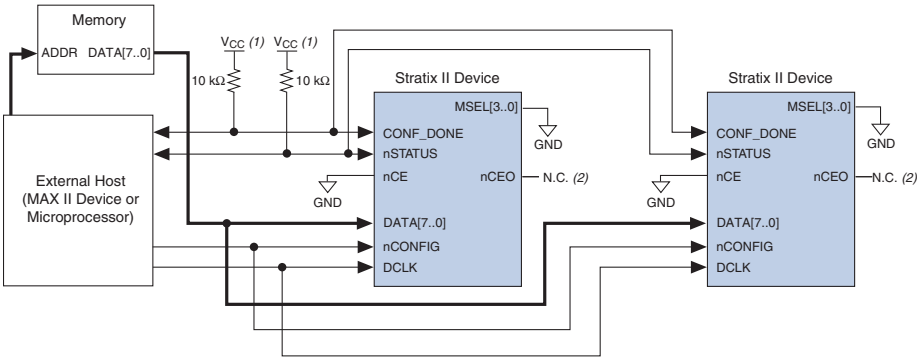

Notes to Figure 7–5:

(1) The pull-up resistor should be connected to a supply that provides an acceptable input signal for all devices in the chain. V_{CC} should be high enough to meet the V_{IH} specification of the I/O on the device and the external host.

(2) The nCEO pins of both Stratix II or Stratix II GX devices are left unconnected when configuring the same configuration data into multiple devices.

You can use a single configuration chain to configure Stratix II or Stratix II GX devices with other Altera devices that support FPP configuration, such as Stratix devices. To ensure that all devices in the chain complete configuration at the same time or that an error flagged by one device initiates reconfiguration in all devices, tie all of the device CONF_DONE and nSTATUS pins together.

For more information on configuring multiple Altera devices in the same configuration chain, refer to *Configuring Mixed Altera FPGA Chains* in volume 2 of the *Configuration Handbook*.

FPP Configuration Timing

Figure 7–6 shows the timing waveform for FPP configuration when using a MAX II device as an external host. This waveform shows the timing when the decompression and the design security feature are not enabled.

Figure 7–6. FPP Configuration Timing Waveform *Notes (1), (2)*

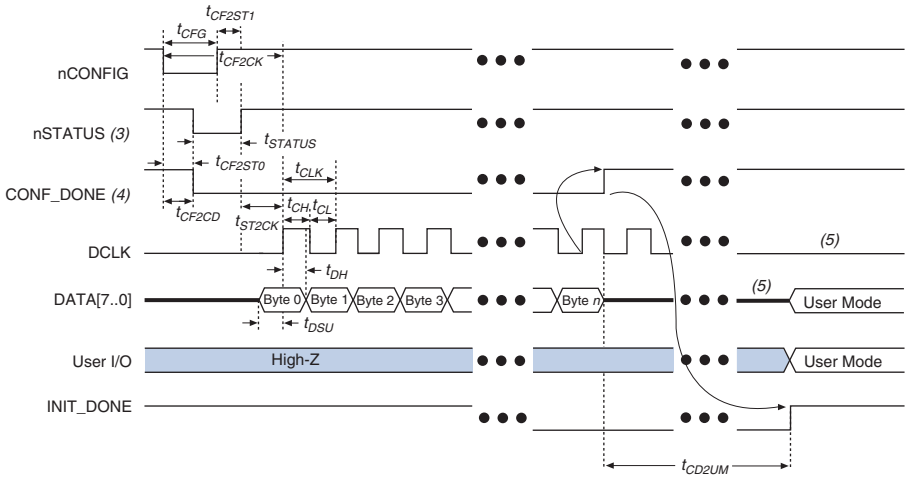

Notes to Figure 7–6:

(1) This timing waveform should be used when the decompression and design security feature are not used.
(2) The beginning of this waveform shows the device in user-mode. In user-mode, nCONFIG, nSTATUS, and CONF_DONE are at logic high levels. When nCONFIG is pulled low, a reconfiguration cycle begins.
(3) Upon power-up, the Stratix II or Stratix II GX device holds nSTATUS low for the time of the POR delay.
(4) Upon power-up, before and during configuration, CONF_DONE is low.
(5) DCLK should not be left floating after configuration. It should be driven high or low, whichever is more convenient.
(6) DATA[7..0] are available as user I/O pins after configuration and the state of these pins depends on the dual-purpose pin settings.

Table 7–9 defines the timing parameters for Stratix II and Stratix II GX devices for FPP configuration when the decompression and the design security features are not enabled.

Table 7–9. FPP Timing Parameters for Stratix II and Stratix II GX Devices (Part 1 of 2) *Notes (1), (2)*

Symbol	Parameter	Min	Max	Units
t_{CF2CD}	nCONFIG low to CONF_DONE low		800	ns
t_{CF2ST0}	nCONFIG low to nSTATUS low		800	ns
t_{CFG}	nCONFIG low pulse width	2		µs
t_{STATUS}	nSTATUS low pulse width	10	100 *(3)*	µs
t_{CF2ST1}	nCONFIG high to nSTATUS high		100 *(3)*	µs
t_{CF2CK}	nCONFIG high to first rising edge on DCLK	100		µs
t_{ST2CK}	nSTATUS high to first rising edge of DCLK	2		µs

Table 7–9. FPP Timing Parameters for Stratix II and Stratix II GX Devices (Part 2 of 2) *Notes (1), (2)*

Symbol	Parameter	Min	Max	Units
t_{DSU}	Data setup time before rising edge on DCLK	5		ns
t_{DH}	Data hold time after rising edge on DCLK	0		ns
t_{CH}	DCLK high time	4		ns
t_{CL}	DCLK low time	4		ns
t_{CLK}	DCLK period	10		ns
f_{MAX}	DCLK frequency		100	MHz
t_R	Input rise time		40	ns
t_F	Input fall time		40	ns
t_{CD2UM}	CONF_DONE high to user mode *(4)*	20	100	µs
t_{CD2CU}	CONF_DONE high to CLKUSR enabled	4 × maximum DCLK period		
t_{CD2UMC}	CONF_DONE high to user mode with CLKUSR option on	t_{CD2CU} + (299 × CLKUSR period)		

Notes to Table 7–9:

(1) This information is preliminary.

(2) These timing parameters should be used when the decompression and design security feature are not used.

(3) This value is obtainable if users do not delay configuration by extending the nCONFIG or nSTATUS low pulse width.

(4) The minimum and maximum numbers apply only if the internal oscillator is chosen as the clock source for starting up the device.

Figure 7–7 shows the timing waveform for FPP configuration when using a MAX II device as an external host. This waveform shows the timing when the decompression and/or the design security feature are enabled.

Figure 7–7. FPP Configuration Timing Waveform With Decompression or Design Security Feature Enabled *Notes (1), (2)*

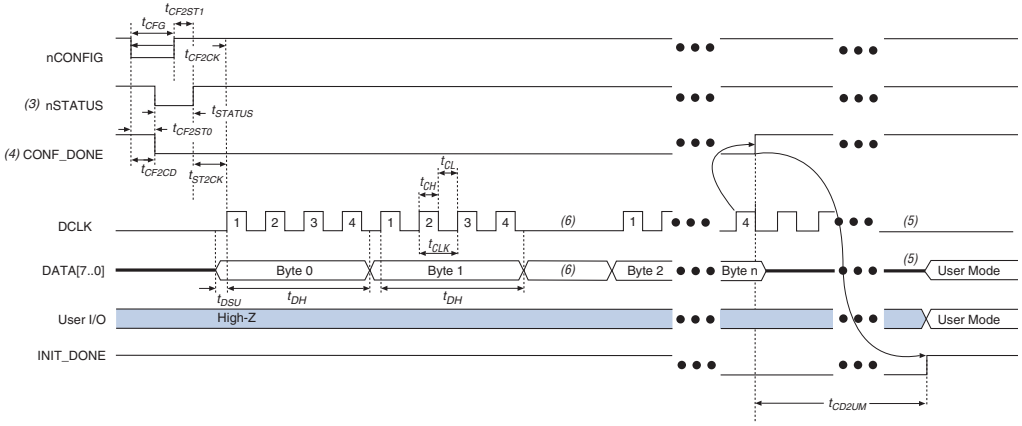

Notes to Figure 7–7:

(1) This timing waveform should be used when the decompression and/or design security feature are used.
(2) The beginning of this waveform shows the device in user-mode. In user-mode, `nCONFIG`, `nSTATUS` and `CONF_DONE` are at logic high levels. When `nCONFIG` is pulled low, a reconfiguration cycle begins.
(3) Upon power-up, the Stratix II or Stratix II GX device holds `nSTATUS` low for the time of the POR delay.
(4) Upon power-up, before and during configuration, `CONF_DONE` is low.
(5) `DCLK` should not be left floating after configuration. It should be driven high or low, whichever is more convenient.
(6) `DATA[7..0]` are available as user I/O pins after configuration and the state of these pins depends on the dual-purpose pin settings.
(7) If needed, `DCLK` can be paused by holding it low. When `DCLK` restarts, the external host must provide data on the `DATA[7..0]` pins prior to sending the first `DCLK` rising edge.

Table 7–10 defines the timing parameters for Stratix II and Stratix II GX devices for FPP configuration when the decompression and/or the design security feature are enabled.

Table 7–10. FPP Timing Parameters for Stratix II and Stratix II GX Devices With Decompression or Design Security Feature Enabled *Note (1)*

Symbol	Parameter	Min	Max	Units
t_{CF2CD}	nCONFIG low to CONF_DONE low		800	ns
t_{CF2ST0}	nCONFIG low to nSTATUS low		800	ns
t_{CFG}	nCONFIG low pulse width	2		µs
t_{STATUS}	nSTATUS low pulse width	10	100 *(2)*	µs
t_{CF2ST1}	nCONFIG high to nSTATUS high		100 *(2)*	µs
t_{CF2CK}	nCONFIG high to first rising edge on DCLK	100		µs
t_{ST2CK}	nSTATUS high to first rising edge of DCLK	2		µs
t_{DSU}	Data setup time before rising edge on DCLK	5		ns
t_{DH}	Data hold time after rising edge on DCLK	30		ns
t_{CH}	DCLK high time	4		ns
t_{CL}	DCLK low time	4		ns
t_{CLK}	DCLK period	10		ns
f_{MAX}	DCLK frequency		100	MHz
t_{DATA}	Data rate		200	Mbps
t_{R}	Input rise time		40	ns
t_{F}	Input fall time		40	ns
t_{CD2UM}	CONF_DONE high to user mode *(3)*	20	100	µs
t_{CD2CU}	CONF_DONE high to CLKUSR enabled	4 × maximum DCLK period		
t_{CD2UMC}	CONF_DONE high to user mode with CLKUSR option on	t_{CD2CU} + (299 × CLKUSR period)		

Notes to Table 7–10:

(1) These timing parameters should be used when the decompression and design security feature are used.

(2) This value is obtainable if users do not delay configuration by extending the nCONFIG or nSTATUS low pulse width.

(3) The minimum and maximum numbers apply only if the internal oscillator is chosen as the clock source for starting up the device.

Device configuration options and how to create configuration files are discussed further in the *Software Settings* chapter in the *Configuration Handbook*.

FPP Configuration Using a Microprocessor

In the FPP configuration scheme, a microprocessor can control the transfer of configuration data from a storage device, such as flash memory, to the target Stratix II or Stratix II GX device.



All information in "FPP Configuration Using a MAX II Device as an External Host" on page 7–15 is also applicable when using a microprocessor as an external host. Refer to that section for all configuration and timing information.

FPP Configuration Using an Enhanced Configuration Device

In the FPP configuration scheme, an enhanced configuration device sends a byte of configuration data every DCLK cycle to the Stratix II or Stratix II GX device. Configuration data is stored in the configuration device.



When configuring your Stratix II or Stratix II GX device using FPP mode and an enhanced configuration device, the enhanced configuration device decompression feature is available while the Stratix II and Stratix II GX decompression and design security features are not.

Figure 7–8 shows the configuration interface connections between a Stratix II or Stratix II GX device and the enhanced configuration device for single device configuration.



The figures in this chapter only show the configuration-related pins and the configuration pin connections between the configuration device and the device.



For more information on the enhanced configuration device and flash interface pins, such as PGM[2..0], EXCLK, PORSEL, A[20..0], and DQ[15..0], refer to the *Enhanced Configuration Devices (EPC4, EPC8 & EPC16) Data Sheet* in volume 2 of the *Configuration Handbook*.

Figure 7–8. Single Device FPP Configuration Using an Enhanced Configuration Device

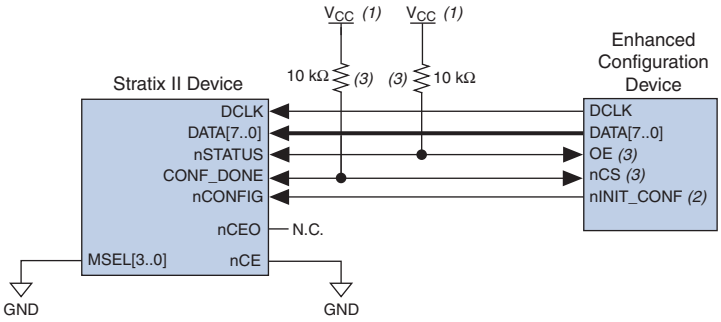

Notes to Figure 7–8:

(1) The pull-up resistor should be connected to the same supply voltage as the configuration device.

(2) The nINIT_CONF pin is available on enhanced configuration devices and has an internal pull-up resistor that is always active. This means an external pull-up resistor should not be used on the nINIT_CONF-nCONFIG line. The nINIT_CONF pin does not need to be connected if its functionality is not used. If nINIT_CONF is not used, nCONFIG must be pulled to V_{CC} either directly or through a resistor.

(3) The enhanced configuration devices' OE and nCS pins have internal programmable pull-up resistors. If internal pull-up resistors are used, external pull-up resistors should not be used on these pins. The internal pull-up resistors are used by default in the Quartus II software. To turn off the internal pull-up resistors, check the **Disable nCS and OE pull-ups on configuration device** option when generating programming files.

The value of the internal pull-up resistors on the enhanced configuration devices can be found in the *Enhanced Configuration Devices (EPC4, EPC8 & EPC16) Data Sheet* in volume 2 of the *Configuration Handbook*.

When using enhanced configuration devices, you can connect the device's nCONFIG pin to nINIT_CONF pin of the enhanced configuration device, which allows the INIT_CONF JTAG instruction to initiate device configuration. The nINIT_CONF pin does not need to be connected if its functionality is not used. If nINIT_CONF is not used, nCONFIG must be pulled to V_{CC} either directly or through a resistor. An internal pull-up resistor on the nINIT_CONF pin is always active in the enhanced configuration devices, which means an external pull-up resistor should not be used if nCONFIG is tied to nINIT_CONF.

Upon power-up, the Stratix II or Stratix II GX device goes through a POR. The POR delay is dependent on the PORSEL pin setting; when PORSEL is driven low, the POR time is approximately 100 ms, if PORSEL is driven high, the POR time is approximately 12 ms. During POR, the device will reset, hold nSTATUS low, and tri-state all user I/O pins. The

configuration device also goes through a POR delay to allow the power supply to stabilize. The POR time for enhanced configuration devices can be set to either 100 ms or 2 ms, depending on its PORSEL pin setting. If the PORSEL pin is connected to GND, the POR delay is 100 ms. If the PORSEL pin is connected to V_{CC}, the POR delay is 2 ms. During this time, the configuration device drives its OE pin low. This low signal delays configuration because the OE pin is connected to the target device's nSTATUS pin.



When selecting a POR time, you need to ensure that the device completes power-up before the enhanced configuration device exits POR. Altera recommends that you use a 12-ms POR time for the Stratix II or Stratix II GX device, and use a 100-ms POR time for the enhanced configuration device.

When both devices complete POR, they release their open-drain OE or nSTATUS pin, which is then pulled high by a pull-up resistor. Once the device successfully exits POR, all user I/O pins continue to be tri-stated. If nIO_pullup is driven low during power-up and configuration, the user I/O pins and dual-purpose I/O pins will have weak pull-up resistors, which are on (after POR) before and during configuration. If nIO_pullup is driven high, the weak pull-up resistors are disabled.



The value of the weak pull-up resistors on the I/O pins that are on before and during configuration can be found in the *Stratix II Device Handbook* or the *Stratix II GX Device Handbook*.

When the power supplies have reached the appropriate operating voltages, the target device senses the low-to-high transition on nCONFIG and initiates the configuration cycle. The configuration cycle consists of three stages: reset, configuration and initialization. While nCONFIG or nSTATUS are low, the device is in reset. The beginning of configuration can be delayed by holding the nCONFIG or nSTATUS pin low.



V_{CCINT}, V_{CCIO} and V_{CCPD} of the banks where the configuration and JTAG pins reside need to be fully powered to the appropriate voltage levels in order to begin the configuration process.

When nCONFIG goes high, the device comes out of reset and releases the nSTATUS pin, which is pulled high by a pull-up resistor. Enhanced configuration devices have an optional internal pull-up resistor on the OE pin. This option is available in the Quartus II software from the **General** tab of the **Device & Pin Options** dialog box. If this internal pull-up resistor is not used, an external 10-kΩ pull-up resistor on the OE-nSTATUS line is required. Once nSTATUS is released, the device is ready to receive configuration data and the configuration stage begins.

When nSTATUS is pulled high, the configuration device's OE pin also goes high and the configuration device clocks data out to the device using the Stratix II or Stratix II GX device's internal oscillator. The Stratix II and Stratix II GX devices receive configuration data on the DATA[7..0] pins and the clock is received on the DCLK pin. A byte of data is latched into the device on each rising edge of DCLK.

After the device has received all configuration data successfully, it releases the open-drain CONF_DONE pin which is pulled high by a pull-up resistor. Because CONF_DONE is tied to the configuration device's nCS pin, the configuration device is disabled when CONF_DONE goes high. Enhanced configuration devices have an optional internal pull-up resistor on the nCS pin. This option is available in the Quartus II software from the **General** tab of the **Device & Pin Options** dialog box. If this internal pull-up resistor is not used, an external 10-kΩ pull-up resistor on the nCS-CONF_DONE line is required. A low to high transition on CONF_DONE indicates configuration is complete and initialization of the device can begin.

In Stratix II and Stratix II GX devices, the initialization clock source is either the internal oscillator (typically 10 MHz) or the optional CLKUSR pin. By default, the internal oscillator is the clock source for initialization. If the internal oscillator is used, the Stratix II or Stratix II GX device provides itself with enough clock cycles for proper initialization. You also have the flexibility to synchronize initialization of multiple devices or to delay initialization with the CLKUSR option. The **Enable user-supplied start-up clock** (**CLKUSR**) option can be turned on in the Quartus II software from the **General** tab of the **Device & Pin Options** dialog box. Supplying a clock on CLKUSR will not affect the configuration process. After all configuration data has been accepted and CONF_DONE goes high, CLKUSR will be enabled after the time specified as t_{CD2CU}. After this time period elapses, Stratix II and Stratix II GX devices require 299 clock cycles to initialize properly and enter user mode. Stratix II and Stratix II GX devices support a CLKUSR f_{MAX} of 100 MHz.

An optional INIT_DONE pin is available, which signals the end of initialization and the start of user-mode with a low-to-high transition. The **Enable INIT_DONE Output** option is available in the Quartus II software from the **General** tab of the **Device & Pin Options** dialog box. If the INIT_DONE pin is used, it will be high due to an external 10-kΩ pull-up resistor when nCONFIG is low and during the beginning of configuration. Once the option bit to enable INIT_DONE is programmed into the device (during the first frame of configuration data), the INIT_DONE pin will go low. When initialization is complete, the INIT_DONE pin will be released and pulled high. In user-mode, the user

I/O pins will no longer have weak pull-up resistors and will function as assigned in your design. The enhanced configuration device will drive DCLK low and DATA[7..0] high at the end of configuration.

If an error occurs during configuration, the device drives its nSTATUS pin low, resetting itself internally. Since the nSTATUS pin is tied to OE, the configuration device will also be reset. If the **Auto-restart configuration after error** option (available in the Quartus II software from the **General** tab of the **Device & Pin Options** dialog box) is turned on, the device will automatically initiate reconfiguration if an error occurs. The Stratix II or Stratix II GX device releases its nSTATUS pin after a reset time-out period (maximum of 100 µs). When the nSTATUS pin is released and pulled high by a pull-up resistor, the configuration device reconfigures the chain. If this option is turned off, the external system must monitor nSTATUS for errors and then pulse nCONFIG low for at least 2 µs to restart configuration. The external system can pulse nCONFIG if nCONFIG is under system control rather than tied to V_{CC}.

In addition, if the configuration device sends all of its data and then detects that CONF_DONE has not gone high, it recognizes that the device has not configured successfully. Enhanced configuration devices wait for 64 DCLK cycles after the last configuration bit was sent for CONF_DONE to reach a high state. In this case, the configuration device pulls its OE pin low, which in turn drives the target device's nSTATUS pin low. If the Auto-restart configuration after error option is set in the software, the target device resets and then releases its nSTATUS pin after a reset time-out period (maximum of 100 µs). When nSTATUS returns to a logic high level, the configuration device will try to reconfigure the device.

When CONF_DONE is sensed low after configuration, the configuration device recognizes that the target device has not configured successfully. Therefore, your system should not pull CONF_DONE low to delay initialization. Instead, you should use the CLKUSR option to synchronize the initialization of multiple devices that are not in the same configuration chain. Devices in the same configuration chain will initialize together if their CONF_DONE pins are tied together.



If the optional CLKUSR pin is used and nCONFIG is pulled low to restart configuration during device initialization, ensure CLKUSR continues toggling during the time nSTATUS is low (maximum of 100 µs).

When the device is in user-mode, a reconfiguration can be initiated by pulling the nCONFIG pin low. The nCONFIG pin should be low for at least 2 µs. When nCONFIG is pulled low, the device also pulls nSTATUS and CONF_DONE low and all I/O pins are tri-stated. Because CONF_DONE is

pulled low, this activates the configuration device because it sees its nCS pin drive low. Once nCONFIG returns to a logic high level and nSTATUS is released by the device, reconfiguration begins.

Figure 7–9 shows how to configure multiple Stratix II or Stratix II GX devices with an enhanced configuration device. This circuit is similar to the configuration device circuit for a single device, except the Stratix II or Stratix II GX devices are cascaded for multi-device configuration.

Figure 7–9. Multi-Device FPP Configuration Using an Enhanced Configuration Device

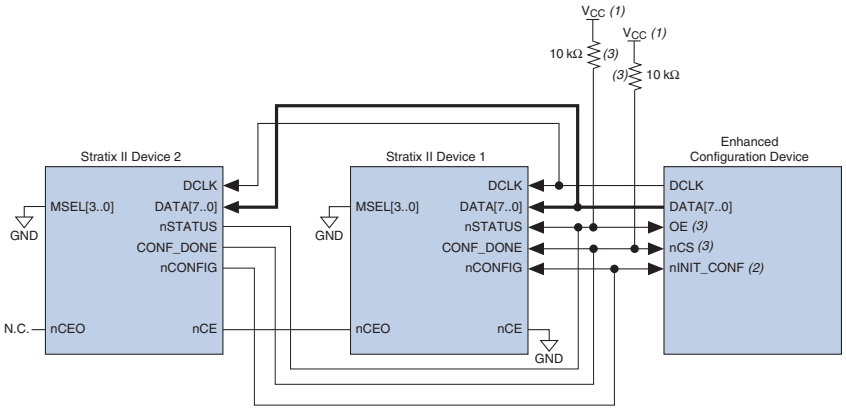

Notes to Figure 7–9:

(1) The pull-up resistor should be connected to the same supply voltage as the configuration device.

(2) The nINIT_CONF pin is available on enhanced configuration devices and has an internal pull-up resistor that is always active. This means an external pull-up resistor should not be used on the nINIT_CONF-nCONFIG line. The nINIT_CONF pin does not need to be connected if its functionality is not used. If nINIT_CONF is not used, nCONFIG must be pulled to V_{CC} either directly or through a resistor.

(3) The enhanced configuration devices' OE and nCS pins have internal programmable pull-up resistors. If internal pull-up resistors are used, external pull-up resistors should not be used on these pins. The internal pull-up resistors are used by default in the Quartus II software. To turn off the internal pull-up resistors, check the **Disable nCS and OE pull-up resistors on configuration device** option when generating programming files.

Enhanced configuration devices cannot be cascaded.

When performing multi-device configuration, you must generate the configuration device's POF from each project's SOF. You can combine multiple SOFs using the **Convert Programming Files** window in the Quartus II software.

For more information on how to create configuration files for multi-device configuration chains, refer to *Software Settings* in volume 2 of the *Configuration Handbook*.

In multi-device FPP configuration, the first device's nCE pin is connected to GND while its nCEO pin is connected to nCE of the next device in the chain. The last device's nCE input comes from the previous device, while its nCEO pin is left floating. After the first device completes configuration in a multi-device configuration chain, its nCEO pin drives low to activate the second device's nCE pin, which prompts the second device to begin configuration. All other configuration pins (nCONFIG, nSTATUS, DCLK, DATA[7..0], and CONF_DONE) are connected to every device in the chain. Pay special attention to the configuration signals because they may require buffering to ensure signal integrity and prevent clock skew problems. Ensure that the DCLK and DATA lines are buffered for every fourth device.

When configuring multiple devices, configuration does not begin until all devices release their OE or nSTATUS pins. Similarly, since all device CONF_DONE pins are tied together, all devices initialize and enter user mode at the same time.

Since all nSTATUS and CONF_DONE pins are tied together, if any device detects an error, configuration stops for the entire chain and the entire chain must be reconfigured. For example, if the first device flags an error on nSTATUS, it resets the chain by pulling its nSTATUS pin low. This low signal drives the OE pin low on the enhanced configuration device and drives nSTATUS low on all devices, which causes them to enter a reset state. This behavior is similar to a single device detecting an error.

If the **Auto-restart configuration after error** option is turned on, the devices will automatically initiate reconfiguration if an error occurs. The devices will release their nSTATUS pins after a reset time-out period (maximum of 100 µs). When all the nSTATUS pins are released and pulled high, the configuration device tries to reconfigure the chain. If the **Auto-restart configuration after error** option is turned off, the external system must monitor nSTATUS for errors and then pulse nCONFIG low for at least 2 µs to restart configuration. The external system can pulse nCONFIG if nCONFIG is under system control rather than tied to V_{CC}.

Your system may have multiple devices that contain the same configuration data. To support this configuration scheme, all device nCE inputs are tied to GND, while nCEO pins are left floating. All other configuration pins (nCONFIG, nSTATUS, DCLK, DATA[7..0], and CONF_DONE) are connected to every device in the chain. Configuration signals may require buffering to ensure signal integrity and prevent clock skew problems. Ensure that the DCLK and DATA lines are buffered for every fourth device. Devices must be the same density and package. All devices will start and complete configuration at the same time. Figure 7–10 shows multi-device FPP configuration when both Stratix II or Stratix II GX devices are receiving the same configuration data.

Figure 7–10. Multiple-Device FPP Configuration Using an Enhanced Configuration Device When Both devices Receive the Same Data

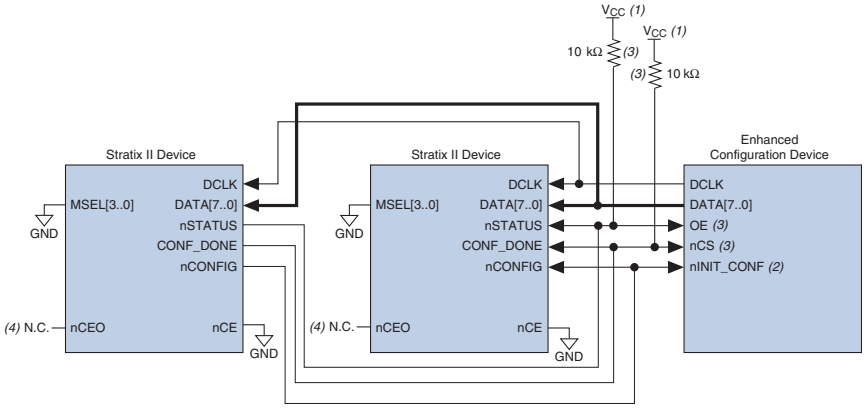

Notes to Figure 7–10:

(1) The pull-up resistor should be connected to the same supply voltage as the configuration device.

(2) The nINIT_CONF pin is available on enhanced configuration devices and has an internal pull-up resistor that is always active. This means an external pull-up resistor should not be used on the nINIT_CONF-nCONFIG line. The nINIT_CONF pin does not need to be connected if its functionality is not used. If nINIT_CONF is not used, nCONFIG must be pulled to V_{CC} either directly or through a resistor.

(3) The enhanced configuration devices' OE and nCS pins have internal programmable pull-up resistors. If internal pull-up resistors are used, external pull-up resistors should not be used on these pins. The internal pull-up resistors are used by default in the Quartus II software. To turn off the internal pull-up resistors, check the **Disable nCS and OE pull-ups on configuration device** option when generating programming files.

(4) The nCEO pins of both devices are left unconnected when configuring the same configuration data into multiple devices.

You can use a single enhanced configuration chain to configure multiple Stratix II or Stratix II GX devices with other Altera devices that support FPP configuration, such as Stratix and Stratix GX devices. To ensure that all devices in the chain complete configuration at the same time or that an error flagged by one device initiates reconfiguration in all devices, all of the device CONF_DONE and nSTATUS pins must be tied together.

For more information on configuring multiple Altera devices in the same configuration chain, refer to *Configuring Mixed Altera FPGA Chains* in the *Configuration Handbook*.

Figure 7–11 shows the timing waveform for the FPP configuration scheme using an enhanced configuration device.

Figure 7–11. Stratix II and Stratix II GX FPP Configuration Using an Enhanced Configuration Device Timing Waveform

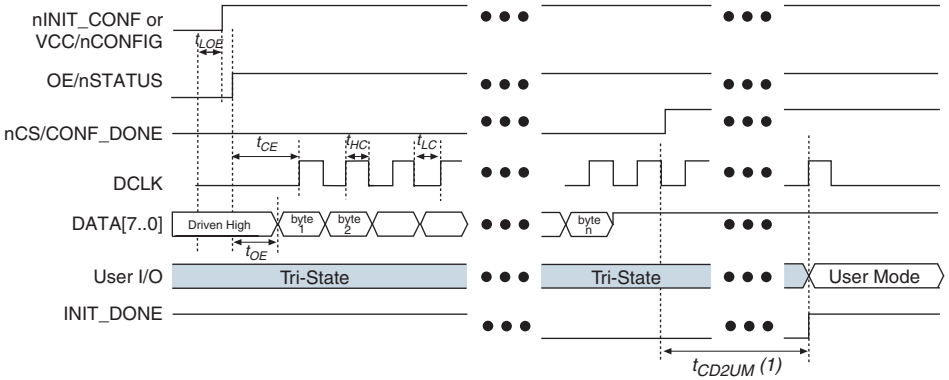

Note to Figure 7–11:
(1) The initialization clock can come from the Stratix II or Stratix II GX device's internal oscillator or the CLKUSR pin.

For timing information, refer to the *Enhanced Configuration Devices (EPC4, EPC8 & EPC16) Data Sheet* in volume 2 of the *Configuration Handbook*.

Device configuration options and how to create configuration files are discussed further in the *Software Settings* section in volume 2 of the *Configuration Handbook*.

Active Serial Configuration (Serial Configuration Devices)

In the AS configuration scheme, Stratix II and Stratix II GX devices are configured using a serial configuration device. These configuration devices are low-cost devices with non-volatile memory that feature a simple four-pin interface and a small form factor. These features make serial configuration devices an ideal low-cost configuration solution.

Note that AS mode is only applicable for 3.3-V configurations. If I/O bank 3 is less than 3.3 V, level shifters are required on the output pins (DCLK, nCSO, ASDO) from the Stratix II or Stratix II GX device back to the EPCS device.

If VCCIO in bank 3 is set to 1.8 V, an external voltage level translator is needed to meet the V_{IH} of the EPCS device (3.3 V).

For more information on serial configuration devices, refer to the *Serial Configuration Devices (EPCS1, EPCS16, EPCS64, and EPCS128) Data Sheet* in volume 2 of the *Configuration Handbook*.

Serial configuration devices provide a serial interface to access configuration data. During device configuration, Stratix II and Stratix II GX devices read configuration data via the serial interface, decompress data if necessary, and configure their SRAM cells. This scheme is referred to as the AS configuration scheme because the device controls the configuration interface. This scheme contrasts with the PS configuration scheme, where the configuration device controls the interface.

The Stratix II and Stratix II GX decompression and design security features are fully available when configuring your Stratix II or Stratix II GX device using AS mode.

Table 7–11 shows the MSEL pin settings when using the AS configuration scheme.

Table 7–11. Stratix II and Stratix II GX MSEL Pin Settings for AS Configuration Schemes *Note (2)*

Configuration Scheme	MSEL3	MSEL2	MSEL1	MSEL0
Fast AS (40 MHz) *(1)*	1	0	0	0
Remote system upgrade fast AS (40 MHz) *(1)*	1	0	0	1
AS (20 MHz) *(1)*	1	1	0	1
Remote system upgrade AS (20 MHz) *(1)*	1	1	1	0

Notes to Table 7–11:

(1) Only the EPCS16 and EPCS64 devices support a DCLK up to 40 MHz clock; other EPCS devices support a DCLK up to 20 MHz. Refer to the *Serial Configuration Devices (EPCS1, EPCS4, EPCS16, EPCS64, and EPCS128) Data Sheet* in volume 2 of the *Configuration Handbook* for more information.

(2) Note that AS mode is only applicable for 3.3-V configuration. If I/O bank 3 is less than 3.3-V, level shifters are required on the output pins (DCLK,nCSO, and ASDO) from the Stratix II or Stratix II GX device back to the EPCS device.

Serial configuration devices have a four-pin interface: serial clock input (DCLK), serial data output (DATA), AS data input (ASDI), and an active-low chip select (nCS). This four-pin interface connects to Stratix II and Stratix II GX device pins, as shown in Figure 7–12.

Figure 7–12. Single Device AS Configuration

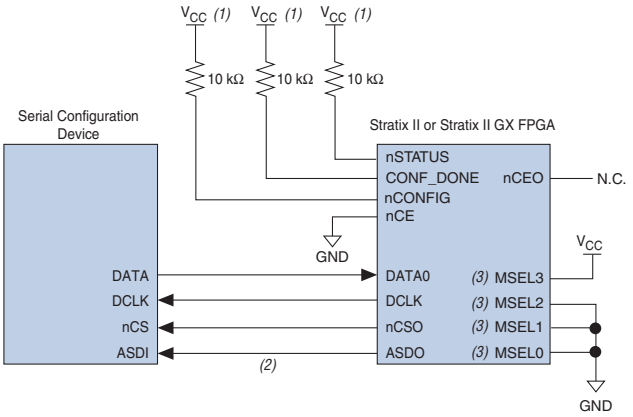

Notes to Figure 7–12:

(1) Connect the pull-up resistors to a 3.3-V supply.

(2) Stratix II and Stratix II GX devices use the ASDO to ASDI path to control the configuration device.

(3) If using an EPCS4 device, MSEL[3..0] should be set to 1101. Refer to Table 7–11 for more details.

Upon power-up, the Stratix II and Stratix II GX devices go through a POR. The POR delay is dependent on the PORSEL pin setting. When PORSEL is driven low, the POR time is approximately 100 ms. If PORSEL is driven high, the POR time is approximately 12 ms. During POR, the device will reset, hold nSTATUS and CONF_DONE low, and tri-state all user I/O pins. Once the device successfully exits POR, all user I/O pins continue to be tri-stated. If nIO_pullup is driven low during power-up and configuration, the user I/O pins and dual-purpose I/O pins will have weak pull-up resistors which are on (after POR) before and during configuration. If nIO_pullup is driven high, the weak pull-up resistors are disabled.

The value of the weak pull-up resistors on the I/O pins that are on before and during configuration can be found in the *DC & Switching Characteristics* chapter in volume 1 of the *Stratix II Device Handbook* and the *DC & Switching Characteristics* chapter in volume 1 of the *Stratix II GX Device Handbook*.

The configuration cycle consists of three stages: reset, configuration and initialization. While nCONFIG or nSTATUS are low, the device is in reset. After POR, the Stratix II and Stratix II GX devices release nSTATUS, which is pulled high by an external 10-kΩ pull-up resistor, and enters configuration mode.



To begin configuration, power the V_{CCINT}, V_{CCIO}, and V_{CCPD} voltages (for the banks where the configuration and JTAG pins reside) to the appropriate voltage levels.

The serial clock (DCLK) generated by the Stratix II and Stratix II GX devices controls the entire configuration cycle and provides the timing for the serial interface. Stratix II and Stratix II GX devices use an internal oscillator to generate DCLK. Using the MSEL[] pins, you can select to use either a 40- or 20-MHz oscillator.



Only the EPCS16 and EPCS64 devices support a DCLK up to 40-MHz clock; other EPCS devices support a DCLK up to 20-MHz. Refer to the *Serial Configuration Devices Data Sheet* for more information. The EPCS4 device only supports the smallest Stratix II (EP2S15) device, which is when the SOF compression is enabled. Because of its insufficient memory capacity, the EPCS1 device does not support any Stratix II devices.

Table 7–12 shows the active serial DCLK output frequencies.

Table 7–12. Active Serial DCLK Output Frequency

Oscillator	Minimum	Typical	Maximum	Units
40 MHz *(1)*	20	26	40	MHz
20 MHz	10	13	20	MHz

Note to Table 7–12:

(1) Only the EPCS16 and EPCS64 devices support a DCLK up to 40-MHz clock; other EPCS devices support a DCLK up to 20-MHz. Refer to the *Serial Configuration Devices (EPCS1, EPCS4, EPCS16, EPCS16, and EPCS128) Data Sheet* chapter in volume 2 of the *Configuration Handbook* for more information.

In both AS and fast AS configuration schemes, the serial configuration device latches input and control signals on the rising edge of DCLK and drives out configuration data on the falling edge. Stratix II and Stratix II GX devices drive out control signals on the falling edge of DCLK and latch configuration data on the falling edge of DCLK.

In configuration mode, Stratix II and Stratix II GX devices enable the serial configuration device by driving the nCSO output pin low, which connects to the chip select (nCS) pin of the configuration device. The Stratix II and Stratix II GX devices use the serial clock (DCLK) and serial data output (ASDO) pins to send operation commands and/or read address signals to the serial configuration device. The configuration device provides data on its serial data output (DATA) pin, which connects to the DATA0 input of the Stratix II and Stratix II GX devices.

After all configuration bits are received by the Stratix II or Stratix II GX device, it releases the open-drain CONF_DONE pin, which is pulled high by an external 10-kΩ resistor. Initialization begins only after the CONF_DONE signal reaches a logic high level. All AS configuration pins, DATA0, DCLK, nCSO, and ASDO, have weak internal pull-up resistors that are always active. After configuration, these pins are set as input tri-stated and are driven high by the weak internal pull-up resistors. The CONF_DONE pin must have an external 10-kΩ pull-up resistor in order for the device to initialize.

In Stratix II and Stratix II GX devices, the initialization clock source is either the 10-MHz (typical) internal oscillator (separate from the active serial internal oscillator) or the optional CLKUSR pin. By default, the internal oscillator is the clock source for initialization. If the internal oscillator is used, the Stratix II or Stratix II GX device provides itself with enough clock cycles for proper initialization. You also have the flexibility to synchronize initialization of multiple devices or to delay initialization with the CLKUSR option. The **Enable user-supplied start-up clock** (**CLKUSR**) option can be turned on in the Quartus II software from the **General** tab of the **Device & Pin Options** dialog box. When you **Enable** the **user supplied start-up clock** option, the CLKUSR pin is the initialization clock source. Supplying a clock on CLKUSR will not affect the configuration process. After all configuration data has been accepted and CONF_DONE goes high, CLKUSR is enabled after 600 ns. After this time period elapses, Stratix II and Stratix II GX devices require 299 clock cycles to initialize properly and enter user mode. Stratix II and Stratix II GX devices support a CLKUSR f_{MAX} of 100 MHz.

An optional INIT_DONE pin is available, which signals the end of initialization and the start of user-mode with a low-to-high transition. The **Enable INIT_DONE Output** option is available in the Quartus II software from the **General** tab of the **Device & Pin Options** dialog box. If the INIT_DONE pin is used, it will be high due to an external 10-kΩ pull-up resistor when nCONFIG is low and during the beginning of configuration. Once the option bit to enable INIT_DONE is programmed into the device (during the first frame of configuration data), the INIT_DONE pin goes low. When initialization is complete, the INIT_DONE pin is released and pulled high. This low-to-high transition signals that the device has entered user mode. When initialization is complete, the device enters user mode. In user mode, the user I/O pins no longer have weak pull-up resistors and function as assigned in your design.

If an error occurs during configuration, Stratix II and Stratix II GX devices assert the nSTATUS signal low, indicating a data frame error, and the CONF_DONE signal stays low. If the **Auto-restart configuration after error** option (available in the Quartus II software from the **General** tab of the

Device & Pin Options dialog box) is turned on, the Stratix II or Stratix II GX device resets the configuration device by pulsing nCSO, releases nSTATUS after a reset time-out period (maximum of 100 µs), and retries configuration. If this option is turned off, the system must monitor nSTATUS for errors and then pulse nCONFIG low for at least 2 µs to restart configuration.

When the Stratix II or Stratix II GX device is in user mode, you can initiate reconfiguration by pulling the nCONFIG pin low. The nCONFIG pin should be low for at least 2 µs. When nCONFIG is pulled low, the device also pulls nSTATUS and CONF_DONE low and all I/O pins are tri-stated. Once nCONFIG returns to a logic high level and nSTATUS is released by the Stratix II or Stratix II GX device, reconfiguration begins.

You can configure multiple Stratix II or Stratix II GX devices using a single serial configuration device. You can cascade multiple Stratix II or Stratix II GX devices using the chip-enable (nCE) and chip-enable-out (nCEO) pins. The first device in the chain must have its nCE pin connected to ground. You must connect its nCEO pin to the nCE pin of the next device in the chain. When the first device captures all of its configuration data from the bit stream, it drives the nCEO pin low, enabling the next device in the chain. You must leave the nCEO pin of the last device unconnected. The nCONFIG, nSTATUS, CONF_DONE, DCLK, and DATA0 pins of each device in the chain are connected (refer to Figure 7–13).

This first Stratix II or Stratix II GX device in the chain is the configuration master and controls configuration of the entire chain. You must connect its MSEL pins to select the AS configuration scheme. The remaining Stratix II or Stratix II GX devices are configuration slaves and you must connect their MSEL pins to select the PS configuration scheme. Any other Altera device that supports PS configuration can also be part of the chain as a configuration slave. Figure 7–13 shows the pin connections for this setup.

Figure 7–13. Multi-Device AS Configuration

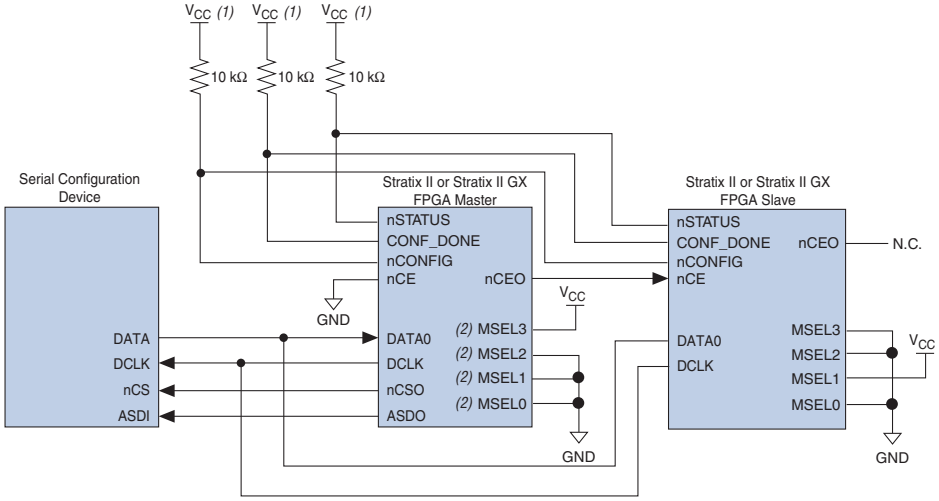

Notes to Figure 7–13:

(1) Connect the pull-up resistors to a 3.3-V supply.

(2) If using an EPCS4 device, `MSEL[3..0]` should be set to 1101. Refer to Table 7–11 for more details.

As shown in Figure 7–13, the nSTATUS and CONF_DONE pins on all target devices are connected together with external pull-up resistors. These pins are open-drain bidirectional pins on the devices. When the first device asserts nCEO (after receiving all of its configuration data), it releases its CONF_DONE pin. But the subsequent devices in the chain keep this shared CONF_DONE line low until they have received their configuration data. When all target devices in the chain have received their configuration data and have released CONF_DONE, the pull-up resistor drives a high level on this line and all devices simultaneously enter initialization mode.

If an error occurs at any point during configuration, the nSTATUS line is driven low by the failing device. If you enable the Auto-restart configuration after error option, reconfiguration of the entire chain begins after a reset time-out period (a maximum of 100 µs). If the **Auto-restart configuration after error** option is turned off, the external system must monitor nSTATUS for errors and then pulse nCONFIG low to restart configuration. The external system can pulse nCONFIG if it is under system control rather than tied to V_{CC}.



While you can cascade Stratix II or Stratix II GX devices, serial configuration devices cannot be cascaded or chained together.

If the configuration bit stream size exceeds the capacity of a serial configuration device, you must select a larger configuration device and/or enable the compression feature. When configuring multiple devices, the size of the bitstream is the sum of the individual devices' configuration bitstreams.

A system may have multiple devices that contain the same configuration data. In active serial chains, this can be implemented by storing two copies of the SOF in the serial configuration device. The first copy would configure the master Stratix II or Stratix II GX device, and the second copy would configure all remaining slave devices concurrently. All slave devices must be the same density and package. The setup is similar to Figure 7–13, where the master is set up in active serial mode and the slave devices are set up in passive serial mode.

To configure four identical Stratix II or Stratix II GX devices with the same SOF, you could set up the chain similar to the example shown in Figure 7–14. The first device is the master device and its MSEL pins should be set to select AS configuration. The other three slave devices are set up for concurrent configuration and its MSEL pins should be set to select PS configuration. The nCEO pin from the master device drives the nCE input pins on all three slave devices, and the DATA and DCLK pins connect in parallel to all four devices. During the first configuration cycle, the master device reads its configuration data from the serial configuration device while holding nCEO high. After completing its configuration cycle, the master drives nCE low and transmits the second copy of the configuration data to all three slave devices, configuring them simultaneously.

Figure 7–14. Multi-Device AS Configuration When devices Receive the Same Data

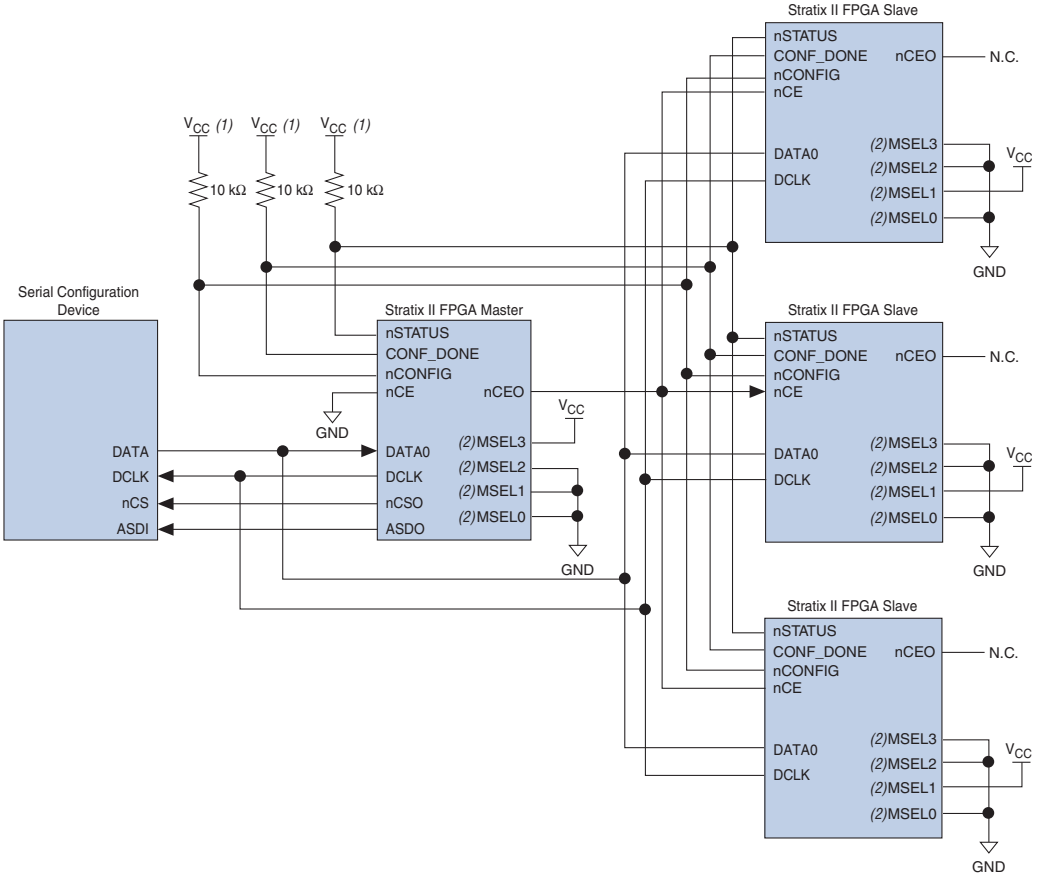

Notes to Figure 7–14:

(1) Connect the pull-up resistors to a 3.3-V supply.

(2) If using an EPCS4 device, `MSEL[3..0]` should be set to 1101. Refer to Table 7–11 for more details.

Estimating Active Serial Configuration Time

Active serial configuration time is dominated by the time it takes to transfer data from the serial configuration device to the Stratix II device. This serial interface is clocked by the Stratix II DCLK output (generated from an internal oscillator). As listed in Table 7–12 on page 7–37, the DCLK minimum frequency when choosing to use the 40-MHz oscillator is 20 MHz (50 ns). Therefore, the maximum configuration time estimate for an EP2S15 device (5 MBits of uncompressed data) is:

RBF Size (minimum DCLK period / 1 bit per DCLK cycle) = estimated maximum configuration time

5 Mbits × (50 ns / 1 bit) = 250 ms

To estimate the typical configuration time, use the typical DCLK period as listed in Table 7–12. With a typical DCLK period of 38.46 ns, the typical configuration time is 192 ms. Enabling compression reduces the amount of configuration data that is transmitted to the Stratix II or Stratix II GX device, which also reduces configuration time. On average, compression reduces configuration time by 50%.

Programming Serial Configuration Devices

Serial configuration devices are non-volatile, flash-memory-based devices. You can program these devices in-system using the USB-Blaster™ or ByteBlaster™ II download cable. Alternatively, you can program them using the Altera Programming Unit (APU), supported third-party programmers, or a microprocessor with the SRunner software driver.

You can perform in-system programming of serial configuration devices via the AS programming interface. During in-system programming, the download cable disables device access to the AS interface by driving the nCE pin high. Stratix II and Stratix II GX devices are also held in reset by a low level on nCONFIG. After programming is complete, the download cable releases nCE and nCONFIG, allowing the pull-down and pull-up resistors to drive GND and V_{CC}, respectively. Figure 7–15 shows the download cable connections to the serial configuration device.



For more information on the USB Blaster download cable, refer to the *USB-Blaster Download Cable User Guide*. For more information on the ByteBlaster II cable, refer to the *ByteBlaster II Download Cable User Guide*.

Figure 7–15. In-System Programming of Serial Configuration Devices

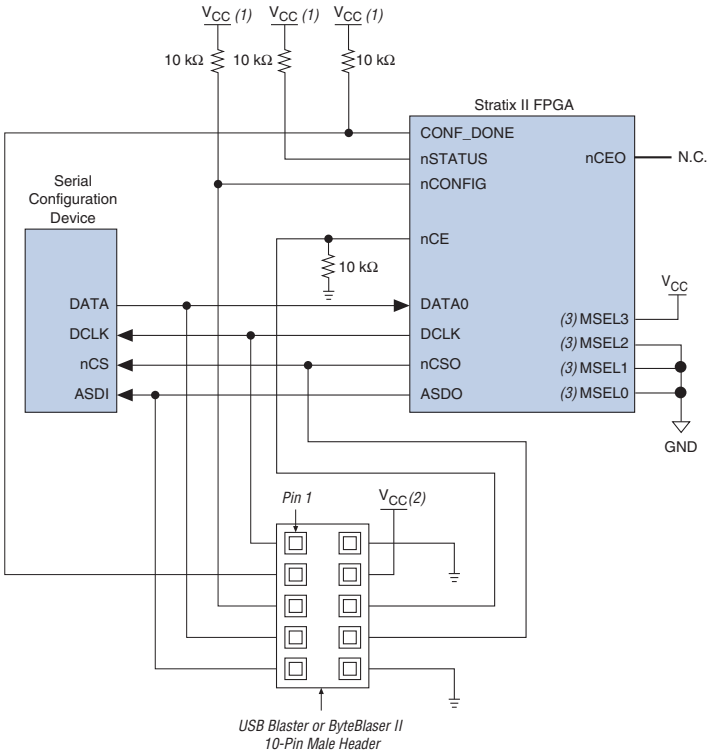

Notes to Figure 7–15:

(1) Connect these pull-up resistors to 3.3-V supply.

(2) Power up the ByteBlaster II cable's V_{CC} with a 3.3-V supply.

(3) If using an EPCS4 device, `MSEL[3..0]` should be set to `1101`. Refer to Table 7–11 for more details.

You can program serial configuration devices with the Quartus II software with the Altera programming hardware (APU) and the appropriate configuration device programming adapter. The EPCS1 and EPCS4 devices are offered in an eight-pin small outline integrated circuit (SOIC) package.

In production environments, serial configuration devices can be programmed using multiple methods. Altera programming hardware or other third-party programming hardware can be used to program blank serial configuration devices before they are mounted onto printed circuit boards (PCBs). Alternatively, you can use an on-board microprocessor to program the serial configuration device in-system using C-based software drivers provided by Altera.

A serial configuration device can be programmed in-system by an external microprocessor using SRunner. SRunner is a software driver developed for embedded serial configuration device programming, which can be easily customized to fit in different embedded systems. SRunner is able to read a raw programming data (.**rpd**) file and write to the serial configuration devices. The serial configuration device programming time using SRunner is comparable to the programming time with the Quartus II software.

For more information about SRunner, refer to *AN 418: SRunner: An Embedded Solution for Serial Configuration Device Programming* and the source code on the Altera web site at www.altera.com.

For more information on programming serial configuration devices, refer to the *Serial Configuration Devices (EPCS1, EPCS4, EPCS16, EPCS64, and EPCS128) Data Sheet* in the *Configuration Handbook*.

Figure 7–16 shows the timing waveform for the AS configuration scheme using a serial configuration device.

Figure 7–16. AS Configuration Timing

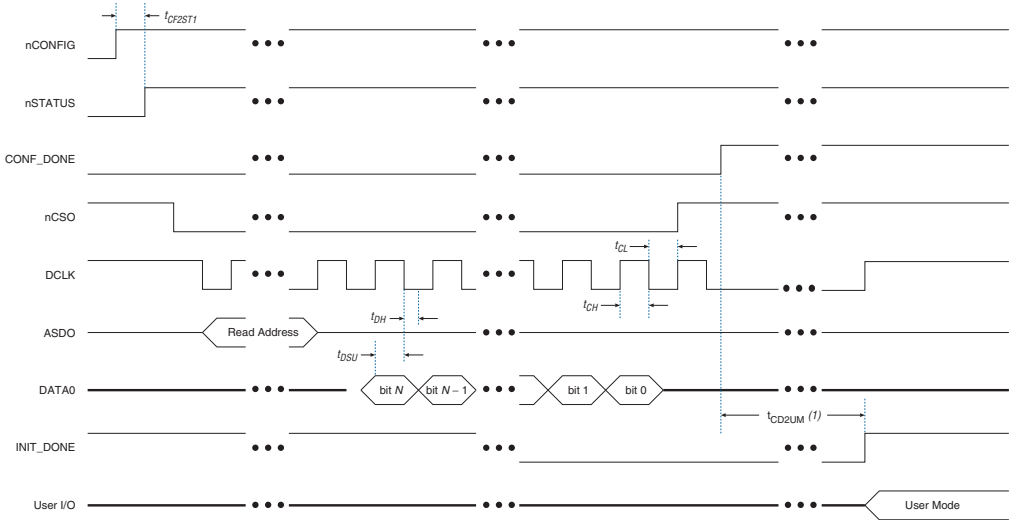

Note to Figure 7–16:

(1) The initialization clock can come from the Stratix II or Stratix II GX device's internal oscillator or the CLKUSR pin.

Table 7–13 shows the AS timing parameters for Stratix II devices.

Table 7–13. AS Timing Parameters for Stratix II Devices

Symbol	Parameter	Condition	Minimum	Typical	Maximum
t_{CF2ST1}	nCONFIG high to nSTATUS high				100
t_{DSU}	Data setup time before falling edge on DCLK		7		
t_{DH}	Data hold time after falling edge on DCLK		0		
t_{CH}	DCLK high time		10		
t_{CL}	DCLK low time		10		
t_{CD2UM}	CONF_DONE high to user mode		20		100

Passive Serial Configuration

PS configuration of Stratix II and Stratix II GX devices can be performed using an intelligent host, such as a MAX II device or microprocessor with flash memory, an Altera configuration device, or a download cable. In the PS scheme, an external host (MAX II device, embedded processor, configuration device, or host PC) controls configuration. Configuration data is clocked into the target Stratix II or Stratix II GX device via the DATA0 pin at each rising edge of DCLK.



The Stratix II and Stratix II GX decompression and design security features are fully available when configuring your Stratix II or Stratix II GX device using PS mode.

Table 7–14 shows the MSEL pin settings when using the PS configuration scheme.

Table 7–14. Stratix II and Stratix II GX MSEL Pin Settings for PS Configuration Schemes

Configuration Scheme	MSEL3	MSEL2	MSEL1	MSEL0
PS	0	0	1	0
PS when using Remote System Upgrade *(1)*	0	1	1	0

Note to Table 7–14:

(1) This scheme requires that you drive the RUnLU pin to specify either remote update or local update. For more information about remote system upgrade in Stratix II devices, refer to the *Remote System Upgrades With Stratix II & Stratix II GX Devices* chapter in volume 2 of the *Stratix II Device Handbook* or the *Remote System Upgrades With Stratix II & Stratix II GX Devices* chapter in volume 2 of the *Stratix II GX Device Handbook*.

PS Configuration Using a MAX II Device as an External Host

In the PS configuration scheme, a MAX II device can be used as an intelligent host that controls the transfer of configuration data from a storage device, such as flash memory, to the target Stratix II or Stratix II GX device. Configuration data can be stored in RBF, HEX, or TTF format. Figure 7–17 shows the configuration interface connections between a Stratix II or Stratix II GX device and a MAX II device for single device configuration.

Figure 7–17. Single Device PS Configuration Using an External Host

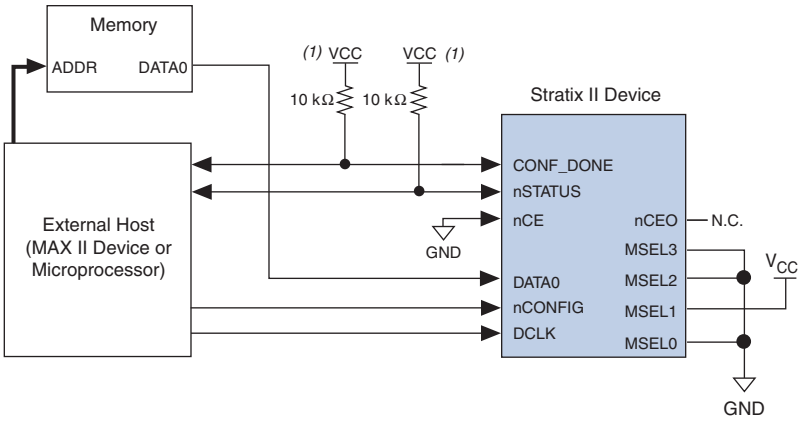

Note to Figure 7–17:

(1) Connect the pull-up resistor to a supply that provides an acceptable input signal for the device. V_{CC} should be high enough to meet the V_{IH} specification of the I/O on the device and the external host.

Upon power-up, Stratix II and Stratix II GX devices go through a POR. The POR delay is dependent on the PORSEL pin setting; when PORSEL is driven low, the POR time is approximately 100 ms, if PORSEL is driven high, the POR time is approximately 12 ms. During POR, the device resets, holds nSTATUS low, and tri-states all user I/O pins. Once the device successfully exits POR, all user I/O pins continue to be tri-stated. If nIO_pullup is driven low during power-up and configuration, the user I/O pins and dual-purpose I/O pins will have weak pull-up resistors which are on (after POR) before and during configuration. If nIO_pullup is driven high, the weak pull-up resistors are disabled.



You can hold nConfig low in order to stop device configuration.

The value of the weak pull-up resistors on the I/O pins that are on before and during configuration can be found in the *Stratix II Device Handbook* or the *Stratix II GX Device Handbook*.

The configuration cycle consists of three stages: reset, configuration, and initialization. While nCONFIG or nSTATUS are low, the device is in reset. To initiate configuration, the MAX II device must generate a low-to-high transition on the nCONFIG pin.

V_{CCINT}, V_{CCIO}, and V_{CCPD} of the banks where the configuration and JTAG pins reside need to be fully powered to the appropriate voltage levels in order to begin the configuration process.

When nCONFIG goes high, the device comes out of reset and releases the open-drain nSTATUS pin, which is then pulled high by an external 10-kΩ pull-up resistor. Once nSTATUS is released, the device is ready to receive configuration data and the configuration stage begins. When nSTATUS is pulled high, the MAX II device should place the configuration data one bit at a time on the DATA0 pin. If you are using configuration data in RBF, HEX, or TTF format, you must send the least significant bit (LSB) of each data byte first. For example, if the RBF contains the byte sequence `02 1B EE 01 FA`, the serial bitstream you should transmit to the device is `0100-0000 1101-1000 0111-0111 1000-0000 0101-1111`.

The Stratix II and Stratix II GX devices receive configuration data on the DATA0 pin and the clock is received on the DCLK pin. Data is latched into the device on the rising edge of DCLK. Data is continuously clocked into the target device until CONF_DONE goes high. After the device has received all configuration data successfully, it releases the open-drain CONF_DONE pin, which is pulled high by an external 10-kΩ pull-up resistor. A low-to-high transition on CONF_DONE indicates configuration is complete and initialization of the device can begin. The CONF_DONE pin must have an external 10-kΩ pull-up resistor in order for the device to initialize.

In Stratix II and Stratix II GX devices, the initialization clock source is either the internal oscillator (typically 10 MHz) or the optional CLKUSR pin. By default, the internal oscillator is the clock source for initialization. If the internal oscillator is used, the Stratix II or Stratix II GX device provides itself with enough clock cycles for proper initialization. Therefore, if the internal oscillator is the initialization clock source, sending the entire configuration file to the device is sufficient to configure and initialize the device. Driving DCLK to the device after configuration is complete does not affect device operation.

You also have the flexibility to synchronize initialization of multiple devices or to delay initialization with the CLKUSR option. The **Enable user-supplied start-up clock** (**CLKUSR**) option can be turned on in the Quartus II software from the **General** tab of the **Device & Pin Options** dialog box. Supplying a clock on CLKUSR will not affect the configuration process. After all configuration data has been accepted and CONF_DONE goes high, CLKUSR will be enabled after the time specified as t_{CD2CU}. After this time period elapses, Stratix II and Stratix II GX devices require 299 clock cycles to initialize properly and enter user mode. Stratix II and Stratix II GX devices support a CLKUSR f_{MAX} of 100 MHz.

An optional INIT_DONE pin is available, which signals the end of initialization and the start of user-mode with a low-to-high transition. The **Enable INIT_DONE Output** option is available in the Quartus II software from the **General** tab of the **Device & Pin Options** dialog box. If the INIT_DONE pin is used it will be high due to an external 10-kΩ pull-up resistor when nCONFIG is low and during the beginning of configuration. Once the option bit to enable INIT_DONE is programmed into the device (during the first frame of configuration data), the INIT_DONE pin will go low. When initialization is complete, the INIT_DONE pin will be released and pulled high. The MAX II device must be able to detect this low-to-high transition which signals the device has entered user mode. When initialization is complete, the device enters user mode. In user-mode, the user I/O pins will no longer have weak pull-up resistors and will function as assigned in your design.

To ensure DCLK and DATA0 are not left floating at the end of configuration, the MAX II device must drive them either high or low, whichever is convenient on your board. The DATA[0] pin is available as a user I/O pin after configuration. When the PS scheme is chosen in the Quartus II software, as a default this I/O pin is tri-stated in user mode and should be driven by the MAX II device. To change this default option in the Quartus II software, select the **Dual-Purpose Pins** tab of the **Device & Pin Options** dialog box.

The configuration clock (DCLK) speed must be below the specified frequency to ensure correct configuration. No maximum DCLK period exists, which means you can pause configuration by halting DCLK for an indefinite amount of time.

If an error occurs during configuration, the device drives its nSTATUS pin low, resetting itself internally. The low signal on the nSTATUS pin also alerts the MAX II device that there is an error. If the **Auto-restart configuration after error** option (available in the Quartus II software from the **General** tab of the **Device & Pin Options** dialog box) is turned on, the Stratix II or Stratix II GX device releases nSTATUS after a reset time-out period (maximum of 100 µs). After nSTATUS is released and

pulled high by a pull-up resistor, the MAX II device can try to reconfigure the target device without needing to pulse nCONFIG low. If this option is turned off, the MAX II device must generate a low-to-high transition (with a low pulse of at least 2 µs) on nCONFIG to restart the configuration process.

The MAX II device can also monitor the CONF_DONE and INIT_DONE pins to ensure successful configuration. The CONF_DONE pin must be monitored by the MAX II device to detect errors and determine when programming completes. If all configuration data is sent, but CONF_DONE or INIT_DONE have not gone high, the MAX II device must reconfigure the target device.



If the optional CLKUSR pin is being used and nCONFIG is pulled low to restart configuration during device initialization, you need to ensure that CLKUSR continues toggling during the time nSTATUS is low (maximum of 100 µs).

When the device is in user-mode, you can initiate a reconfiguration by transitioning the nCONFIG pin low-to-high. The nCONFIG pin must be low for at least 2 µs. When nCONFIG is pulled low, the device also pulls nSTATUS and CONF_DONE low and all I/O pins are tri-stated. Once nCONFIG returns to a logic high level and nSTATUS is released by the device, reconfiguration begins.

Figure 7–18 shows how to configure multiple devices using a MAX II device. This circuit is similar to the PS configuration circuit for a single device, except Stratix II or Stratix II GX devices are cascaded for multi-device configuration.

Figure 7–18. Multi-Device PS Configuration Using an External Host

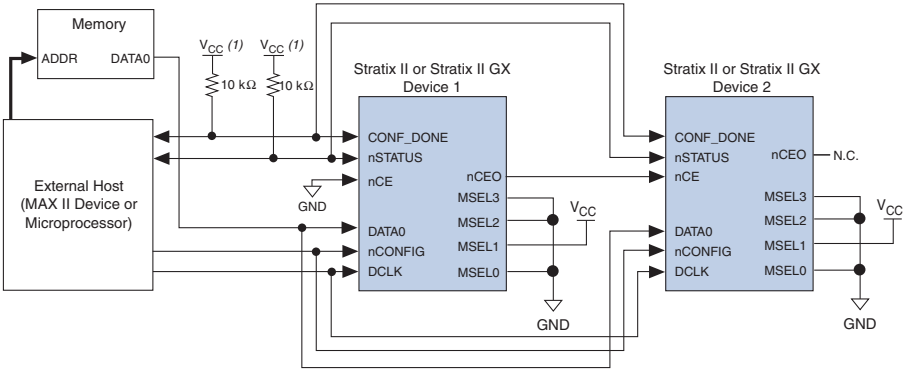

Note to Figure 7–18:

(1) The pull-up resistor should be connected to a supply that provides an acceptable input signal for all devices in the chain. V_{CC} should be high enough to meet the V_{IH} specification of the I/O on the device and the external host.

In multi-device PS configuration the first device's nCE pin is connected to GND while its nCEO pin is connected to nCE of the next device in the chain. The last device's nCE input comes from the previous device, while its nCEO pin is left floating. After the first device completes configuration in a multi-device configuration chain, its nCEO pin drives low to activate the second device's nCE pin, which prompts the second device to begin configuration. The second device in the chain begins configuration within one clock cycle. Therefore, the transfer of data destinations is transparent to the MAX II device. All other configuration pins (nCONFIG, nSTATUS, DCLK, DATA0, and CONF_DONE) are connected to every device in the chain. Configuration signals can require buffering to ensure signal integrity and prevent clock skew problems. Ensure that the DCLK and DATA lines are buffered for every fourth device. Because all device CONF_DONE pins are tied together, all devices initialize and enter user mode at the same time.

Since all nSTATUS and CONF_DONE pins are tied together, if any device detects an error, configuration stops for the entire chain and the entire chain must be reconfigured. For example, if the first device flags an error on nSTATUS, it resets the chain by pulling its nSTATUS pin low. This behavior is similar to a single device detecting an error.

If the **Auto-restart configuration after error** option is turned on, the devices release their nSTATUS pins after a reset time-out period (maximum of 100 µs). After all nSTATUS pins are released and pulled high, the MAX II device can try to reconfigure the chain without needing to pulse nCONFIG low. If this option is turned off, the MAX II device must generate a low-to-high transition (with a low pulse of at least 2 µs) on nCONFIG to restart the configuration process.

In your system, you can have multiple devices that contain the same configuration data. To support this configuration scheme, all device nCE inputs are tied to GND, while nCEO pins are left floating. All other configuration pins (nCONFIG, nSTATUS, DCLK, DATA0, and CONF_DONE) are connected to every device in the chain. Configuration signals can require buffering to ensure signal integrity and prevent clock skew problems. Ensure that the DCLK and DATA lines are buffered for every fourth device. Devices must be the same density and package. All devices will start and complete configuration at the same time. Figure 7–19 shows multi-device PS configuration when both Stratix II or Stratix II GX devices are receiving the same configuration data.

Figure 7–19. Multiple-Device PS Configuration When Both devices Receive the Same Data

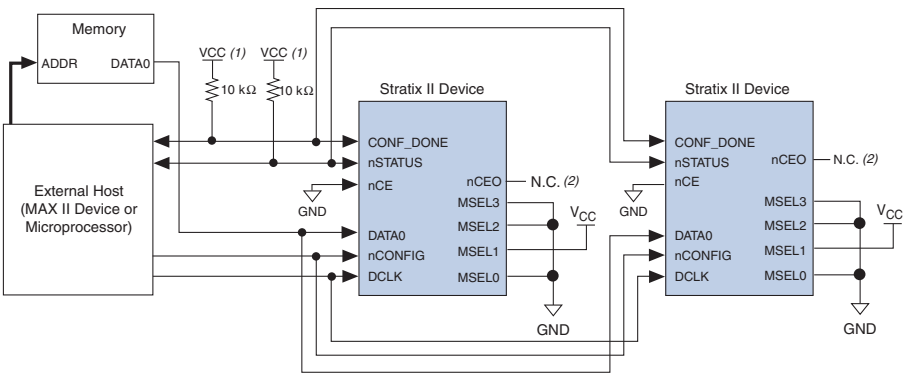

Notes to Figure 7–19:

(1) The pull-up resistor should be connected to a supply that provides an acceptable input signal for all devices in the chain. V_{CC} should be high enough to meet the V_{IH} specification of the I/O on the device and the external host.

(2) The nCEO pins of both devices are left unconnected when configuring the same configuration data into multiple devices.

You can use a single configuration chain to configure Stratix II or Stratix II GX devices with other Altera devices. To ensure that all devices in the chain complete configuration at the same time or that an error flagged by one device initiates reconfiguration in all devices, all of the device CONF_DONE and nSTATUS pins must be tied together.

For more information on configuring multiple Altera devices in the same configuration chain, refer to the *Configuring Mixed Altera FPGA Chains* chapter in volume 2 of the *Configuration Handbook*.

PS Configuration Timing

Figure 7–20 shows the timing waveform for PS configuration when using a MAX II device as an external host.

Figure 7–20. PS Configuration Timing Waveform *Note (1)*

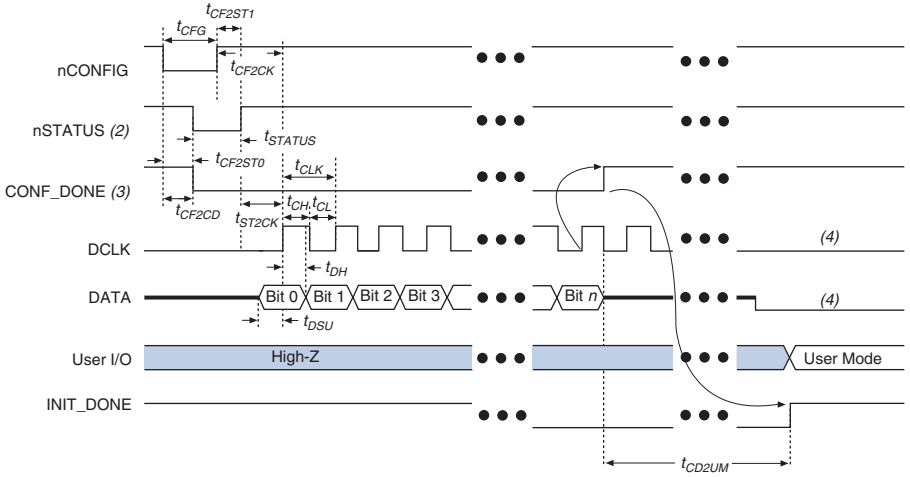

Notes to Figure 7–20:

(1) The beginning of this waveform shows the device in user-mode. In user-mode, nCONFIG, nSTATUS and CONF_DONE are at logic high levels. When nCONFIG is pulled low, a reconfiguration cycle begins.
(2) Upon power-up, the Stratix II or Stratix II GX device holds nSTATUS low for the time of the POR delay.
(3) Upon power-up, before and during configuration, CONF_DONE is low.
(4) DCLK should not be left floating after configuration. It should be driven high or low, whichever is more convenient. DATA[0] is available as a user I/O pin after configuration and the state of this pin depends on the dual-purpose pin settings.

Table 7–15 defines the timing parameters for Stratix II and Stratix II GX devices for PS configuration.

Table 7–15. PS Timing Parameters for Stratix II and Stratix II GX Devices (Part 1 of 2)

Symbol	Parameter	Min	Max	Units
t_{CF2CD}	nCONFIG low to CONF_DONE low		800	ns
t_{CF2ST0}	nCONFIG low to nSTATUS low		800	ns

Table 7–15. PS Timing Parameters for Stratix II and Stratix II GX Devices (Part 2 of 2)

Symbol	Parameter	Min	Max	Units
t_{CFG}	nCONFIG low pulse width	2		µs
t_{STATUS}	nSTATUS low pulse width	10	100 *(1)*	µs
t_{CF2ST1}	nCONFIG high to nSTATUS high		100 *(1)*	µs
t_{CF2CK}	nCONFIG high to first rising edge on DCLK	100		µs
t_{ST2CK}	nSTATUS high to first rising edge of DCLK	2		µs
t_{DSU}	Data setup time before rising edge on DCLK	5		ns
t_{DH}	Data hold time after rising edge on DCLK	0		ns
t_{CH}	DCLK high time	4		ns
t_{CL}	DCLK low time	4		ns
t_{CLK}	DCLK period	10		ns
f_{MAX}	DCLK frequency		100	MHz
t_R	Input rise time		40	ns
t_F	Input fall time		40	ns
t_{CD2UM}	CONF_DONE high to user mode *(2)*	20	100	µs
t_{CD2CU}	CONF_DONE high to CLKUSR enabled	4 × maximum DCLK period		
t_{CD2UMC}	CONF_DONE high to user mode with CLKUSR option on	t_{CD2CU} + (299 × CLKUSR period)		

Notes to Table 7–15:

(1) This value is applicable if users do not delay configuration by extending the nCONFIG or nSTATUS low pulse width.

(2) The minimum and maximum numbers apply only if the internal oscillator is chosen as the clock source for starting the device.



Device configuration options and how to create configuration files are discussed further in *Software Settings* in volume 2 of the *Configuration Handbook*.

An example PS design that uses a MAX II device as the external host for configuration will be available when devices are available.

PS Configuration Using a Microprocessor

In the PS configuration scheme, a microprocessor can control the transfer of configuration data from a storage device, such as flash memory, to the target Stratix II or Stratix II GX device.



All information in the "PS Configuration Using a MAX II Device as an External Host" section is also applicable when using a microprocessor as an external host. Refer to that section for all configuration and timing information.

PS Configuration Using a Configuration Device

You can use an Altera configuration device, such as an enhanced configuration device, to configure Stratix II and Stratix II GX devices using a serial configuration bitstream. Configuration data is stored in the configuration device. Figure 7–21 shows the configuration interface connections between a Stratix II or Stratix II GX device and a configuration device.



The figures in this chapter only show the configuration-related pins and the configuration pin connections between the configuration device and the device.



For more information on the enhanced configuration device and flash interface pins (such as `PGM[2..0]`, `EXCLK`, `PORSEL`, `A[20..0]`, and `DQ[15..0]`), refer to the *Enhanced Configuration Devices (EPC4, EPC8, EPC16, EPCS64, and EPCS128) Data Sheet* chapter in volume 2 of the *Configuration Handbook*.

Figure 7–21. Single Device PS Configuration Using an Enhanced Configuration Device

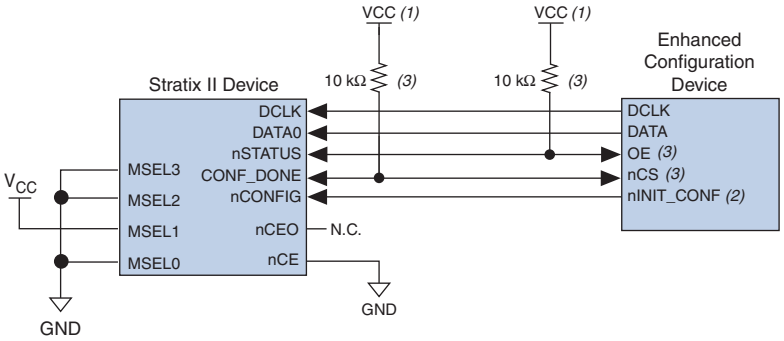

Notes to Figure 7–21:

(1) The pull-up resistor should be connected to the same supply voltage as the configuration device.

(2) The nINIT_CONF pin is available on enhanced configuration devices and has an internal pull-up resistor that is always active, meaning an external pull-up resistor should not be used on the nINIT_CONF-nCONFIG line. The nINIT_CONF pin does not need to be connected if its functionality is not used. If nINIT_CONF is not used, nCONFIG must be pulled to V_{CC} either directly or through a resistor.

(3) The enhanced configuration devices' OE and nCS pins have internal programmable pull-up resistors. If internal pull-up resistors are used, external pull-up resistors should not be used on these pins. The internal pull-up resistors are used by default in the Quartus II software. To turn off the internal pull-up resistors, check the **Disable nCS and OE pull-ups on configuration device** option when generating programming files.

The value of the internal pull-up resistors on the enhanced configuration devices can be found in the Operating Conditions table of the *Enhanced Configuration Devices (EPC4, EPC8, & EPC16) Data Sheet* chapter in volume 2 of the *Configuration Handbook* or the *Configuration Devices for SRAM-based LUT Devices Data Sheet* chapter in volume 2 of the *Configuration Handbook*.

When using enhanced configuration devices, nCONFIG of the device can be connected to nINIT_CONF of the configuration device, which allows the INIT_CONF JTAG instruction to initiate device configuration. The nINIT_CONF pin does not need to be connected if its functionality is not used. An internal pull-up resistor on the nINIT_CONF pin is always active in enhanced configuration devices, which means an external pull-up resistor should not be used if nCONFIG is tied to nINIT_CONF.

Upon power-up, the Stratix II and Stratix II GX devices go through a POR. The POR delay is dependent on the PORSEL pin setting. When PORSEL is driven low, the POR time is approximately 100 ms. If PORSEL is driven high, the POR time is approximately 12 ms. During POR, the device will reset, hold nSTATUS low, and tri-state all user I/O pins. The configuration device also goes through a POR delay to allow the power supply to stabilize. The POR time for EPC2 devices is 200 ms (maximum). The POR time for enhanced configuration devices can be set to either

100 ms or 2 ms, depending on its PORSEL pin setting. If the PORSEL pin is connected to GND, the POR delay is 100 ms. If the PORSEL pin is connected to V_{CC}, the POR delay is 2 ms. During this time, the configuration device drives its OE pin low. This low signal delays configuration because the OE pin is connected to the target device's nSTATUS pin.



When selecting a POR time, you need to ensure that the device completes power-up before the enhanced configuration device exits POR. Altera recommends that you choose a POR time for the Stratix II or Stratix II GX device of 12 ms, while selecting a POR time for the enhanced configuration device of 100 ms.

When both devices complete POR, they release their open-drain OE or nSTATUS pin, which is then pulled high by a pull-up resistor. Once the device successfully exits POR, all user I/O pins continue to be tri-stated. If nIO_pullup is driven low during power-up and configuration, the user I/O pins and dual-purpose I/O pins will have weak pull-up resistors which are on (after POR) before and during configuration. If nIO_pullup is driven high, the weak pull-up resistors are disabled.



The value of the weak pull-up resistors on the I/O pins that are on before and during configuration can be found in the *DC & Switching Characteristics* chapter in volume 2 of the *Stratix II Device Handbook* or the *DC & Switching Characteristics* chapter in volume 2 of the *Stratix II GX Device Handbook*.

When the power supplies have reached the appropriate operating voltages, the target device senses the low-to-high transition on nCONFIG and initiates the configuration cycle. The configuration cycle consists of three stages: reset, configuration, and initialization. While nCONFIG or nSTATUS are low, the device is in reset. The beginning of configuration can be delayed by holding the nCONFIG or nSTATUS pin low.



To begin configuration, power the V_{CCINT}, V_{CCIO}, and V_{CCPD} voltages (for the banks where the configuration and JTAG pins reside) to the appropriate voltage levels.

When nCONFIG goes high, the device comes out of reset and releases the nSTATUS pin, which is pulled high by a pull-up resistor. Enhanced configuration and EPC2 devices have an optional internal pull-up resistor on the OE pin. This option is available in the Quartus II software from the **General** tab of the **Device & Pin Options** dialog box. If this internal pull-up resistor is not used, an external 10-kΩ pull-up resistor on the OE-nSTATUS line is required. Once nSTATUS is released, the device is ready to receive configuration data and the configuration stage begins.

When nSTATUS is pulled high, OE of the configuration device also goes high and the configuration device clocks data out serially to the device using the Stratix II or Stratix II GX device's internal oscillator. The Stratix II and Stratix II GX devices receive configuration data on the DATA0 pin and the clock is received on the DCLK pin. Data is latched into the device on the rising edge of DCLK.

After the device has received all configuration data successfully, it releases the open-drain CONF_DONE pin, which is pulled high by a pull-up resistor. Since CONF_DONE is tied to the configuration device's nCS pin, the configuration device is disabled when CONF_DONE goes high. Enhanced configuration and EPC2 devices have an optional internal pull-up resistor on the nCS pin. This option is available in the Quartus II software from the **General** tab of the **Device & Pin Options** dialog box. If this internal pull-up resistor is not used, an external 10-kΩ pull-up resistor on the nCS-CONF_DONE line is required. A low-to-high transition on CONF_DONE indicates configuration is complete and initialization of the device can begin.

In Stratix II and Stratix II GX devices, the initialization clock source is either the internal oscillator (typically 10 MHz) or the optional CLKUSR pin. By default, the internal oscillator is the clock source for initialization. If you are using internal oscillator, the Stratix II or Stratix II GX device supplies itself with enough clock cycles for proper initialization. You also have the flexibility to synchronize initialization of multiple devices or to delay initialization with the CLKUSR option. You can turn on the **Enable user-supplied start-up clock** (**CLKUSR**) option in the Quartus II software from the **General** tab of the **Device & Pin Options** dialog box. Supplying a clock on CLKUSR will not affect the configuration process. After all configuration data has been accepted and CONF_DONE goes high, CLKUSR will be enabled after the time specified as t_{CD2CU}. After this time period elapses, the Stratix II and Stratix II GX devices require 299 clock cycles to initialize properly and enter user mode. Stratix II and Stratix II GX devices support a CLKUSR f_{MAX} of 100 MHz.

An optional INIT_DONE pin is available, which signals the end of initialization and the start of user-mode with a low-to-high transition. The **Enable INIT_DONE Output** option is available in the Quartus II software from the **General** tab of the **Device & Pin Options** dialog box. If you are using the INIT_DONE pin, it will be high due to an external 10-kΩ pull-up resistor when nCONFIG is low and during the beginning of configuration. Once the option bit to enable INIT_DONE is programmed into the device (during the first frame of configuration data), the INIT_DONE pin goes low. When initialization is complete, the INIT_DONE pin is released and pulled high. This low-to-high transition signals that the device has entered user mode. In user-mode, the user I/O

pins will no longer have weak pull-up resistors and will function as assigned in your design. Enhanced configuration devices and EPC2 devices drive DCLK low and DATA0 high at the end of configuration.

If an error occurs during configuration, the device drives its nSTATUS pin low, resetting itself internally. Since the nSTATUS pin is tied to OE, the configuration device will also be reset. If the **Auto-restart configuration after error** option, available in the Quartus II software, from the **General** tab of the **Device & Pin Options** dialog box is turned on, the device automatically initiates reconfiguration if an error occurs. The Stratix II and Stratix II GX devices release the nSTATUS pin after a reset time-out period (maximum of 100 µs). When the nSTATUS pin is released and pulled high by a pull-up resistor, the configuration device reconfigures the chain. If this option is turned off, the external system must monitor nSTATUS for errors and then pulse nCONFIG low for at least 2 µs to restart configuration. The external system can pulse nCONFIG if nCONFIG is under system control rather than tied to V_{CC}.

In addition, if the configuration device sends all of its data and then detects that CONF_DONE has not gone high, it recognizes that the device has not configured successfully. Enhanced configuration devices wait for 64 DCLK cycles after the last configuration bit was sent for CONF_DONE to reach a high state. EPC2 devices wait for 16 DCLK cycles. In this case, the configuration device pulls its OE pin low, driving the target device's nSTATUS pin low. If the **Auto-restart configuration after error** option is set in the software, the target device resets and then releases its nSTATUS pin after a reset time-out period (maximum of 100 µs). When nSTATUS returns to a logic high level, the configuration device tries to reconfigure the device.

When CONF_DONE is sensed low after configuration, the configuration device recognizes that the target device has not configured successfully. Therefore, your system should not pull CONF_DONE low to delay initialization. Instead, use the CLKUSR option to synchronize the initialization of multiple devices that are not in the same configuration chain. Devices in the same configuration chain will initialize together if their CONF_DONE pins are tied together.



If you are using the optional CLKUSR pin and nCONFIG is pulled low to restart configuration during device initialization, you need to ensure that CLKUSR continues toggling during the time nSTATUS is low (maximum of 100 µs).

When the device is in user-mode, pulling the nCONFIG pin low initiates a reconfiguration. The nCONFIG pin should be low for at least 2 µs. When nCONFIG is pulled low, the device also pulls nSTATUS and CONF_DONE low and all I/O pins are tri-stated. Because CONF_DONE is pulled low, this

activates the configuration device because it sees its nCS pin drive low. Once nCONFIG returns to a logic high level and nSTATUS is released by the device, reconfiguration begins.

Figure 7–22 shows how to configure multiple devices with an enhanced configuration device. This circuit is similar to the configuration device circuit for a single device, except Stratix II or Stratix II GX devices are cascaded for multi-device configuration.

Figure 7–22. Multi-Device PS Configuration Using an Enhanced Configuration Device

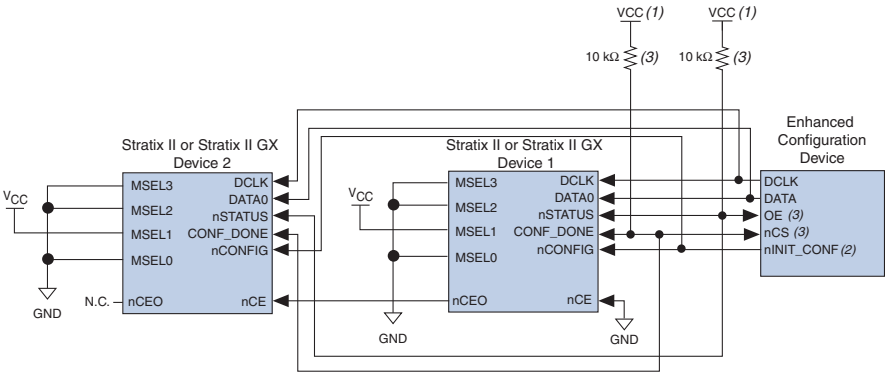

Notes to Figure 7–22:

(1) The pull-up resistor should be connected to the same supply voltage as the configuration device.

(2) The nINIT_CONF pin is available on enhanced configuration devices and has an internal pull-up resistor that is always active, meaning an external pull-up resistor should not be used on the nINIT_CONF-nCONFIG line. The nINIT_CONF pin does not need to be connected if its functionality is not used. If nINIT_CONF is not used, nCONFIG must be pulled to V_{CC} either directly or through a resistor.

(3) The enhanced configuration devices' OE and nCS pins have internal programmable pull-up resistors. If internal pull-up resistors are used, external pull-up resistors should not be used on these pins. The internal pull-up resistors are used by default in the Quartus II software. To turn off the internal pull-up resistors, check the **Disable nCS and OE pull-ups on configuration device** option when generating programming files.

Enhanced configuration devices cannot be cascaded.

When performing multi-device configuration, you must generate the configuration device's POF from each project's SOF. You can combine multiple SOFs using the **Convert Programming Files** window in the Quartus II software.

For more information on how to create configuration files for multi-device configuration chains, refer to the *Software Settings* chapter of the *Configuration Handbook*.

In multi-device PS configuration, the first device's nCE pin is connected to GND while its nCEO pin is connected to nCE of the next device in the chain. The last device's nCE input comes from the previous device, while its nCEO pin is left floating. After the first device completes configuration in a multi-device configuration chain, its nCEO pin drives low to activate the second device's nCE pin, prompting the second device to begin configuration. All other configuration pins (nCONFIG, nSTATUS, DCLK, DATA0, and CONF_DONE) are connected to every device in the chain. Configuration signals can require buffering to ensure signal integrity and prevent clock skew problems. Ensure that the DCLK and DATA lines are buffered for every fourth device.

When configuring multiple devices, configuration does not begin until all devices release their OE or nSTATUS pins. Similarly, since all device CONF_DONE pins are tied together, all devices initialize and enter user mode at the same time.

Since all nSTATUS and CONF_DONE pins are tied together, if any device detects an error, configuration stops for the entire chain and the entire chain must be reconfigured. For example, if the first device flags an error on nSTATUS, it resets the chain by pulling its nSTATUS pin low. This low signal drives the OE pin low on the enhanced configuration device and drives nSTATUS low on all devices, causing them to enter a reset state. This behavior is similar to a single device detecting an error.

If the **Auto-restart configuration after error** option is turned on, the devices will automatically initiate reconfiguration if an error occurs. The devices will release their nSTATUS pins after a reset time-out period (maximum of 100 µs). When all the nSTATUS pins are released and pulled high, the configuration device tries to reconfigure the chain. If the **Auto-restart configuration after error** option is turned off, the external system must monitor nSTATUS for errors and then pulse nCONFIG low for at least 2 µs to restart configuration. The external system can pulse nCONFIG if nCONFIG is under system control rather than tied to V_{CC}.

The enhanced configuration devices also support parallel configuration of up to eight devices. The n-bit (n = 1, 2, 4, or 8) PS configuration mode allows enhanced configuration devices to concurrently configure devices or a chain of devices. In addition, these devices do not have to be the same device family or density as they can be any combination of Altera devices. An individual enhanced configuration device DATA line is available for each targeted device. Each DATA line can also feed a daisy chain of devices. Figure 7–23 shows how to concurrently configure multiple devices using an enhanced configuration device.

Figure 7–23. Concurrent PS Configuration of Multiple Devices Using an Enhanced Configuration Device

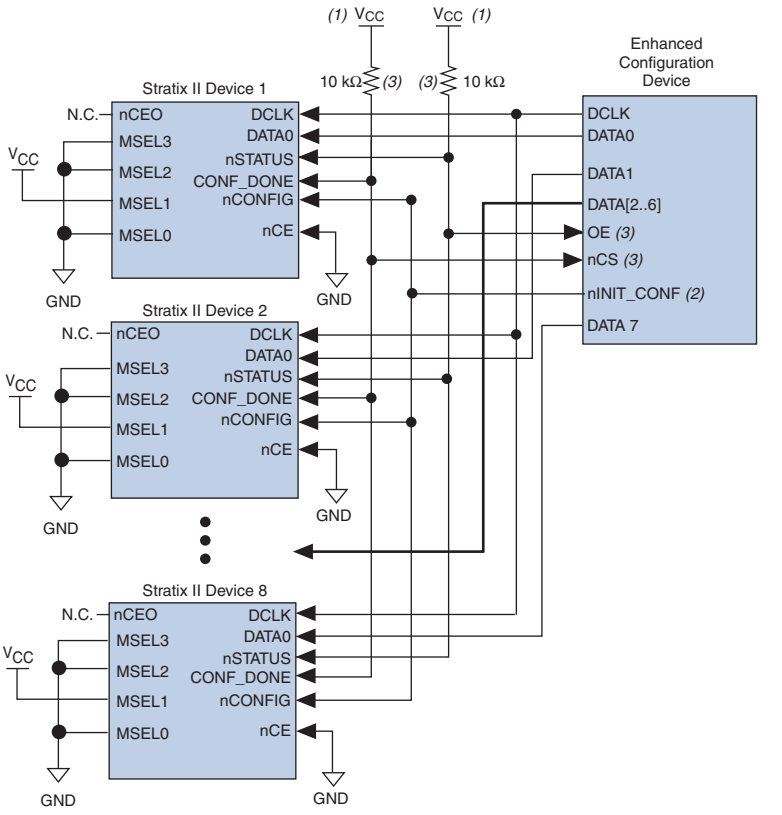

Notes to Figure 7–23:

(1) The pull-up resistor should be connected to the same supply voltage as the configuration device.

(2) The nINIT_CONF pin is available on enhanced configuration devices and has an internal pull-up resistor that is always active, meaning an external pull-up resistor should not be used on the nINIT_CONF-nCONFIG line. The nINIT_CONF pin does not need to be connected if its functionality is not used. If nINIT_CONF is not used, nCONFIG must be pulled to V_{CC} either directly or through a resistor.

(3) The enhanced configuration devices' OE and nCS pins have internal programmable pull-up resistors. If internal pull-up resistors are used, external pull-up resistors should not be used on these pins. The internal pull-up resistors are used by default in the Quartus II software. To turn off the internal pull-up resistors, check the **Disable nCS and OE pull-ups on configuration device** option when generating programming files.

The Quartus II software only allows the selection of n-bit PS configuration modes, where n must be 1, 2, 4, or 8. However, you can use these modes to configure any number of devices from 1 to 8. When configuring SRAM-based devices using n-bit PS modes, use Table 7–16 to select the appropriate configuration mode for the fastest configuration times.

Table 7–16. Recommended Configuration Using n-Bit PS Modes

Number of Devices *(1)*	Recommended Configuration Mode
1	1-bit PS
2	2-bit PS
3	4-bit PS
4	4-bit PS
5	8-bit PS
6	8-bit PS
7	8-bit PS
8	8-bit PS

Note to Table 7–16:

(1) Assume that each DATA line is only configuring one device, not a daisy chain of devices.

For example, if you configure three devices, you would use the 4-bit PS mode. For the DATA0, DATA1, and DATA2 lines, the corresponding SOF data is transmitted from the configuration device to the device. For DATA3, you can leave the corresponding Bit3 line blank in the Quartus II software. On the PCB, leave the DATA3 line from the enhanced configuration device unconnected.

Alternatively, you can daisy chain two devices to one DATA line while the other DATA lines drive one device each. For example, you could use the 2-bit PS mode to drive two devices with DATA Bit0 (two EP2S15 devices) and the third device (EP2S30 device) with DATA Bit1. This 2-bit PS configuration scheme requires less space in the configuration flash memory, but can increase the total system configuration time.

A system may have multiple devices that contain the same configuration data. To support this configuration scheme, all device nCE inputs are tied to GND, while nCEO pins are left floating. All other configuration pins (nCONFIG, nSTATUS, DCLK, DATA0, and CONF_DONE) are connected to every device in the chain. Configuration signals can require buffering to ensure signal integrity and prevent clock skew problems. Ensure that the DCLK and DATA lines are buffered for every fourth device. Devices must be the same density and package. All devices will start and complete

configuration at the same time. Figure 7–24 shows multi-device PS configuration when the Stratix II or Stratix II GX devices are receiving the same configuration data.

Figure 7–24. Multiple-Device PS Configuration Using an Enhanced Configuration Device When devices Receive the Same Data

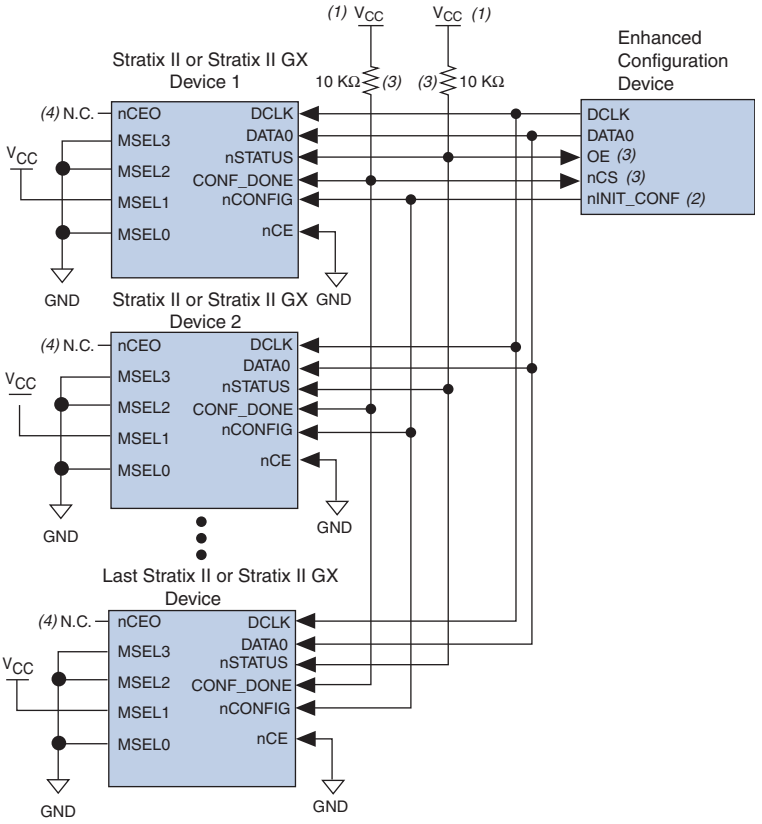

Notes to Figure 7–24:

(1) The pull-up resistor should be connected to the same supply voltage as the configuration device.

(2) The nINIT_CONF pin is available on enhanced configuration devices and has an internal pull-up resistor that is always active, meaning an external pull-up resistor should not be used on the nINIT_CONF-nCONFIG line. The nINIT_CONF pin does not need to be connected if its functionality is not used. If nINIT_CONF is not used, nCONFIG must be pulled to V_{CC} either directly or through a resistor.

(3) The enhanced configuration devices' OE and nCS pins have internal programmable pull-up resistors. If internal pull-up resistors are used, external pull-up resistors should not be used on these pins. The internal pull-up resistors are used by default in the Quartus II software. To turn off the internal pull-up resistors, check the **Disable nCS and OE pull-ups on configuration device** option when generating programming files.

(4) The nCEO pins of all devices are left unconnected when configuring the same configuration data into multiple devices.

You can cascade several EPC2 devices to configure multiple Stratix II or Stratix II GX devices. The first configuration device in the chain is the master configuration device, while the subsequent devices are the slave devices. The master configuration device sends DCLK to the Stratix II or Stratix II GX devices and to the slave configuration devices. The first EPC device's nCS pin is connected to the CONF_DONE pins of the devices, while its nCASC pin is connected to nCS of the next configuration device in the chain. The last device's nCS input comes from the previous device, while its nCASC pin is left floating. When all data from the first configuration device is sent, it drives nCASC low, which in turn drives nCS on the next configuration device. A configuration device requires less than one clock cycle to activate a subsequent configuration device, so the data stream is uninterrupted.



Enhanced configuration devices cannot be cascaded.

Because all nSTATUS and CONF_DONE pins are tied together, if any device detects an error, the master configuration device stops configuration for the entire chain and the entire chain must be reconfigured. For example, if the master configuration device does not detect CONF_DONE going high at the end of configuration, it resets the entire chain by pulling its OE pin low. This low signal drives the OE pin low on the slave configuration device(s) and drives nSTATUS low on all devices, causing them to enter a reset state. This behavior is similar to the device detecting an error in the configuration data.

Figure 7–25 shows how to configure multiple devices using cascaded EPC2 devices.

Figure 7–25. Multi-Device PS Configuration Using Cascaded EPC2 Devices

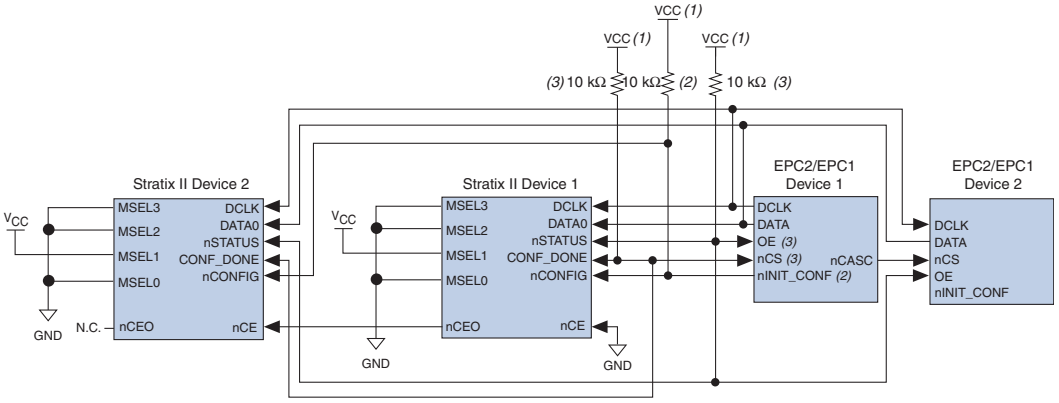

Notes to Figure 7–25:

(1) The pull-up resistor should be connected to the same supply voltage as the configuration device.

(2) The nINIT_CONF pin (available on enhanced configuration devices and EPC2 devices only) has an internal pull-up resistor that is always active, meaning an external pull-up resistor should not be used on the nINIT_CONF-nCONFIG line. The nINIT_CONF pin does not need to be connected if its functionality is not used.

(3) The enhanced configuration devices' and EPC2 devices' OE and nCS pins have internal programmable pull-up resistors. External 10-kΩ pull-up resistors should be used. To turn off the internal pull-up resistors, check the **Disable nCS and OE pull-ups on configuration device** option when generating programming files.

When using enhanced configuration devices or EPC2 devices, nCONFIG of the device can be connected to nINIT_CONF of the configuration device, allowing the INIT_CONF JTAG instruction to initiate device configuration. The nINIT_CONF pin does not need to be connected if its functionality is not used. An internal pull-up resistor on the nINIT_CONF pin is always active in the enhanced configuration devices and the EPC2 devices, which means that you shouldn't be using an external pull-up resistor if nCONFIG is tied to nINIT_CONF. If you are using multiple EPC2 devices to configure a Stratix II or Stratix II GX device(s), only the first EPC2 has its nINIT_CONF pin tied to the device's nCONFIG pin.

You can use a single configuration chain to configure Stratix II or Stratix II GX devices with other Altera devices. To ensure that all devices in the chain complete configuration at the same time or that an error flagged by one device initiates reconfiguration in all devices, all of the device CONF_DONE and nSTATUS pins must be tied together.

For more information on configuring multiple Altera devices in the same configuration chain, refer to the *Configuring Mixed Altera FPGA Chains* chapter in the *Configuration Handbook*.

Figure 7–26 shows the timing waveform for the PS configuration scheme using a configuration device.

Figure 7–26. Stratix II and Stratix II GX PS Configuration Using a Configuration Device Timing Waveform

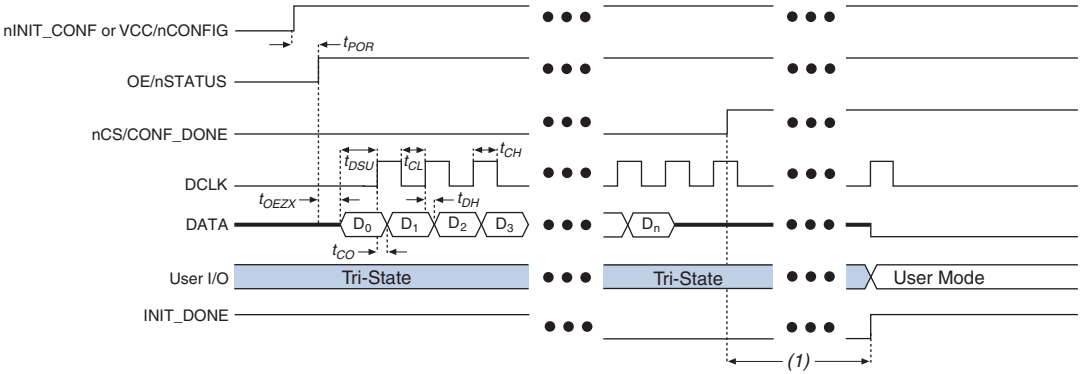

Note to Figure 7–26:

(1) The initialization clock can come from the Stratix II or Stratix II GX device's internal oscillator or the CLKUSR pin.

For timing information, refer to the *Enhanced Configuration Devices (EPC4, EPC8 & EPC16) Data Sheet* chapter in volume 2 of the *Configuration Handbook* or the *Configuration Devices for SRAM-Based LUT Devices Data Sheet* chapter in volume 2 of the *Configuration Handbook*.

Device configuration options and how to create configuration files are discussed further in the *Software Settings* chapter in volume 2 of the *Configuration Handbook*.

PS Configuration Using a Download Cable

In this section, the generic term "download cable" includes the Altera USB-Blaster™ universal serial bus (USB) port download cable, MasterBlaster™ serial/USB communications cable, ByteBlaster™ II parallel port download cable, and the ByteBlaster MV parallel port download cable.

In PS configuration with a download cable, an intelligent host (such as a PC) transfers data from a storage device to the device via the USB Blaster, MasterBlaster, ByteBlaster II, or ByteBlasterMV cable.

Upon power-up, the Stratix II and Stratix II GX devices go through a POR. The POR delay is dependent on the PORSEL pin setting. When PORSEL is driven low, the POR time is approximately 100 ms. If PORSEL is driven high, the POR time is approximately 12 ms. During POR, the device will reset, hold nSTATUS low, and tri-state all user I/O pins. Once the device successfully exits POR, all user I/O pins continue to be tri-stated. If nIO_pullup is driven low during power-up and configuration, the user I/O pins and dual-purpose I/O pins will have weak pull-up resistors which are on (after POR) before and during configuration. If nIO_pullup is driven high, the weak pull-up resistors are disabled.



The value of the weak pull-up resistors on the I/O pins that are on before and during configuration can be found in the *DC & Switching Characteristics* chapter in volume 1 of the *Stratix II Device Handbook* and the *DC & Switching Characteristics* chapter in volume 1 of the *Stratix II GX Device Handbook.*

The configuration cycle consists of three stages: reset, configuration and initialization. While nCONFIG or nSTATUS are low, the device is in reset. To initiate configuration in this scheme, the download cable generates a low-to-high transition on the nCONFIG pin.



To begin configuration, power the V_{CCINT}, V_{CCIO}, and V_{CCPD} voltages (for the banks where the configuration and JTAG pins reside) to the appropriate voltage levels.

When nCONFIG goes high, the device comes out of reset and releases the open-drain nSTATUS pin, which is then pulled high by an external 10-kΩ pull-up resistor. Once nSTATUS is released the device is ready to receive configuration data and the configuration stage begins. The programming hardware or download cable then places the configuration data one bit at a time on the device's DATA0 pin. The configuration data is clocked into the target device until CONF_DONE goes high. The CONF_DONE pin must have an external 10-kΩ pull-up resistor in order for the device to initialize.

When using a download cable, setting the **Auto-restart configuration after error** option does not affect the configuration cycle because you must manually restart configuration in the Quartus II software when an error occurs. Additionally, the **Enable user-supplied start-up clock** (**CLKUSR**) option has no affect on the device initialization since this option is disabled in the SOF when programming the device using the Quartus II programmer and download cable. Therefore, if you turn on the CLKUSR option, you do not need to provide a clock on CLKUSR when you are configuring the device with the Quartus II programmer and a

download cable. Figure 7–27 shows PS configuration for Stratix II or Stratix II GX devices using a USB Blaster, MasterBlaster, ByteBlaster II, or ByteBlasterMV cable.

Figure 7–27. PS Configuration Using a USB Blaster, MasterBlaster, ByteBlaster II or ByteBlasterMV Cable

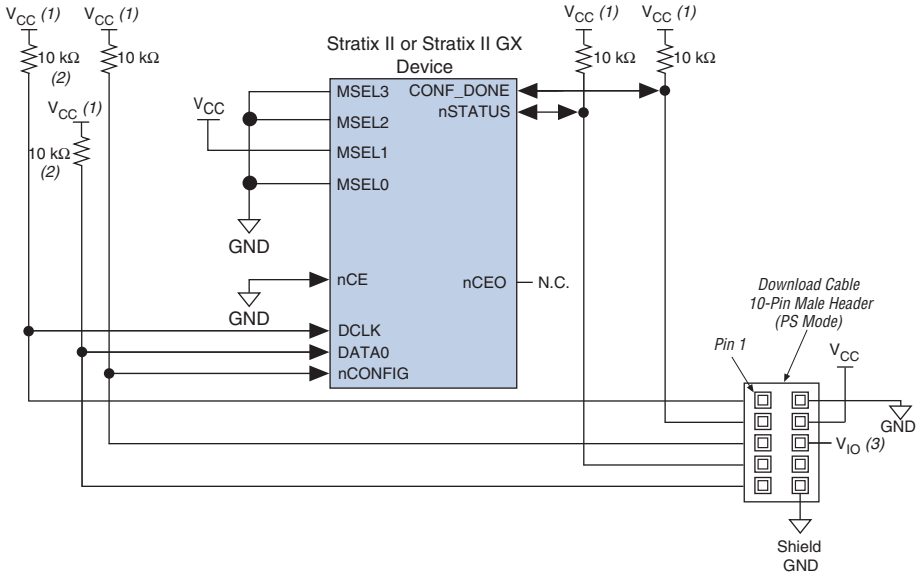

Notes to Figure 7–27:

(1) The pull-up resistor should be connected to the same supply voltage as the USB Blaster, MasterBlaster (V_{IO} pin), ByteBlaster II or ByteBlasterMV cable.

(2) The pull-up resistors on DATA0 and DCLK are only needed if the download cable is the only configuration scheme used on your board. This ensures that DATA0 and DCLK are not left floating after configuration. For example, if you are also using a configuration device, the pull-up resistors on DATA0 and DCLK are not needed.

(3) Pin 6 of the header is a V_{IO} reference voltage for the MasterBlaster output driver. V_{IO} should match the device's V_{CCIO}. Refer to the *MasterBlaster Serial/USB Communications Cable User Guide* for this value. In the ByteBlasterMV cable, this pin is a no connect. In the USB Blaster and ByteBlaster II cables, this pin is connected to nCE when it is used for active serial programming, otherwise it is a no connect.

You can use a download cable to configure multiple Stratix II or Stratix II GX devices by connecting each device's nCEO pin to the subsequent device's nCE pin. The first device's nCE pin is connected to GND while its nCEO pin is connected to the nCE of the next device in the chain. The last device's nCE input comes from the previous device, while its nCEO pin is left floating. All other configuration pins, nCONFIG, nSTATUS, DCLK, DATA0, and CONF_DONE are connected to every device in the chain. Because all CONF_DONE pins are tied together, all devices in the chain initialize and enter user mode at the same time.

In addition, because the nSTATUS pins are tied together, the entire chain halts configuration if any device detects an error. The **Auto-restart configuration after error** option does not affect the configuration cycle because you must manually restart configuration in the Quartus II software when an error occurs.

Figure 7–28 shows how to configure multiple Stratix II or Stratix II GX devices with a download cable.

Figure 7–28. Multi-Device PS Configuration using a USB Blaster, MasterBlaster, ByteBlaster II or ByteBlasterMV Cable

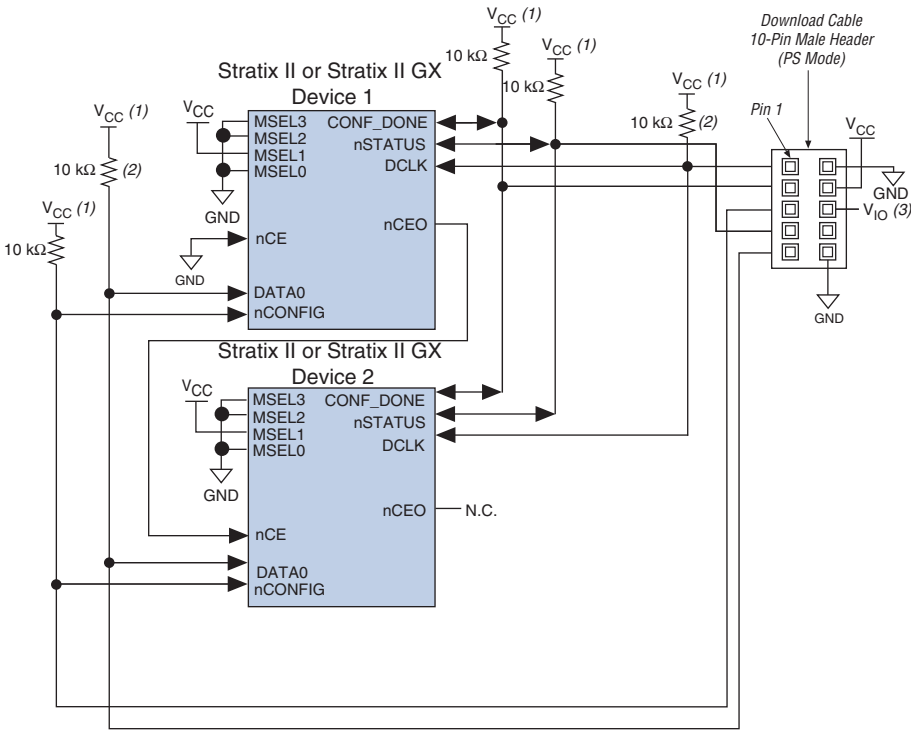

Notes to Figure 7–28:

(1) The pull-up resistor should be connected to the same supply voltage as the USB Blaster, MasterBlaster (V_{IO} pin), ByteBlaster II or ByteBlasterMV cable.

(2) The pull-up resistors on DATA0 and DCLK are only needed if the download cable is the only configuration scheme used on your board. This is to ensure that DATA0 and DCLK are not left floating after configuration. For example, if you are also using a configuration device, the pull-up resistors on DATA0 and DCLK are not needed.

(3) Pin 6 of the header is a V_{IO} reference voltage for the MasterBlaster output driver. V_{IO} should match the device's V_{CCIO}. Refer to the *MasterBlaster Serial/USB Communications Cable User Guide* for this value. In the ByteBlasterMV cable, this pin is a no connect. In the USB Blaster and ByteBlaster II cables, this pin is connected to nCE when it is used for active serial programming, otherwise it is a no connect.

If you are using a download cable to configure device(s) on a board that also has configuration devices, electrically isolate the configuration device from the target device(s) and cable. One way of isolating the configuration device is to add logic, such as a multiplexer, that can select between the configuration device and the cable. The multiplexer chip allows bidirectional transfers on the nSTATUS and CONF_DONE signals. Another option is to add switches to the five common signals (nCONFIG, nSTATUS, DCLK, DATA0, and CONF_DONE) between the cable and the configuration device. The last option is to remove the configuration device from the board when configuring the device with the cable. Figure 7–29 shows a combination of a configuration device and a download cable to configure an device.

Figure 7–29. PS Configuration with a Download Cable and Configuration Device Circuit

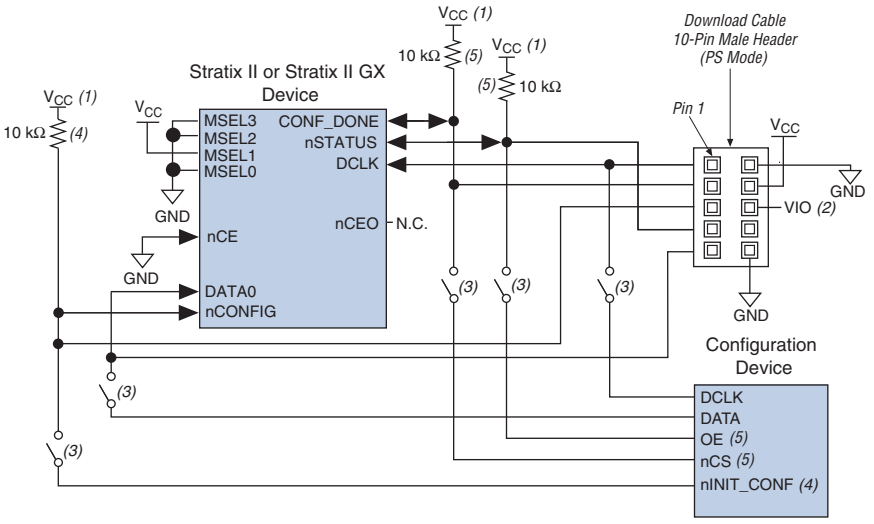

Notes to Figure 7–29:

(1) The pull-up resistor should be connected to the same supply voltage as the configuration device.

(2) Pin 6 of the header is a V_{IO} reference voltage for the MasterBlaster output driver. V_{IO} should match the device's V_{CCIO}. Refer to the *MasterBlaster Serial/USB Communications Cable User Guide* for this value. In the ByteBlasterMV cable, this pin is a no connect. In the USB Blaster and ByteBlaster II cables, this pin is connected to nCE when it is used for active serial programming, otherwise it is a no connect.

(3) You should not attempt configuration with a download cable while a configuration device is connected to a Stratix II or Stratix II GX device. Instead, you should either remove the configuration device from its socket when using the download cable or place a switch on the five common signals between the download cable and the configuration device.

(4) The nINIT_CONF pin (available on enhanced configuration devices and EPC2 devices only) has an internal pull-up resistor that is always active. This means an external pull-up resistor should not be used on the nINIT_CONF-nCONFIG line. The nINIT_CONF pin does not need to be connected if its functionality is not used.

(5) The enhanced configuration devices' and EPC2 devices' OE and nCS pins have internal programmable pull-up resistors. If internal pull-up resistors are used, external pull-up resistors should not be used on these pins. The internal pull-up resistors are used by default in the Quartus II software. To turn off the internal pull-up resistors, check the **Disable nCS and OE pull-up resistors on configuration device** option when generating programming files.

For more information on how to use the USB Blaster, MasterBlaster, ByteBlaster II or ByteBlasterMV cables, refer to the following data sheets:

- *USB Blaster Download Cable User Guide*
- *MasterBlaster Serial/USB Communications Cable User Guide*
- *ByteBlaster II Download Cable User Guide*
- *ByteBlasterMV Download Cable User Guide*

Passive Parallel Asynchronous Configuration

Passive parallel asynchronous (PPA) configuration uses an intelligent host, such as a microprocessor, to transfer configuration data from a storage device, such as flash memory, to the target Stratix II or Stratix II GX device.

Configuration data can be stored in RBF, HEX, or TTF format. The host system outputs byte-wide data and the accompanying strobe signals to the device. When using PPA, pull the DCLK pin high through a 10-kΩ pull-up resistor to prevent unused configuration input pins from floating.



You cannot use the Stratix II or Stratix II GX decompression and design security features if you are configuring your Stratix II or Stratix II GX device using PPA mode.

Table 7–17 shows the MSEL pin settings when using the PS configuration scheme.

Table 7–17. Stratix II and Stratix II GX MSEL Pin Settings for PPA Configuration Schemes

Configuration Scheme	MSEL3	MSEL2	MSEL1	MSEL0
PPA	0	0	0	1
Remote System Upgrade PPA *(1)*	0	1	0	1

Note to Table 7–17:

(1) This scheme requires that you drive the RUnLU pin to specify either remote update or local update. For more information about remote system upgrades in Stratix II and Stratix II GX devices, refer to the *Remote System Upgrades With Stratix II & Stratix II GX Devices* chapter in volume 2 of the *Stratix II Device Handbook* or the *Remote System Upgrades With Stratix II & Stratix II GX Devices* chapter in volume 2 of the *Stratix II GX Device Handbook*.

Figure 7–30 shows the configuration interface connections between the device and a microprocessor for single device PPA configuration. The microprocessor or an optional address decoder can control the device's chip select pins, nCS and CS. The address decoder allows the microprocessor to select the Stratix II or Stratix II GX device by accessing a particular address, which simplifies the configuration process. Hold the nCS and CS pins active during configuration and initialization.

Figure 7–30. Single Device PPA Configuration Using a Microprocessor

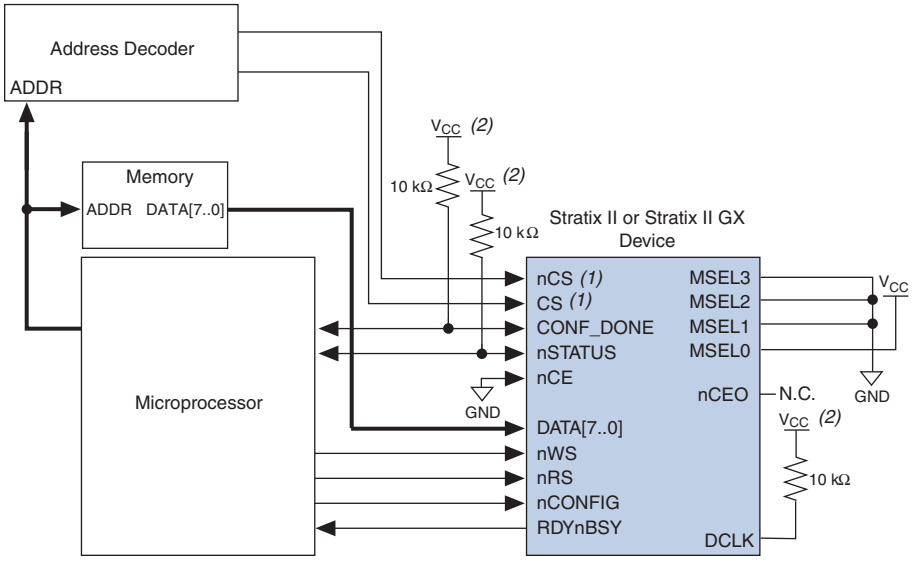

Notes to Figure 7–30:

(1) If not used, the CS pin can be connected to V_{CC} directly. If not used, the nCS pin can be connected to GND directly.

(2) The pull-up resistor should be connected to a supply that provides an acceptable input signal for the device. V_{CC} should be high enough to meet the V_{IH} specification of the I/O on the device and the external host.

During PPA configuration, it is only required to use either the nCS or CS pin. Therefore, if you are using only one chip-select input, the other must be tied to the active state. For example, nCS can be tied to ground while CS is toggled to control configuration. The device's nCS or CS pins can be toggled during PPA configuration if the design meets the specifications set for t_{CSSU}, t_{WSP}, and t_{CSH} listed in Table 7–18.

Upon power-up, the Stratix II and Stratix II GX devices go through a POR. The POR delay is dependent on the PORSEL pin setting. When PORSEL is driven low, the POR time is approximately 100 ms. If PORSEL is driven high, the POR time is approximately 12 ms. During POR, the device will reset, hold nSTATUS low, and tri-state all user I/O pins. Once the device successfully exits POR, all user I/O pins continue to be tri-stated. If nIO_pullup is driven low during power-up and configuration, the user I/O pins and dual-purpose I/O pins will have weak pull-up resistors which are on (after POR) before and during configuration. If nIO_pullup is driven high, the weak pull-up resistors are disabled.

You can hold nConfig low in order to stop device configuration.

The value of the weak pull-up resistors on the I/O pins that are on before and during configuration can be found in the *DC & Switching Characteristics* chapter in volume 1 of the *Stratix II Device Handbook* and the *DC & Switching Characteristics* chapter in volume 1 of the *Stratix II GX Device Handbook*.

The configuration cycle consists of three stages: reset, configuration and initialization. While nCONFIG or nSTATUS are low, the device is in reset. To initiate configuration, the microprocessor must generate a low-to-high transition on the nCONFIG pin.

To begin configuration, power the V_{CCINT}, V_{CCIO}, and V_{CCPD} voltages (for the banks where the configuration and JTAG pins reside) to the appropriate voltage levels.

When nCONFIG goes high, the device comes out of reset and releases the open-drain nSTATUS pin, which is then pulled high by an external 10-kΩ pull-up resistor. Once nSTATUS is released the device is ready to receive configuration data and the configuration stage begins. When nSTATUS is pulled high, the microprocessor should then assert the target device's nCS pin low and/or CS pin high. Next, the microprocessor places an 8-bit configuration word (one byte) on the target device's DATA[7..0] pins and pulses the nWS pin low.

On the rising edge of nWS, the target device latches in a byte of configuration data and drives its RDYnBSY signal low, which indicates it is processing the byte of configuration data. The microprocessor can then perform other system functions while the Stratix II or Stratix II GX device is processing the byte of configuration data.

During the time RDYnBSY is low, the Stratix II or Stratix II GX device internally processes the configuration data using its internal oscillator (typically 100 MHz). When the device is ready for the next byte of configuration data, it will drive RDYnBSY high. If the microprocessor senses a high signal when it polls RDYnBSY, the microprocessor sends the next byte of configuration data to the device.

Alternatively, the nRS signal can be strobed low, causing the RDYnBSY signal to appear on DATA7. Because RDYnBSY does not need to be monitored, this pin doesn't need to be connected to the microprocessor. Do not drive data onto the data bus while nRS is low because it will cause contention on the DATA7 pin. If you are not using the nRS pin to monitor configuration, it should be tied high.

To simplify configuration and save an I/O port, the microprocessor can wait for the total time of t_{BUSY} (max) + t_{RDY2WS} + t_{W2SB} before sending the next data byte. In this set-up, nRS should be tied high and RDYnBSY does not need to be connected to the microprocessor. The t_{BUSY}, t_{RDY2WS}, and t_{W2SB} timing specifications are listed in Table 7–18 on page 7–82.

Next, the microprocessor checks nSTATUS and CONF_DONE. If nSTATUS is not low and CONF_DONE is not high, the microprocessor sends the next data byte. However, if nSTATUS is not low and all the configuration data has been received, the device is ready for initialization. The CONF_DONE pin will go high one byte early in parallel configuration (FPP and PPA) modes. The last byte is required for serial configuration (AS and PS) modes. A low-to-high transition on CONF_DONE indicates configuration is complete and initialization of the device can begin. The open-drain CONF_DONE pin is pulled high by an external 10-kΩ pull-up resistor. The CONF_DONE pin must have an external 10-kΩ pull-up resistor in order for the device to initialize.

In Stratix II and Stratix II GX devices, the initialization clock source is either the internal oscillator (typically 10 MHz) or the optional CLKUSR pin. By default, the internal oscillator is the clock source for initialization. If the internal oscillator is used, the Stratix II or Stratix II GX device provides itself with enough clock cycles for proper initialization. Therefore, if the internal oscillator is the initialization clock source, sending the entire configuration file to the device is sufficient to configure and initialize the device.

You also have the flexibility to synchronize initialization of multiple devices or to delay initialization with the CLKUSR option. The **Enable user-supplied start-up clock** (**CLKUSR**) option can be turned on in the Quartus II software from the **General** tab of the **Device & Pin Options** dialog box. Supplying a clock on CLKUSR does not affect the configuration process. After CONF_DONE goes high, CLKUSR is enabled after the time specified as t_{CD2CU}. After this time period elapses, the Stratix II and Stratix II GX devices require 299 clock cycles to initialize properly and enter user mode. Stratix II devices support a CLKUSR f_{MAX} of 100 MHz.

An optional INIT_DONE pin is available, which signals the end of initialization and the start of user-mode with a low-to-high transition. This **Enable INIT_DONE Output** option is available in the Quartus II software from the **General** tab of the **Device & Pin Options** dialog box. If the INIT_DONE pin is used it is high because of an external 10-kΩ pull-up resistor when nCONFIG is low and during the beginning of configuration. Once the option bit to enable INIT_DONE is programmed into the device (during the first frame of configuration data), the INIT_DONE pin goes low. When initialization is complete, the

INIT_DONE pin is released and pulled high. The microprocessor must be able to detect this low-to-high transition that signals the device has entered user mode. When initialization is complete, the device enters user mode. In user-mode, the user I/O pins no longer have weak pull-up resistors and function as assigned in your design.

To ensure DATA[7..0] is not left floating at the end of configuration, the microprocessor must drive them either high or low, whichever is convenient on your board. After configuration, the nCS, CS, nRS, nWS, RDYnBSY, and DATA[7..0] pins can be used as user I/O pins. When choosing the PPA scheme in the Quartus II software as a default, these I/O pins are tri-stated in user mode and should be driven by the microprocessor. To change this default option in the Quartus II software, select the **Dual-Purpose Pins** tab of the **Device & Pin Options** dialog box.

If an error occurs during configuration, the device drives its nSTATUS pin low, resetting itself internally. The low signal on the nSTATUS pin also alerts the microprocessor that there is an error. If the **Auto-restart configuration after error** option-available in the Quartus II software from the **General** tab of the **Device & Pin Options** dialog box-is turned on, the device releases nSTATUS after a reset time-out period (maximum of 100 µs). After nSTATUS is released and pulled high by a pull-up resistor, the microprocessor can try to reconfigure the target device without needing to pulse nCONFIG low. If this option is turned off, the microprocessor must generate a low-to-high transition (with a low pulse of at least 2 µs) on nCONFIG to restart the configuration process.

The microprocessor can also monitor the CONF_DONE and INIT_DONE pins to ensure successful configuration. To detect errors and determine when programming completes, monitor the CONF_DONE pin with the microprocessor. If the microprocessor sends all configuration data but CONF_DONE or INIT_DONE has not gone high, the microprocessor must reconfigure the target device.



If you are using the optional CLKUSR pin and nCONFIG is pulled low to restart configuration during device initialization, ensure CLKUSR continues toggling during the time nSTATUS is low (maximum of 100 µs).

When the device is in user-mode, a reconfiguration can be initiated by transitioning the nCONFIG pin low-to-high. The nCONFIG pin should go low for at least 2 µs. When nCONFIG is pulled low, the device also pulls nSTATUS and CONF_DONE low and all I/O pins are tri-stated. Once nCONFIG returns to a logic high level and nSTATUS is released by the device, reconfiguration begins.

Figure 7–31 shows how to configure multiple Stratix II or Stratix II GX devices using a microprocessor. This circuit is similar to the PPA configuration circuit for a single device, except the devices are cascaded for multi-device configuration.

Figure 7–31. Multi-Device PPA Configuration Using a Microprocessor

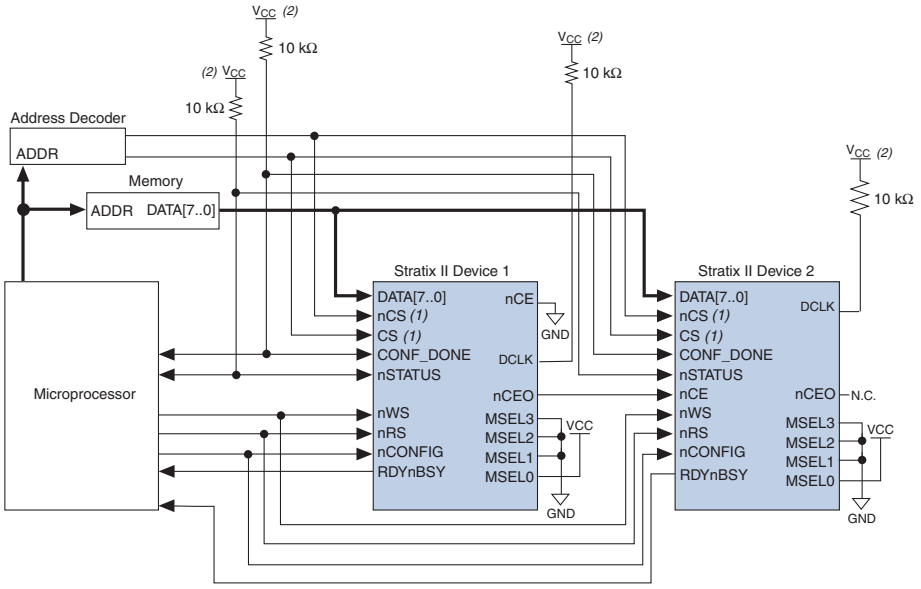

Notes to Figure 7–31:

(1) If not used, the CS pin can be connected to V_{CC} directly. If not used, the nCS pin can be connected to GND directly.

(2) The pull-up resistor should be connected to a supply that provides an acceptable input signal for all devices in the chain. V_{CC} should be high enough to meet the V_{IH} specification of the I/O on the device and the external host.

In multi-device PPA configuration the first device's nCE pin is connected to GND while its nCEO pin is connected to nCE of the next device in the chain. The last device's nCE input comes from the previous device, while its nCEO pin is left floating. After the first device completes configuration in a multi-device configuration chain, its nCEO pin drives low to activate the second device's nCE pin, which prompts the second device to begin configuration. The second device in the chain begins configuration within one clock cycle. Therefore, the transfer of data destinations is transparent to the microprocessor.

Each device's RDYnBSY pin can have a separate input to the microprocessor. Alternatively, if the microprocessor is pin limited, all the RDYnBSY pins can feed an AND gate and the output of the AND gate can feed the microprocessor. For example, if you have two devices in a PPA

configuration chain, the second device's RDYnBSY pin will be high during the time that the first device is being configured. When the first device has been successfully configured, it will drive nCEO low to activate the next device in the chain and drive its RDYnBSY pin high. Therefore, since RDYnBSY signal is driven high before configuration and after configuration before entering user-mode, the device being configured will govern the output of the AND gate.

The nRS signal can be used in multi-device PPA chain because the Stratix II and Stratix II GX devices tri-state the DATA[7..0] pins before configuration and after configuration before entering user-mode to avoid contention. Therefore, only the device that is currently being configured responds to the nRS strobe by asserting DATA7.

All other configuration pins (nCONFIG, nSTATUS, DATA[7..0], nCS, CS, nWS, nRS and CONF_DONE) are connected to every device in the chain. It is not necessary to tie nCS and CS together for every device in the chain, as each device's nCS and CS input can be driven by a separate source. Configuration signals may require buffering to ensure signal integrity and prevent clock skew problems. Ensure that the DATA lines are buffered for every fourth device. Because all device CONF_DONE pins are tied together, all devices initialize and enter user mode at the same time.

Since all nSTATUS and CONF_DONE pins are tied together, if any device detects an error, configuration stops for the entire chain and the entire chain must be reconfigured. For example, if the first device flags an error on nSTATUS, it resets the chain by pulling its nSTATUS pin low. This behavior is similar to a single device detecting an error.

If the **Auto-restart configuration after error** option is turned on, the devices release their nSTATUS pins after a reset time-out period (maximum of 100 µs). After all nSTATUS pins are released and pulled high, the microprocessor can try to reconfigure the chain without needing to pulse nCONFIG low. If this option is turned off, the microprocessor must generate a low-to-high transition (with a low pulse of at least 2 µs) on nCONFIG to restart the configuration process.

In your system, you may have multiple devices that contain the same configuration data. To support this configuration scheme, all device nCE inputs are tied to GND, while nCEO pins are left floating. All other configuration pins (nCONFIG, nSTATUS, DATA[7..0], nCS, CS, nWS, nRS and CONF_DONE) are connected to every device in the chain. Configuration signals may require buffering to ensure signal integrity and prevent clock skew problems. Ensure that the DATA lines are buffered for every fourth device. Devices must be the same density and package.

All devices start and complete configuration at the same time. Figure 7–32 shows multi-device PPA configuration when both devices are receiving the same configuration data.

Figure 7–32. Multiple-Device PPA Configuration Using a Microprocessor When Both devices Receive the Same Data

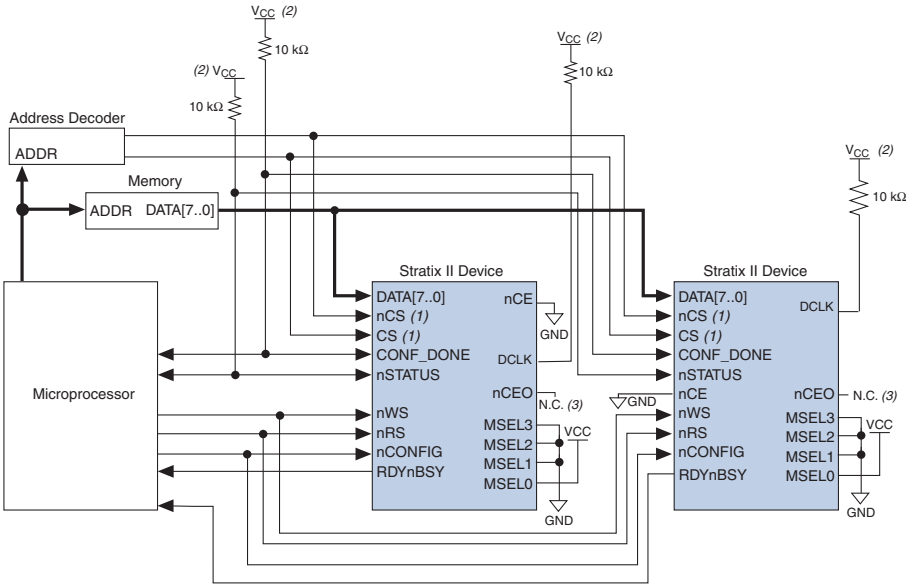

Notes to Figure 7–32:

(1) If not used, the CS pin can be connected to V_{CC} directly. If not used, the nCS pin can be connected to GND directly.

(2) The pull-up resistor should be connected to a supply that provides an acceptable input signal for all devices in the chain. V_{CC} should be high enough to meet the V_{IH} specification of the I/O on the device and the external host.

(3) The nCEO pins of both devices are left unconnected when configuring the same configuration data into multiple devices.

You can use a single configuration chain to configure Stratix II or Stratix II GX devices with other Altera devices that support PPA configuration, such as Stratix, Mercury™, APEX™ 20K, ACEX® 1K, and FLEX® 10KE devices. To ensure that all devices in the chain complete configuration at the same time or that an error flagged by one device initiates reconfiguration in all devices, all of the device CONF_DONE and nSTATUS pins must be tied together.

For more information on configuring multiple Altera devices in the same configuration chain, refer to the *Configuring Mixed Altera FPGA Chains* chapter in volume 2 of the *Configuration Handbook*.

PPA Configuration Timing

Figure 7–33 shows the timing waveform for the PPA configuration scheme using a microprocessor.

Figure 7–33. Stratix II and Stratix II GX PPA Configuration Timing Waveform Using nWS *Note (1)*

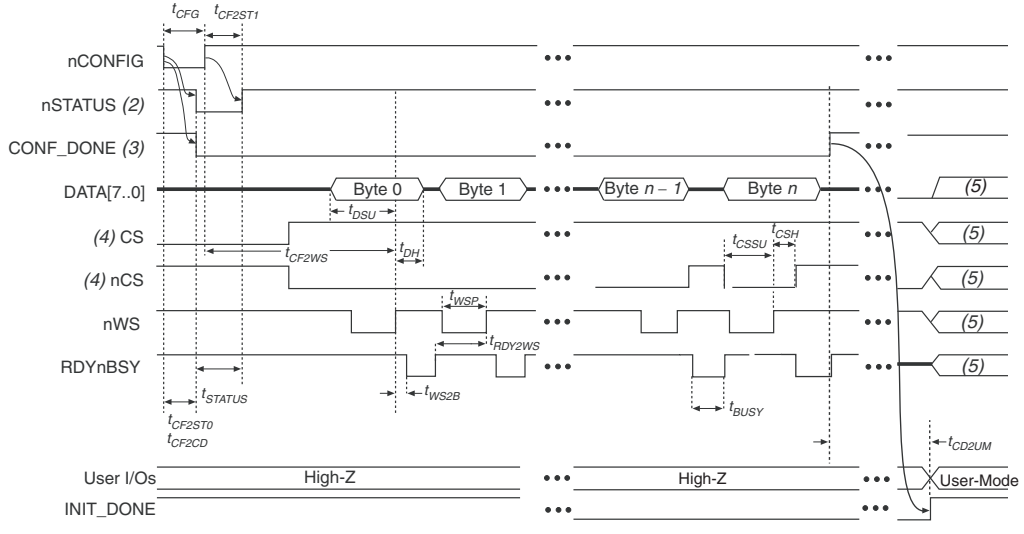

Notes to Figure 7–33:

(1) The beginning of this waveform shows the device in user-mode. In user-mode, nCONFIG, nSTATUS and CONF_DONE are at logic high levels. When nCONFIG is pulled low, a reconfiguration cycle begins.

(2) Upon power-up, Stratix II and Stratix II GX devices hold nSTATUS low for the time of the POR delay.

(3) Upon power-up, before and during configuration, CONF_DONE is low.

(4) The user can toggle nCS or CS during configuration if the design meets the specification for t_{CSSU}, t_{WSP}, and t_{CSH}.

(5) DATA[7..0], CS, nCS, nWS, nRS, and RDYnBSY are available as user I/O pins after configuration and the state of theses pins depends on the dual-purpose pin settings.

Figure 7–34 shows the timing waveform for the PPA configuration scheme when using a strobed nRS and nWS signal.

Figure 7–34. Stratix II and Stratix II GX PPA Configuration Timing Waveform Using nRS and nWS *Note (1)*

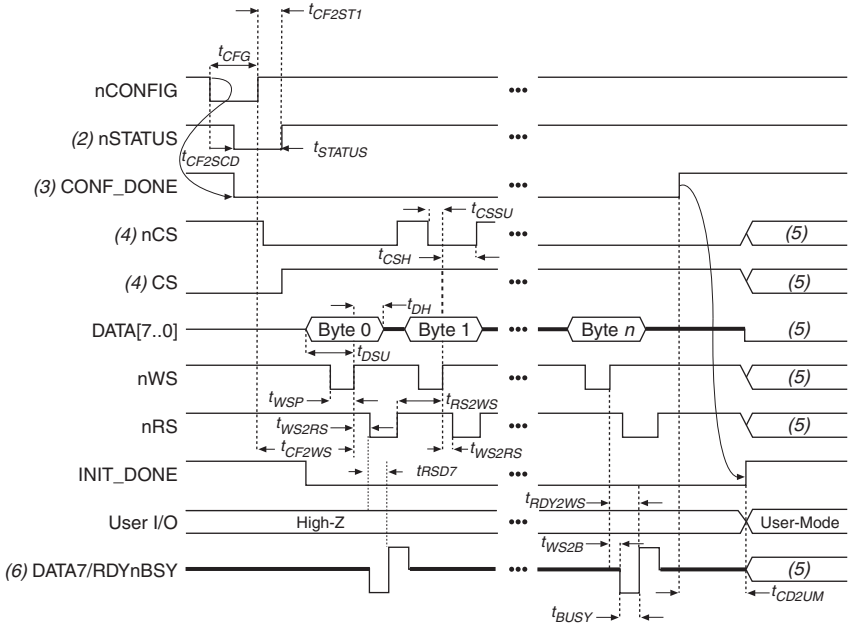

Notes to Figure 7–34:

(1) The beginning of this waveform shows the device in user-mode. In user-mode, nCONFIG, nSTATUS and CONF_DONE are at logic high levels. When nCONFIG is pulled low, a reconfiguration cycle begins.
(2) Upon power-up, Stratix II and Stratix II GX devices hold nSTATUS low for the time of the POR delay.
(3) Upon power-up, before and during configuration, CONF_DONE is low.
(4) The user can toggle nCS or CS during configuration if the design meets the specification for t_{CSSU}, t_{WSP}, and t_{CSH}.
(5) DATA[7..0], CS, nCS, nWS, nRS, and RDYnBSY are available as user I/O pins after configuration and the state of theses pins depends on the dual-purpose pin settings.
(6) DATA7 is a bidirectional pin. It is an input for configuration data input, but it is an output to show the status of RDYnBSY.

Table 7–18 defines the timing parameters for Stratix II and Stratix II GX devices for PPA configuration.

Table 7–18. PPA Timing Parameters for Stratix II and Stratix II GX Devices (Part 1 of 2)

Symbol	Parameter	Min	Max	Units
t_{CF2CD}	nCONFIG low to CONF_DONE low		800	ns
t_{CF2ST0}	nCONFIG low to nSTATUS low		800	ns

Table 7–18. PPA Timing Parameters for Stratix II and Stratix II GX Devices (Part 2 of 2)

Symbol	Parameter	Min	Max	Units
t_{CFG}	nCONFIG low pulse width	2		µs
t_{STATUS}	nSTATUS low pulse width	10	100 *(1)*	µs
t_{CF2ST1}	nCONFIG high to nSTATUS high		100 *(1)*	µs
t_{CSSU}	Chip select setup time before rising edge on nWS	10		ns
t_{CSH}	Chip select hold time after rising edge on nWS	0		ns
t_{CF2WS}	nCONFIG high to first rising edge on nWS	100		µs
t_{ST2WS}	nSTATUS high to first rising edge on nWS	2		µs
t_{DSU}	Data setup time before rising edge on nWS	10		ns
t_{DH}	Data hold time after rising edge on nWS	0		ns
t_{WSP}	nWS low pulse width	15		ns
t_{WS2B}	nWS rising edge to RDYnBSY low		20	ns
t_{BUSY}	RDYnBSY low pulse width	7	45	ns
t_{RDY2WS}	RDYnBSY rising edge to nWS rising edge	15		ns
t_{WS2RS}	nWS rising edge to nRS falling edge	15		ns
t_{RS2WS}	nRS rising edge to nWS rising edge	15		ns
t_{RSD7}	nRS falling edge to DATA7 valid with RDYnBSY signal		20	ns
t_R	Input rise time		40	ns
t_F	Input fall time		40	ns
t_{CD2UM}	CONF_DONE high to user mode *(2)*	20	100	µs
t_{CD2CU}	CONF_DONE high to CLKUSR enabled	40		ns
t_{CD2UMC}	CONF_DONE high to user mode with CLKUSR option on	t_{CD2CU} + (299 × CLKUSR period)		

Notes to Table 7–18:

(1) This value is obtainable if users do not delay configuration by extending the nCONFIG or nSTATUS low pulse width.

(2) The minimum and maximum numbers apply only if the internal oscillator is chosen as the clock source for starting up the device.



Device configuration options and how to create configuration files are discussed further in the *Software Settings* chapter in volume 2 the *Configuration Handbook*.

JTAG Configuration

The JTAG has developed a specification for boundary-scan testing. This boundary-scan test (BST) architecture offers the capability to efficiently test components on PCBs with tight lead spacing. The BST architecture can test pin connections without using physical test probes and capture functional data while a device is operating normally. The JTAG circuitry can also be used to shift configuration data into the device. The Quartus II software automatically generates SOFs that can be used for JTAG configuration with a download cable in the Quartus II software programmer.



For more information on JTAG boundary-scan testing, refer to the following documents:

- *IEEE 1149.1 (JTAG) Boundary-Scan Testing in Stratix II & Stratix II GX Devices* chapter in volume 2 of the *Stratix II Device Handbook* or the *IEEE 1149.1 (JTAG) Boundary-Scan Testing in Stratix II & Stratix II GX Devices* chapter in volume 2 of the *Stratix II GX Device Handbook*
- *Jam Programming Support - JTAG Technologies*

Stratix II and Stratix II GX devices are designed such that JTAG instructions have precedence over any device configuration modes. Therefore, JTAG configuration can take place without waiting for other configuration modes to complete. For example, if you attempt JTAG configuration of Stratix II or Stratix II GX devices during PS configuration, PS configuration is terminated and JTAG configuration begins.



You cannot use the Stratix II and Stratix II GX decompression or design security features if you are configuring your Stratix II or Stratix II GX device when using JTAG-based configuration.

A device operating in JTAG mode uses four required pins, `TDI`, `TDO`, `TMS`, and `TCK`, and one optional pin, `TRST`. The `TCK` pin has an internal weak pull-down resistor, while the `TDI`, `TMS`, and `TRST` pins have weak internal pull-up resistors (typically 25 kΩ). The `TDO` output pin is powered by V_{CCIO} in I/O bank 4. All of the JTAG input pins are powered by the 3.3-V V_{CCPD} pin. All user I/O pins are tri-stated during JTAG configuration. Table 7–19 explains each JTAG pin's function.



The `TDO` output is powered by the V_{CCIO} power supply of I/O bank 4.



For recommendations on how to connect a JTAG chain with multiple voltages across the devices in the chain, refer to the *IEEE 1149.1 (JTAG) Boundary-Scan Testing in Stratix II & Stratix II GX Devices* chapter in volume 2 of the *Stratix II Device Handbook* or the *IEEE 1149.1 (JTAG) Boundary-Scan Testing in Stratix II & Stratix II GX Devices* chapter in volume 2 of the *Stratix II GX Device Handbook*.

Table 7–19. Dedicated JTAG Pins

Pin Name	Pin Type	Description
TDI	Test data input	Serial input pin for instructions as well as test and programming data. Data is shifted in on the rising edge of TCK. If the JTAG interface is not required on the board, the JTAG circuitry can be disabled by connecting this pin to V_{CC}.
TDO	Test data output	Serial data output pin for instructions as well as test and programming data. Data is shifted out on the falling edge of TCK. The pin is tri-stated if data is not being shifted out of the device. If the JTAG circuitry is not used, leave the TDO pin unconnected.
TMS	Test mode select	Input pin that provides the control signal to determine the transitions of the TAP controller state machine. Transitions within the state machine occur on the rising edge of TCK. Therefore, TMS must be set up before the rising edge of TCK. TMS is evaluated on the rising edge of TCK. If the JTAG interface is not required on the board, the JTAG circuitry can be disabled by connecting this pin to V_{CC}.
TCK	Test clock input	The clock input to the BST circuitry. Some operations occur at the rising edge, while others occur at the falling edge. If the JTAG interface is not required on the board, the JTAG circuitry can be disabled by connecting this pin to GND.
TRST	Test reset input (optional)	Active-low input to asynchronously reset the boundary-scan circuit. The TRST pin is optional according to IEEE Std. 1149.1. If the JTAG interface is not required on the board, the JTAG circuitry can be disabled by connecting this pin to GND.

During JTAG configuration, data can be downloaded to the device on the PCB through the USB Blaster, MasterBlaster, ByteBlaster II, or ByteBlasterMV download cable. Configuring devices through a cable is similar to programming devices in-system, except the TRST pin should be connected to V_{CC}. This ensures that the TAP controller is not reset. Figure 7–35 shows JTAG configuration of a single Stratix II or Stratix II GX device.

Figure 7–35. JTAG Configuration of a Single Device Using a Download Cable

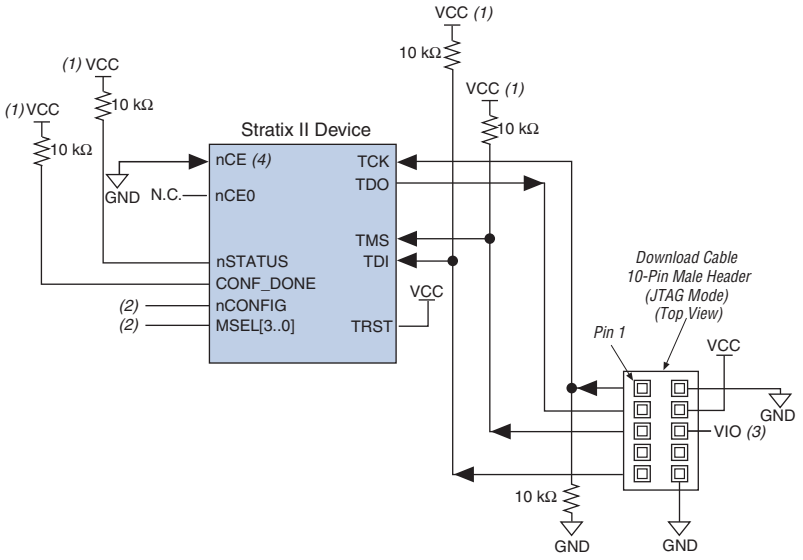

Notes to Figure 7–35:

(1) The pull-up resistor should be connected to the same supply voltage as the USB Blaster, MasterBlaster (V_{IO} pin), ByteBlaster II, or ByteBlasterMV cable.

(2) The `nCONFIG`, `MSEL[3..0]` pins should be connected to support a non-JTAG configuration scheme. If only JTAG configuration is used, connect `nCONFIG` to V_{CC}, and `MSEL[3..0]` to ground. Pull `DCLK` either high or low, whichever is convenient on your board.

(3) Pin 6 of the header is a V_{IO} reference voltage for the MasterBlaster output driver. V_{IO} should match the device's V_{CCIO}. Refer to the *MasterBlaster Serial/USB Communications Cable User Guide* for this value. In the ByteBlasterMV cable, this pin is a no connect. In the USB Blaster and ByteBlaster II cables, this pin is connected to `nCE` when it is used for active serial programming, otherwise it is a no connect.

(4) `nCE` must be connected to GND or driven low for successful JTAG configuration.

To configure a single device in a JTAG chain, the programming software places all other devices in bypass mode. In bypass mode, devices pass programming data from the `TDI` pin to the `TDO` pin through a single bypass register without being affected internally. This scheme enables the programming software to program or verify the target device. Configuration data driven into the device appears on the `TDO` pin one clock cycle later.

The Quartus II software verifies successful JTAG configuration upon completion. At the end of configuration, the software checks the state of `CONF_DONE` through the JTAG port. When Quartus II generates a (**.jam**) file for a multi-device chain, it contains instructions so that all the devices in the chain will be initialized at the same time. If `CONF_DONE` is not high, the Quartus II software indicates that configuration has failed. If

CONF_DONE is high, the software indicates that configuration was successful. After the configuration bit stream is transmitted serially via the JTAG TDI port, the TCK port is clocked an additional 299 cycles to perform device initialization.

Stratix II and Stratix II GX devices have dedicated JTAG pins that always function as JTAG pins. Not only can you perform JTAG testing on Stratix II and Stratix II GX devices before and after, but also during configuration. While other device families do not support JTAG testing during configuration, Stratix II and Stratix II GX devices support the bypass, idcode, and sample instructions during configuration without interrupting configuration. All other JTAG instructions may only be issued by first interrupting configuration and reprogramming I/O pins using the CONFIG_IO instruction.

The CONFIG_IO instruction allows I/O buffers to be configured via the JTAG port and when issued, interrupts configuration. This instruction allows you to perform board-level testing prior to configuring the Stratix II or Stratix II GX device or waiting for a configuration device to complete configuration. Once configuration has been interrupted and JTAG testing is complete, the part must be reconfigured via JTAG (PULSE_CONFIG instruction) or by pulsing nCONFIG low.

The chip-wide reset (DEV_CLRn) and chip-wide output enable (DEV_OE) pins on Stratix II and Stratix II GX devices do not affect JTAG boundary-scan or programming operations. Toggling these pins does not affect JTAG operations (other than the usual boundary-scan operation).

When designing a board for JTAG configuration of Stratix II or Stratix II GX devices, consider the dedicated configuration pins. Table 7–20 shows how these pins should be connected during JTAG configuration.

When programming a JTAG device chain, one JTAG-compatible header is connected to several devices. The number of devices in the JTAG chain is limited only by the drive capability of the download cable. When four or more devices are connected in a JTAG chain, Altera recommends buffering the TCK, TDI, and TMS pins with an on-board buffer.

Table 7–20. Dedicated Configuration Pin Connections During JTAG Configuration

Signal	Description
nCE	On all Stratix II or Stratix II GX devices in the chain, nCE should be driven low by connecting it to ground, pulling it low via a resistor, or driving it by some control circuitry. For devices that are also in multi-device FPP, AS, PS, or PPA configuration chains, the nCE pins should be connected to GND during JTAG configuration or JTAG configured in the same order as the configuration chain.
nCEO	On all Stratix II or Stratix II GX devices in the chain, nCEO can be left floating or connected to the nCE of the next device.
MSEL	These pins must not be left floating. These pins support whichever non-JTAG configuration is used in production. If only JTAG configuration is used, tie these pins to ground.
nCONFIG	Driven high by connecting to V_{CC}, pulling up via a resistor, or driven high by some control circuitry.
nSTATUS	Pull to V_{CC} via a 10-kΩ resistor. When configuring multiple devices in the same JTAG chain, each nSTATUS pin should be pulled up to V_{CC} individually.
CONF_DONE	Pull to V_{CC} via a 10-kΩ resistor. When configuring multiple devices in the same JTAG chain, each CONF_DONE pin should be pulled up to V_{CC} individually. CONF_DONE going high at the end of JTAG configuration indicates successful configuration.
DCLK	Should not be left floating. Drive low or high, whichever is more convenient on your board.

JTAG-chain device programming is ideal when the system contains multiple devices, or when testing your system using JTAG BST circuitry. Figure 7–36 shows multi-device JTAG configuration.

Figure 7–36. JTAG Configuration of Multiple Devices Using a Download Cable

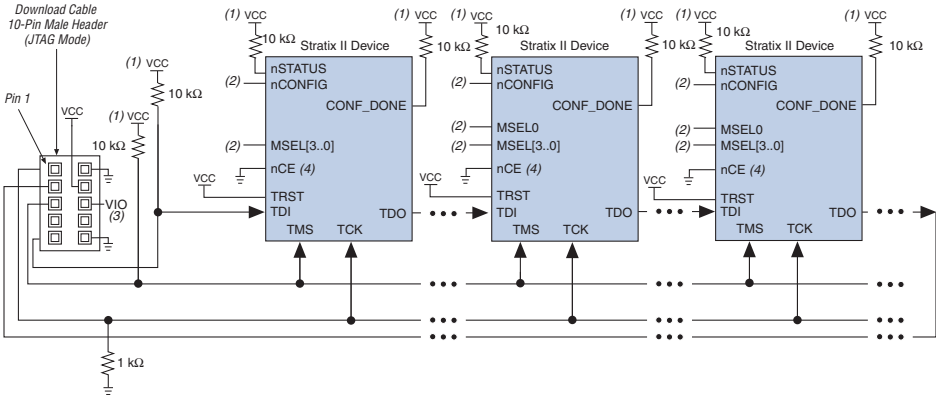

Notes to Figure 7–36:

(1) The pull-up resistor should be connected to the same supply voltage as the USB Blaster, MasterBlaster (V_{IO} pin), ByteBlaster II or ByteBlasterMV cable.

(2) The `nCONFIG, MSEL[3..0]` pins should be connected to support a non-JTAG configuration scheme. If only JTAG configuration is used, connect `nCONFIG` to V_{CC}, and `MSEL[3..0]` to ground. Pull `DCLK` either high or low, whichever is convenient on your board.

(3) Pin 6 of the header is a V_{IO} reference voltage for the MasterBlaster output driver. V_{IO} should match the device's V_{CCIO}. Refer to the *MasterBlaster Serial/USB Communications Cable User Guide* for this value. In the ByteBlasterMV cable, this pin is a no connect. In the USB Blaster and ByteBlaster II cables, this pin is connected to `nCE` when it is used for active serial programming, otherwise it is a no connect.

(4) `nCE` must be connected to GND or driven low for successful JTAG configuration.

The `nCE` pin must be connected to GND or driven low during JTAG configuration. In multi-device FPP, AS, PS, and PPA configuration chains, the first device's `nCE` pin is connected to GND while its `nCEO` pin is connected to `nCE` of the next device in the chain. The last device's `nCE` input comes from the previous device, while its `nCEO` pin is left floating. In addition, the `CONF_DONE` and `nSTATUS` signals are all shared in multi-device FPP, AS, PS, or PPA configuration chains so the devices can enter user mode at the same time after configuration is complete. When the `CONF_DONE` and `nSTATUS` signals are shared among all the devices, every device must be configured when JTAG configuration is performed.

If you only use JTAG configuration, Altera recommends that you connect the circuitry as shown in Figure 7–36, where each of the `CONF_DONE` and `nSTATUS` signals are isolated, so that each device can enter user mode individually.

After the first device completes configuration in a multi-device configuration chain, its nCEO pin drives low to activate the second device's nCE pin, which prompts the second device to begin configuration. Therefore, if these devices are also in a JTAG chain, make sure the nCE pins are connected to GND during JTAG configuration or that the devices are JTAG configured in the same order as the configuration chain. As long as the devices are JTAG configured in the same order as the multi-device configuration chain, the nCEO of the previous device will drive nCE of the next device low when it has successfully been JTAG configured.

Other Altera devices that have JTAG support can be placed in the same JTAG chain for device programming and configuration.



Stratix, Stratix II, Stratix II GX, Cyclone™, and Cyclone II devices must be within the first 17 devices in a JTAG chain. All of these devices have the same JTAG controller. If any of the Stratix, Stratix II, Stratix II GX, Cyclone, and Cyclone II devices are in the 18th or after they will fail configuration. This does not affect SignalTap® II.



For more information on configuring multiple Altera devices in the same configuration chain, refer to the *Configuring Mixed Altera FPGA Chains* chapter in the *Configuration Handbook*.

Figure 7–37 shows JTAG configuration of a Stratix II or Stratix II GX device with a microprocessor.

Figure 7–37. JTAG Configuration of a Single Device Using a Microprocessor

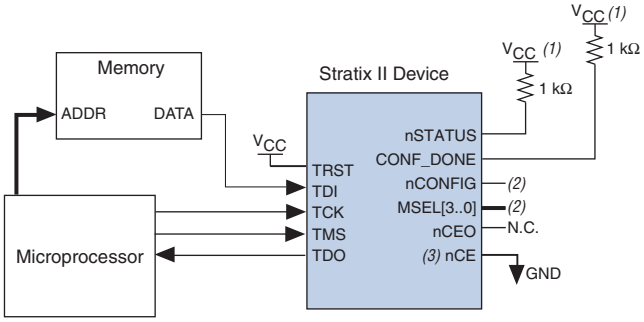

Notes to Figure 7–37:

(1) The pull-up resistor should be connected to a supply that provides an acceptable input signal for all devices in the chain. V_{CC} should be high enough to meet the V_{IH} specification of the I/O on the device.

(2) The `nCONFIG`, `MSEL[3..0]` pins should be connected to support a non-JTAG configuration scheme. If only JTAG configuration is used, connect `nCONFIG` to V_{CC}, and `MSEL[3..0]` to ground. Pull `DCLK` either high or low, whichever is convenient on your board.

(3) `nCE` must be connected to GND or driven low for successful JTAG configuration.

Jam STAPL

Jam STAPL, JEDEC standard JESD-71, is a standard file format for in-system programmability (ISP) purposes. Jam STAPL supports programming or configuration of programmable devices and testing of electronic systems, using the IEEE 1149.1 JTAG interface. Jam STAPL is a freely licensed open standard.

The Jam Player provides an interface for manipulating the IEEE Std. 1149.1 JTAG TAP state machine.

For more information on JTAG and Jam STAPL in embedded environments, refer to *AN 122: Using Jam STAPL for ISP & ICR via an Embedded Processor*. To download the jam player, visit the Altera web site at www.altera.com.

Device Configuration Pins

The following tables describe the connections and functionality of all the configuration related pins on the Stratix II and Stratix II GX devices. Table 7–21 summarizes the Stratix II pin configuration.

Table 7–21. Stratix II Configuration Pin Summary (Part 1 of 2) *Note (1)*

Bank	Description	Input/Output	Dedicated	Powered By	Configuration Mode
3	PGM[2..0]	Output		*(2)*	PS, FPP, PPA, RU, LU
3	ASDO	Output		*(2)*	AS
3	nCSO	Output		*(2)*	AS
3	CRC_ERROR	Output		*(2)*	Optional, all modes
3	DATA0	Input		*(3)*	All modes except JTAG
3	DATA[7..1]	Input		*(3)*	FPP, PPA
3	DATA7	Bidirectional		*(2)*, *(3)*	PPA
3	RDYnBSY	Output		*(2)*	PPA
3	INIT_DONE	Output		Pull-up	Optional, all modes
3	nSTATUS	Bidirectional	Yes	Pull-up	All modes
3	nCE	Input	Yes	*(3)*	All modes
3	DCLK	Input	Yes	*(3)*	PS, FPP
		Output		*(2)*	AS
3	CONF_DONE	Bidirectional	Yes	Pull-up	All modes
8	TDI	Input	Yes	VCCPD	JTAG
8	TMS	Input	Yes	VCCPD	JTAG
8	TCK	Input	Yes	VCCPD	JTAG
8	TRST	Input	Yes	VCCPD	JTAG
8	nCONFIG	Input	Yes	*(3)*	All modes
8	VCCSEL	Input	Yes	VCCINT	All modes
8	CS	Input		*(3)*	PPA
8	CLKUSR	Input		*(3)*	Optional
8	nWS	Input		*(3)*	PPA
8	nRS	Input		*(3)*	PPA
8	RUnLU	Input		*(3)*	PS, FPP, PPA, RU, LU
8	nCS	Input		*(3)*	PPA
7	PORSEL	Input	Yes	VCCINT	All modes
7	nIO_PULLUP	Input	Yes	VCCINT	All modes

Table 7–21. Stratix II Configuration Pin Summary (Part 2 of 2) *Note (1)*

Bank	Description	Input/Output	Dedicated	Powered By	Configuration Mode
7	PLL_ENA	Input	Yes	*(3)*	Optional
7	nCEO	Output	Yes	*(2)*, *(4)*	All modes
4	MSEL[3..0]	Input	Yes	VCCINT	All modes
4	TDO	Output	Yes	*(2)*, *(4)*	JTAG

Notes to Table 7–21:

(1) Total number of pins is 41, total number of dedicated pins is 19.

(2) All outputs are powered by VCCIO except as noted.

(3) All inputs are powered by VCCIO or VCCPD, based on the VCCSEL setting, except as noted.

(4) An external pull-up resistor may be required for this configuration pin because of the multivolt I/O interface. Refer to the *Stratix II Architecture* chapter in volume 1 of the *Stratix II Device Handbook* for pull-up or level shifter recommendations for nCEO and TDO.

Figure 7–38 shows the I/O bank locations.

Figure 7–38. Stratix II I/O Bank Numbers

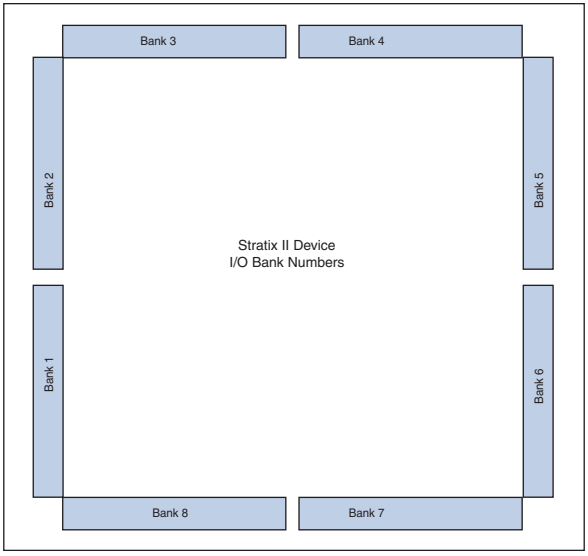

Table 7–22 describes the dedicated configuration pins, which are required to be connected properly on your board for successful configuration. Some of these pins may not be required for your configuration schemes.

Table 7–22. Dedicated Configuration Pins on the Stratix II and Stratix II GX Device (Part 1 of 10)

Pin Name	User Mode	Configuration Scheme	Pin Type	Description
V_{CCPD}	N/A	All	Power	Dedicated power pin. This pin is used to power the I/O pre-drivers, the JTAG input pins, and the configuration input pins that are affected by the voltage level of VCCSEL. This pin must be connected to 3.3-V. V_{CCPD} must ramp-up from 0-V to 3.3-V within 100 ms. If V_{CCPD} is not ramped up within this specified time, your Stratix II or Stratix II GX device will not configure successfully. If your system does not allow for a V_{CCPD} ramp-up time of 100 ms or less, you must hold nCONFIG low until all power supplies are stable.
VCCSEL	N/A	All	Input	Dedicated input that selects which input buffer is used on the PLL_ENA pin and the configuration input pins; nCONFIG, DCLK (when used as an input), nSTATUS (when used as an input), CONF_DONE (when used as an input), DEV_OE, DEV_CLRn, DATA[7..0], RUnLU, nCE, nWS, nRS, CS, nCS, and CLKUSR. The 3.3-V/2.5-V input buffer is powered by V_{CCPD}, while the 1.8-V/1.5-V input buffer is powered by V_{CCIO}. The VCCSEL input buffer has an internal 5-kΩ pull-down resistor that is always active. The VCCSEL input buffer is powered by V_{CCINT} and must be hardwired to V_{CCPD} or ground. A logic high selects the 1.8-V/1.5-V input buffer, and a logic low selects the 3.3-V/2.5-V input buffer. For more information, refer to the "VCCSEL Pin" section.

Table 7–22. Dedicated Configuration Pins on the Stratix II and Stratix II GX Device (Part 2 of 10)

Pin Name	User Mode	Configuration Scheme	Pin Type	Description
PORSEL	N/A	All	Input	Dedicated input which selects between a POR time of 12 ms or 100 ms. A logic high (1.5 V, 1.8 V, 2.5 V, 3.3 V) selects a POR time of about 12 ms and a logic low selects POR time of about 100 ms. The PORSEL input buffer is powered by V_{CCINT} and has an internal 5-kΩ pull-down resistor that is always active. The PORSEL pin should be tied directly to V_{CCPD} or GND.
nIO_PULLUP	N/A	All	Input	Dedicated input that chooses whether the internal pull-up resistors on the user I/O pins and dual-purpose I/O pins (nCS0, nASD0, DATA[7..0], nWS, nRS, RDYnBSY, nCS, CS, RUnLU, PGM[], CLKUSR, INIT_DONE, DEV_OE, DEV_CLR) are on or off before and during configuration. A logic high (1.5 V, 1.8 V, 2.5 V, 3.3 V) turns off the weak internal pull-up resistors, while a logic low turns them on. The nIO-PULLUP input buffer is powered by V_{CCPD} and has an internal 5-kΩ pull-down resistor that is always active. The nIO-PULLUP can be tied directly to V_{CCPD} or use a 1-kΩ pull-up resistor or tied directly to GND.
MSEL[3..0]	N/A	All	Input	4-bit configuration input that sets the Stratix II and Stratix II GX device configuration scheme. Refer to Table 7–1 for the appropriate connections. These pins must be hard-wired to V_{CCPD} or GND. The MSEL[3..0] pins have internal 5-kΩ pull-down resistors that are always active.

Table 7–22. Dedicated Configuration Pins on the Stratix II and Stratix II GX Device (Part 3 of 10)

Pin Name	User Mode	Configuration Scheme	Pin Type	Description
nCONFIG	N/A	All	Input	Configuration control input. Pulling this pin low during user-mode will cause the device to lose its configuration data, enter a reset state, tri-state all I/O pins. Returning this pin to a logic high level will initiate a reconfiguration. If your configuration scheme uses an enhanced configuration device or EPC2 device, nCONFIG can be tied directly to V_{CC} or to the configuration device's nINIT_CONF pin.
nSTATUS	N/A	All	Bidirectional open-drain	The device drives nSTATUS low immediately after power-up and releases it after the POR time. Status output. If an error occurs during configuration, nSTATUS is pulled low by the target device. Status input. If an external source drives the nSTATUS pin low during configuration or initialization, the target device enters an error state. Driving nSTATUS low after configuration and initialization does not affect the configured device. If a configuration device is used, driving nSTATUS low will cause the configuration device to attempt to configure the device, but since the device ignores transitions on nSTATUS in user-mode, the device does not reconfigure. To initiate a reconfiguration, nCONFIG must be pulled low. The enhanced configuration devices' and EPC2 devices' OE and nCS pins have optional internal programmable pull-up resistors. If internal pull-up resistors on the enhanced configuration device are used, external 10-kΩ pull-up resistors should not be used on these pins. When using EPC2 devices, only external 10-kΩ pull-up resistors should be used.

Table 7–22. Dedicated Configuration Pins on the Stratix II and Stratix II GX Device (Part 4 of 10)

Pin Name	User Mode	Configuration Scheme	Pin Type	Description
nSTATUS (continued)				If VCCPD and VCCIO are not fully powered up, the following could occur: • VCCPD and VCCIO are powered high enough for the nSTATUS buffer to function properly, and nSTATUS is driven low. When VCCPD and VCCIO are ramped up, POR trips, and nSTATUS is released after POR expires. • VCCPD and VCCIO are not powered high enough for the nSTATUS buffer to function properly. In this situation, nSTATUS might appear logic high, triggering a configuration attempt that would fail because POR did not yet trip. When VCCPD and VCCIO are powered up, nSTATUS is pulled low because POR did not yet trip. When POR trips after VCCPD and VCCIO are powered up, nSTATUS is released and pulled high. At that point, reconfiguration is triggered and the device is configured.

Table 7–22. Dedicated Configuration Pins on the Stratix II and Stratix II GX Device (Part 5 of 10)

Pin Name	User Mode	Configuration Scheme	Pin Type	Description
CONF_DONE	N/A	All	Bidirectional open-drain	Status output. The target device drives the CONF_DONE pin low before and during configuration. Once all configuration data is received without error and the initialization cycle starts, the target device releases CONF_DONE. Status input. After all data is received and CONF_DONE goes high, the target device initializes and enters user mode. The CONF_DONE pin must have an external 10-kΩ pull-up resistor in order for the device to initialize. Driving CONF_DONE low after configuration and initialization does not affect the configured device. The enhanced configuration devices' and EPC2 devices' OE and nCS pins have optional internal programmable pull-up resistors. If internal pull-up resistors on the enhanced configuration device are used, external 10-kΩ pull-up resistors should not be used on these pins. When using EPC2 devices, only external 10-kΩ pull-up resistors should be used.
nCE	N/A	All	Input	Active-low chip enable. The nCE pin activates the device with a low signal to allow configuration. The nCE pin must be held low during configuration, initialization, and user mode. In single device configuration, it should be tied low. In multi-device configuration, nCE of the first device is tied low while its nCEO pin is connected to nCE of the next device in the chain. The nCE pin must also be held low for successful JTAG programming of the device.

Table 7–22. Dedicated Configuration Pins on the Stratix II and Stratix II GX Device (Part 6 of 10)

Pin Name	User Mode	Configuration Scheme	Pin Type	Description
nCE0	N/A	All	Output	Output that drives low when device configuration is complete. In single device configuration, this pin is left floating. In multi-device configuration, this pin feeds the next device's nCE pin. The nCE0 of the last device in the chain is left floating. The nCE0 pin is powered by V_{CCIO} in I/O bank 7. For recommendations on how to connect nCE0 in a chain with multiple voltages across the devices in the chain, refer to the *Stratix II Architecture* chapter in volume 1 of the *Stratix II Handbook* or the *Stratix II GX Architecture* chapter in volume 1 of the *Stratix II GX Device Handbook*.
ASD0	N/A in AS mode I/O in non-AS mode	AS	Output	Control signal from the Stratix II or Stratix II GX device to the serial configuration device in AS mode used to read out configuration data. In AS mode, ASD0 has an internal pull-up resistor that is always active.
nCS0	N/A in AS mode I/O in non-AS mode	AS	Output	Output control signal from the Stratix II or Stratix II GX device to the serial configuration device in AS mode that enables the configuration device. In AS mode, nCS0 has an internal pull-up resistor that is always active.

Table 7–22. Dedicated Configuration Pins on the Stratix II and Stratix II GX Device (Part 7 of 10)

Pin Name	User Mode	Configuration Scheme	Pin Type	Description
DCLK	N/A	Synchronous configuration schemes (PS, FPP, AS)	Input (PS, FPP) Output (AS)	In PS and FPP configuration, DCLK is the clock input used to clock data from an external source into the target device. Data is latched into the device on the rising edge of DCLK. In AS mode, DCLK is an output from the Stratix II or Stratix II GX device that provides timing for the configuration interface. In AS mode, DCLK has an internal pull-up resistor (typically 25 kΩ) that is always active. In PPA mode, DCLK should be tied high to V_{CC} to prevent this pin from floating. After configuration, this pin is tri-stated. In schemes that use a configuration device, DCLK will be driven low after configuration is done. In schemes that use a control host, DCLK should be driven either high or low, whichever is more convenient. Toggling this pin after configuration does not affect the configured device.
DATA0	I/O	PS, FPP, PPA, AS	Input	Data input. In serial configuration modes, bit-wide configuration data is presented to the target device on the DATA0 pin. The V_{IH} and V_{IL} levels for this pin are dependent on the input buffer selected by the VCCSEL pin. Refer to the section "VCCSEL Pin" on page 7–10 for more information. In AS mode, DATA0 has an internal pull-up resistor that is always active. After configuration, DATA0 is available as a user I/O pin and the state of this pin depends on the **Dual-Purpose Pin** settings. After configuration, EPC1 and EPC1441 devices tri-state this pin, while enhanced configuration and EPC2 devices drive this pin high.

Table 7–22. Dedicated Configuration Pins on the Stratix II and Stratix II GX Device (Part 8 of 10)

Pin Name	User Mode	Configuration Scheme	Pin Type	Description
DATA[7..1]	I/O	Parallel configuration schemes (FPP and PPA)	Inputs	Data inputs. Byte-wide configuration data is presented to the target device on DATA[7..0]. The V_{IH} and V_{IL} levels for this pin are dependent on the input buffer selected by the VCCSEL pin. Refer to the section "VCCSEL Pin" on page 7–10 for more information. In serial configuration schemes, they function as user I/O pins during configuration, which means they are tri-stated. After PPA or FPP configuration, DATA[7..1] are available as user I/O pins and the state of these pin depends on the **Dual-Purpose Pin** settings.
DATA7	I/O	PPA	Bidirectional	In the PPA configuration scheme, the DATA7 pin presents the RDYnBSY signal after the nRS signal has been strobed low. The V_{IH} and V_{IL} levels for this pin are dependent on the input buffer selected by the VCCSEL pin. Refer to the section "VCCSEL Pin" on page 7–10 for more information. In serial configuration schemes, it functions as a user I/O pin during configuration, which means it is tri-stated. After PPA configuration, DATA7 is available as a user I/O and the state of this pin depends on the **Dual-Purpose Pin** settings.
nWS	I/O	PPA	Input	Write strobe input. A low-to-high transition causes the device to latch a byte of data on the DATA[7..0] pins. In non-PPA schemes, it functions as a user I/O pin during configuration, which means it is tri-stated. After PPA configuration, nWS is available as a user I/O pins and the state of this pin depends on the **Dual-Purpose Pin** settings.

Table 7–22. Dedicated Configuration Pins on the Stratix II and Stratix II GX Device (Part 9 of 10)

Pin Name	User Mode	Configuration Scheme	Pin Type	Description
nRS	I/O	PPA	Input	Read strobe input. A low input directs the device to drive the RDYnBSY signal on the DATA7 pin. If the nRS pin is not used in PPA mode, it should be tied high. In non-PPA schemes, it functions as a user I/O during configuration, which means it is tri-stated. After PPA configuration, nRS is available as a user I/O pin and the state of this pin depends on the **Dual-Purpose Pin** settings.
RDYnBSY	I/O	PPA	Output	Ready output. A high output indicates that the target device is ready to accept another data byte. A low output indicates that the target device is busy and not ready to receive another data byte. In PPA configuration schemes, this pin will drive out high after power-up, before configuration and after configuration before entering user-mode. In non-PPA schemes, it functions as a user I/O pin during configuration, which means it is tri-stated. After PPA configuration, RDYnBSY is available as a user I/O pin and the state of this pin depends on the **Dual-Purpose Pin** settings.

Table 7–22. Dedicated Configuration Pins on the Stratix II and Stratix II GX Device (Part 10 of 10)

Pin Name	User Mode	Configuration Scheme	Pin Type	Description
nCS/CS	I/O	PPA	Input	Chip-select inputs. A low on nCS and a high on CS select the target device for configuration. The nCS and CS pins must be held active during configuration and initialization. During the PPA configuration mode, it is only required to use either the nCS or CS pin. Therefore, if only one chip-select input is used, the other must be tied to the active state. For example, nCS can be tied to ground while CS is toggled to control configuration. In non-PPA schemes, it functions as a user I/O pin during configuration, which means it is tri-stated. After PPA configuration, nCS and CS are available as user I/O pins and the state of these pins depends on the **Dual-Purpose Pin** settings.
RUnLU	N/A if using Remote System Upgrade I/O if not	Remote System Upgrade in FPP, PS or PPA	Input	Input that selects between remote update and local update. A logic high (1.5-V, 1.8-V, 2.5-V, 3.3-V) selects remote update and a logic low selects local update. When not using remote update or local update configuration modes, this pin is available as general-purpose user I/O pin.
PGM[2..0]	N/A if using Remote System Upgrade I/O if not using	Remote System Upgrade in FPP, PS or PPA	Output	These output pins select one of eight pages in the memory (either flash or enhanced configuration device) when using a remote system upgrade mode. When not using remote update or local update configuration modes, these pins are available as general-purpose user I/O pins.

Table 7–23 describes the optional configuration pins. If these optional configuration pins are not enabled in the Quartus II software, they are available as general-purpose user I/O pins. Therefore, during configuration, these pins function as user I/O pins and are tri-stated with weak pull-up resistors.

Table 7–23. Optional Configuration Pins

Pin Name	User Mode	Pin Type	Description
CLKUSR	N/A if option is on. I/O if option is off.	Input	Optional user-supplied clock input synchronizes the initialization of one or more devices. This pin is enabled by turning on the **Enable user-supplied start-up clock** (**CLKUSR**) option in the Quartus II software.
INIT_DONE	N/A if option is on. I/O if option is off.	Output open-drain	Status pin can be used to indicate when the device has initialized and is in user mode. When nCONFIG is low and during the beginning of configuration, the INIT_DONE pin is tri-stated and pulled high due to an external 10-kΩ pull-up resistor. Once the option bit to enable INIT_DONE is programmed into the device (during the first frame of configuration data), the INIT_DONE pin will go low. When initialization is complete, the INIT_DONE pin will be released and pulled high and the device enters user mode. Thus, the monitoring circuitry must be able to detect a low-to-high transition. This pin is enabled by turning on the **Enable INIT_DONE output** option in the Quartus II software.
DEV_OE	N/A if option is on. I/O if option is off.	Input	Optional pin that allows the user to override all tri-states on the device. When this pin is driven low, all I/O pins are tri-stated; when this pin is driven high, all I/O pins behave as programmed. This pin is enabled by turning on the **Enable device-wide output enable** (**DEV_OE**) option in the Quartus II software.
DEV_CLRn	N/A if option is on. I/O if option is off.	Input	Optional pin that allows you to override all clears on all device registers. When this pin is driven low, all registers are cleared; when this pin is driven high, all registers behave as programmed. This pin is enabled by turning on the **Enable device-wide reset** (**DEV_CLRn**) option in the Quartus II software.

Table 7–24 describes the dedicated JTAG pins. JTAG pins must be kept stable before and during configuration to prevent accidental loading of JTAG instructions. The TDI, TMS, and TRST have weak internal pull-up resistors (typically 25 kΩ) while TCK has a weak internal pull-down resistor. If you plan to use the SignalTap embedded logic array analyzer, you need to connect the JTAG pins of the Stratix II or Stratix II GX device to a JTAG header on your board.

Table 7–24. Dedicated JTAG Pins (Part 1 of 2)

Pin Name	User Mode	Pin Type	Description
TDI	N/A	Input	Serial input pin for instructions as well as test and programming data. Data is shifted in on the rising edge of TCK. The TDI pin is powered by the 3.3-V V_{CCPD} supply. If the JTAG interface is not required on the board, the JTAG circuitry can be disabled by connecting this pin to V_{CC}.
TDO	N/A	Output	Serial data output pin for instructions as well as test and programming data. Data is shifted out on the falling edge of TCK. The pin is tri-stated if data is not being shifted out of the device. The TDO pin is powered by V_{CCIO} in I/O bank 4. For recommendations on connecting a JTAG chain with multiple voltages across the devices in the chain, refer to the *IEEE 1149.1 (JTAG) Boundary Scan Testing in Stratix II & Stratix II GX Devices* chapter in volume 2 of the *Stratix II Handbook* or the *IEEE 1149.1 (JTAG) Boundary Scan Testing in Stratix II & Stratix II GX Devices* chapter in volume 2 of the *Stratix II GX Device Handbook*. If the JTAG circuitry is not used, leave the TDO pin unconnected.
TMS	N/A	Input	Input pin that provides the control signal to determine the transitions of the TAP controller state machine. Transitions within the state machine occur on the rising edge of TCK. Therefore, TMS must be set up before the rising edge of TCK. TMS is evaluated on the rising edge of TCK. The TMS pin is powered by the 3.3-V V_{CCPD} supply. If the JTAG interface is not required on the board, the JTAG circuitry can be disabled by connecting this pin to V_{CC}.

Table 7–24. Dedicated JTAG Pins (Part 2 of 2)

Pin Name	User Mode	Pin Type	Description
TCK	N/A	Input	The clock input to the BST circuitry. Some operations occur at the rising edge, while others occur at the falling edge. The TCK pin is powered by the 3.3-V V_{CCPD} supply. If the JTAG interface is not required on the board, the JTAG circuitry can be disabled by connecting TCK to GND.
TRST	N/A	Input	Active-low input to asynchronously reset the boundary-scan circuit. The TRST pin is optional according to IEEE Std. 1149.1. The TRST pin is powered by the 3.3-V V_{CCPD} supply. If the JTAG interface is not required on the board, the JTAG circuitry can be disabled by connecting the TRST pin to GND.

Conclusion

Stratix II and Stratix II GX devices can be configured in a number of different schemes to fit your system's need. In addition, configuration bitstream encryption, configuration data decompression, and remote system upgrade support supplement the Stratix II and Stratix II GX configuration solution.

Referenced Documents

This chapter references the following documents:

- *AN 122: Using Jam STAPL for ISP & ICR via an Embedded Processor*
- *AN 418: SRunner: An Embedded Solution for Serial Configuration Device Programming*
- *ByteBlaster II Download Cable User Guide*
- *ByteBlasterMV Download Cable User Guide*
- *Configuration Devices for SRAM-Based LUT Devices Data Sheet* chapter in volume 2 of the *Configuration Handbook*.
- *Configuring Mixed Altera FPGA Chains* in volume 2 of the *Configuration Handbook*
- *DC & Switching Characteristics* chapter in volume 1 of the *Stratix II Device Handbook*
- *DC & Switching Characteristics* chapter in volume 1 of the *Stratix II GX Device Handbook*
- *Enhanced Configuration Devices (EPC4, EPC8 & EPC16) Data Sheet* in volume 2 of the *Configuration Handbook*
- *IEEE 1149.1 (JTAG) Boundary-Scan Testing in Stratix II & Stratix II GX Devices* chapter in volume 2 of the *Stratix II Device Handbook*
- *IEEE 1149.1 (JTAG) Boundary-Scan Testing in Stratix II & Stratix II GX Devices* chapter in volume 2 of the *Stratix II GX Device Handbook*
- *Jam Programming Support - JTAG Technologies*
- *MasterBlaster Serial/USB Communications Cable User Guide*

- *Remote System Upgrades With Stratix II & Stratix II GX Devices* chapter in volume 2 of the *Stratix II Device Handbook*
- *Remote System Upgrades With Stratix II & Stratix II GX Devices* chapter in volume 2 of the *Stratix II GX Device Handbook*.
- *USB-Blaster Download Cable User Guide*
- *Serial Configuration Devices (EPCS1, EPCS4, EPCS16, EPCS64, and EPCS128) Data Sheet* chapter in volume 2 of the *Configuration Handbook*.
- *Software Settings* in volume 2 of the *Configuration Handbook*
- *Stratix II GX Architecture* chapter in volume 1 of the *Stratix II GX Device Handbook*
- *Stratix II Device Handbook*
- *Stratix II GX Device Handbook*

Document Revision History

Table 7–25 shows the revision history for this chapter.

Table 7–25. Document Revision History (Part 1 of 2)

Date and Document Version	Changes Made	Summary of Changes
January 2008, v4.5	Updated RUnLU and PGM[2..0] information in Table 7–22.	—
	Updated handnote in "Configuration Data Decompression" section.	
	Updated Notes in: • Table 7–3 • Table 7–10 • Table 7–12 • Table 7–15 • Table 7–18	—
	Updated TDO row for Tables 7–19 and 7–24.	—
	Added the "Referenced Documents" section.	—
	Minor text edits.	—
No change	For the *Stratix II GX Device Handbook* only: Formerly chapter 12. The chapter number changed due to the addition of the *Stratix II GX Dynamic Reconfiguration* chapter. No content change.	—

Table 7–25. Document Revision History (Part 2 of 2)

Date and Document Version	Changes Made	Summary of Changes
May 2007, v4.4	• Updated "Power-On Reset Circuit" section • Updated "VCCSEL Pin" section • Updated "Configuration Data Decompression" section • Updated "Active Serial Configuration (Serial Configuration Devices)" section • Updated "Output Configuration Pins" section	—
	Added notes to "FPP Configuration Using a MAX II Device as an External Host" and "Passive Parallel Asynchronous Configuration" section.	—
	• Updated Table 13–5 • Updated Table 13–6 • Updated Table 13–8 • Updated Table 13–11	—
	Removed Table 7-7.	—
	Added new "Output Configuration Pins" section.	—
	Corrected typo in "Configuration Devices" section.	—
	Corrected CONF_DONE in Table 13–22.	—
February 2007 v4.3	Added the "Document Revision History" section to this chapter.	—
April 2006, v4.2	Chapter updated as part of the *Stratix II Device Handbook* update.	—
No change	Formerly chapter 11. Chapter number change only due to chapter addition to Section I in February 2006; no content change.	—
December 2005, v4.1	Chapter updated as part of the *Stratix II Device Handbook* update.	—
October 2005 v4.0	Added chapter to the *Stratix II GX Device Handbook*.	—

8. Remote System Upgrades with Stratix II and Stratix II GX Devices

SII52008-4.5

Introduction

System designers today face difficult challenges such as shortened design cycles, evolving standards, and system deployments in remote locations. Stratix® II and Stratix II GX FPGAs help overcome these challenges with their inherent re-programmability and dedicated circuitry to perform remote system upgrades. Remote system upgrades help deliver feature enhancements and bug fixes without costly recalls, reduce time-to-market, and extend product life.

Stratix II and Stratix II GX FPGAs feature dedicated remote system upgrade circuitry. Soft logic (either the Nios® embedded processor or user logic) implemented in a Stratix II or Stratix II GX device can download a new configuration image from a remote location, store it in configuration memory, and direct the dedicated remote system upgrade circuitry to initiate a reconfiguration cycle. The dedicated circuitry performs error detection during and after the configuration process, recovers from any error condition by reverting back to a safe configuration image, and provides error status information. This dedicated remote system upgrade circuitry is unique to Stratix, Stratix II, and Stratix II GX FPGAs and helps to avoid system downtime.

Remote system upgrade is supported in all Stratix II and Stratix II GX configuration schemes: fast passive parallel (FPP), active serial (AS), passive serial (PS), and passive parallel asynchronous (PPA). Remote system upgrade can also be implemented in conjunction with advanced Stratix II and Stratix II GX features such as real-time decompression of configuration data and design security using the advanced encryption standard (AES) for secure and efficient field upgrades.

This chapter describes the functionality and implementation of the dedicated remote system upgrade circuitry. It also defines several concepts related to remote system upgrade, including factory configuration, application configuration, remote update mode, local update mode, the user watchdog timer, and page mode operation. Additionally, this chapter provides design guidelines for implementing remote system upgrade with the various supported configuration schemes.

Functional Description

The dedicated remote system upgrade circuitry in Stratix II and Stratix II GX FPGAs manages remote configuration and provides error detection, recovery, and status information. User logic or a Nios processor implemented in the FPGA logic array provides access to the remote configuration data source and an interface to the system's configuration memory.

Stratix II and Stratix II GX FPGA's remote system upgrade process involves the following steps:

1. A Nios processor (or user logic) implemented in the FPGA logic array receives new configuration data from a remote location. The connection to the remote source is a communication protocol such as the transmission control protocol/Internet protocol (TCP/IP), peripheral component interconnect (PCI), user datagram protocol (UDP), universal asynchronous receiver/transmitter (UART), or a proprietary interface.

2. The Nios processor (or user logic) stores this new configuration data in non-volatile configuration memory. The non-volatile configuration memory can be any standard flash memory used in conjunction with an intelligent host (for example, a MAX® device or microprocessor), the serial configuration device, or the enhanced configuration device.

3. The Nios processor (or user logic) initiates a reconfiguration cycle with the new or updated configuration data.

4. The dedicated remote system upgrade circuitry detects and recovers from any error(s) that might occur during or after the reconfiguration cycle, and provides error status information to the user design.

Figure 8–1 shows the steps required for performing remote configuration updates. (The numbers in the figure below coincide with the steps above.)

Figure 8–1. Functional Diagram of Stratix II or Stratix II GX Remote System Upgrade

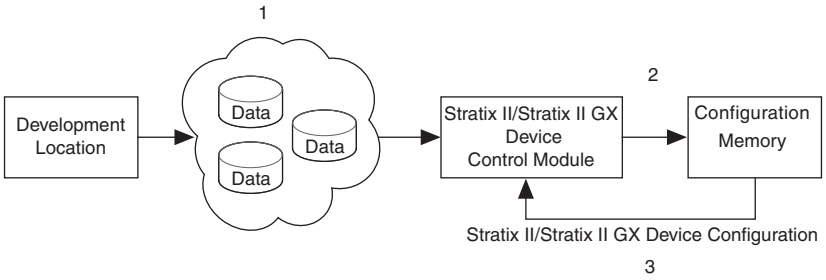

Stratix II and Stratix II GX FPGAs support remote system upgrade in the FPP, AS, PS, and PPA configuration schemes.

- Serial configuration devices use the AS scheme to configure Stratix II and Stratix II GX FPGAs.
- A MAX II device (or microprocessor and flash configuration schemes) uses FPP, PS, or PPA schemes to configure Stratix II and Stratix II GX FPGAs.
- Enhanced configuration devices use the FPP or PS configuration schemes to configure Stratix II and Stratix II GX FPGAs.

The JTAG-based configuration scheme does not support remote system upgrade.

Figure 8–2 shows the block diagrams for implementing remote system upgrade with the various Stratix II and Stratix II GX configuration schemes.

Figure 8–2. Remote System Upgrade Block Diagrams for Various Stratix II and Stratix II GS Configuration Schemes

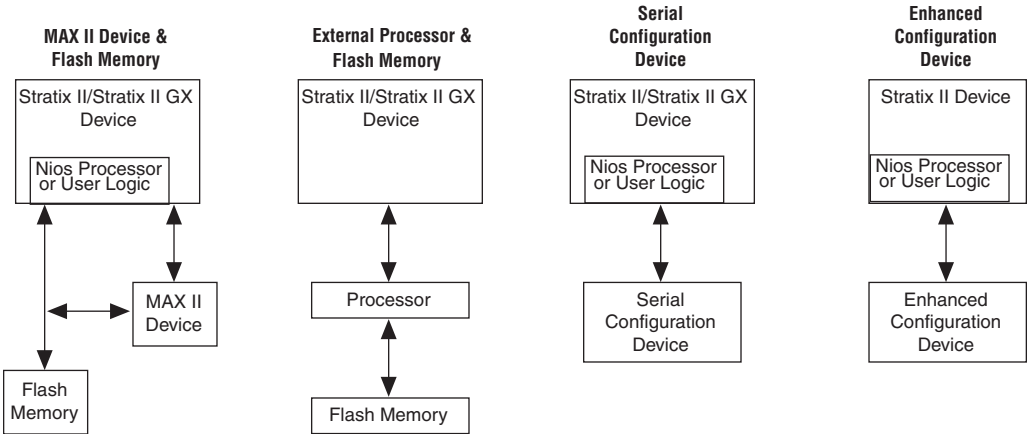

For the active serial configuration scheme, the remote system upgrade only supports single device configurations.

You must set the mode select pins (`MSEL[3..0]`) and the `RUnLU` pin to select the configuration scheme and remote system upgrade mode best suited for your system. Table 8–1 lists the pin settings for Stratix II and Stratix II GX FPGAs. Standard configuration mode refers to normal FPGA configuration mode with no support for remote system upgrades, and the remote system upgrade circuitry is disabled. The following sections describe the local update and remote update remote system upgrade modes.



For more information on standard configuration schemes supported in Stratix II and Stratix II GX FPGAs, see the *Configuring Stratix II & Stratix II GX Devices* chapter in volume 2 of the *Stratix II Handbook* and the *Configuring Stratix II & Stratix II GX Devices* chapter in volume 2 of the *Stratix II GX Handbook*.

Table 8–1. Stratix II and Stratix II GX Remote System Upgrade Modes

Configuration Scheme	MSEL[3..0]	RUnLU	Remote System Upgrade Mode
FPP	0000	-	Standard
	0100 *(1)*	0	Local update
	0100 *(1)*	1	Remote update
FPP with decompression and/or design security feature enabled *(2)*	1011	-	Standard
	1100 *(1)*	0	Local update
	1100 *(1)*	1	Remote update
Fast AS (40 MHz) *(3)*	1000	-	Standard
	1001	1	Remote update
AS (20 MHz) *(3)*	1101	-	Standard
	1110	1	Remote update
PS	0010	-	Standard
	0110 *(1)*	0	Local update
	0110 *(1)*	1	Remote update
PPA	0001	-	Standard
	0101 *(1)*	0	Local update
	0101 *(1)*	1	Remote update

Notes to Table 8–1:

(1) These schemes require that you drive the RUnLU pin to specify either remote update or local update mode. AS schemes only support the remote update mode.

(2) These modes are only supported when using a MAX II device or microprocessor and flash for configuration. In these modes, the host system must output a DCLK that is 4 x the data rate.

(3) The EPCS16 and EPCS64 serial configuration devices support a DCLK up to 40 MHz; other EPCS devices support a DCLK up to 20 MHz. See the *Serial Configuration Devices (EPCS1, EPCS4, EPCS16, EPCS64, and EPCS128) Data Sheet* in volume 2 of the *Configuration Handbook* for more information.

Configuration Image Types and Pages

When using remote system upgrade, FPGA configuration bitstreams are classified as factory configuration images or application configuration images. An image, also referred to as a configuration, is a design loaded into the FPGA that performs certain user-defined functions. Each FPGA in your system requires one factory image and one or more application

images. The factory image is a user-defined fall-back, or safe, configuration and is responsible for administering remote updates in conjunction with the dedicated circuitry. Application images implement user-defined functionality in the target FPGA.

A remote system update involves storing a new application configuration image or updating an existing one via the remote communication interface. After an application configuration image is stored or updated remotely, the user design in the FPGA initiates a reconfiguration cycle with the new image. Any errors during or after this cycle are detected by the dedicated remote system upgrade circuitry and cause the FPGA to automatically revert to the factory image. The factory image then performs error processing and recovery. While error processing functionality is limited to the factory configuration, both factory and application configurations can download and store remote updates and initiate system reconfiguration.

Stratix II and Stratix II GX FPGAs select between the different configuration images stored in the system configuration memory using the page address pins or start address registers. A page is a section of the configuration memory space that contains one configuration image for each FPGA in the system. One page stores one system configuration, regardless of the number of FPGAs in the system.

Page address pins select the configuration image within an enhanced configuration device or flash memory (MAX II device or microprocessor setup). Page start address registers are used when Stratix II and Stratix II GX FPGAs are configured in AS mode with serial configuration devices. Figure 8–3 illustrates page mode operation in Stratix II and Stratix II GX FPGAs.

Figure 8–3. Page Mode Operation in Stratix II & Stratix II GX FPGAs

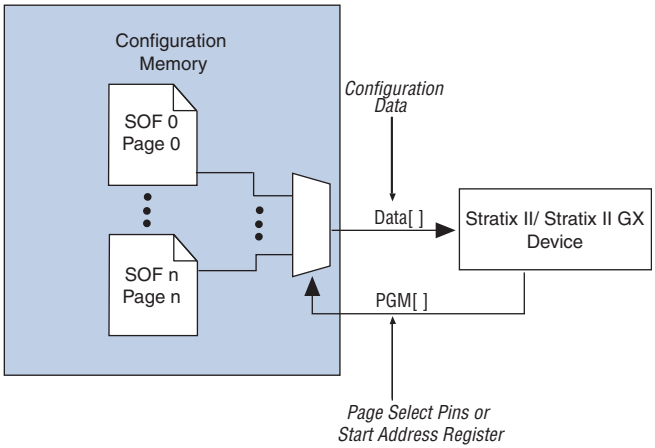

Stratix II and Stratix II GX devices drive out three page address pins, PGM[2..0], to the MAX II device or microprocessor or enhanced configuration device. These page pins select between eight configuration pages. Page zero (PGM[2..0] = 000) must contain the factory configuration, and the other seven pages are application configurations. The PGM[] pins are pointers to the start address and length of each page, and the MAX II device, microprocessor, and enhanced configuration devices perform this translation.

When implementing remote system upgrade with an intelligent-host-based configuration, your MAX II device or microprocessor should emulate the page mode feature supported by the enhanced configuration device, which translates PGM pointers to a memory address in the configuration memory. Your MAX II device or microprocessor must provide a similar translation feature.

For more information about the enhanced configuration device page mode feature, refer to the Dynamic Configuration (Page Mode) Implementation section of the *Enhanced Configuration Devices (EPC4, EPC8 & EPC16) Data Sheet* chapter in volume 2 of the *Configuration Handbook*.

When implementing remote system upgrade with AS configuration, a dedicated 7-bit page start address register inside Stratix II and Stratix II GX FPGAs determines the start addresses for configuration pages within the serial configuration device. The PGM[6..0] registers form bits [22..16] of the 24-bit start address while the other 17 bits are

set to zero: StAdd[23..0] = {1'b0, PGM[6..0], 16'b0}. During AS configuration, Stratix II and Stratix II GX FPGAs use this 24-bit page start address to obtain configuration data from the serial configuration devices.

Remote System Upgrade Modes

Remote system upgrade has two modes of operation: remote update mode and local update mode. The remote and local update modes allow you to determine the functionality of your system upon power up and offer different features. The RUnLU input pin selects between the remote update (logic high) and local update (logic low) modes.

Overview

In remote update mode, Stratix II and Stratix II GX FPGAs load the factory configuration image upon power up. The user-defined factory configuration should determine which application configuration is to be loaded and trigger a reconfiguration cycle. Remote update mode allows up to eight configuration images (one factory plus seven application images) when used with the MAX II device or microprocessor and flash-based configuration or an enhanced configuration device.

When used with serial configuration devices, the remote update mode allows an application configuration to start at any flash sector boundary. This translates to a maximum of 128 pages in the EPCS64 and 32 pages in the EPCS16 device, where the minimum size of each page is 512 KBits. Additionally, the remote update mode features a user watchdog timer that can detect functional errors in an application configuration.

Local update mode is a simplified version of the remote update mode. In this mode, Stratix II and Stratix II GX FPGAs directly load the application configuration, bypassing the factory configuration. This mode is useful if your system is required to boot into user mode with minimal startup time. It is also useful during system prototyping, as it allows you to verify functionality of the application configuration.

In local update mode, a maximum of two configuration images or pages is supported: one factory configuration, located at page address PGM[2..0] = 000, and one application configuration, located at page address PGM[2..0] = 001. Because the page address of the application configuration is fixed, the local update mode does not require the factory configuration image to determine which application is to be loaded. If any errors are encountered while loading the application configuration, Stratix II and Stratix II GX FPGAs revert to the factory configuration. The user watchdog timer feature is not supported in this mode.



Also, local update mode does not support AS configuration with the serial configuration devices because these devices don't support a dynamic pointer to page 001 start address location.

Table 8–2 details the differences between remote and local update modes.

Table 8–2. Differences Between Remote and Local Update Modes

Features	Remote Update Mode	Local Update Mode
RUnLU input pin setting	1	0
Page selection upon power up	PGM[2..0] = 000 (Factory)	PGM[2..0] = 001 (Application)
Supported configurations	MAX II device or microprocessor-based configuration, serial configuration, and enhanced configuration devices (FPP, PS, AS, PPA)	MAX II device or microprocessor-based configuration and enhanced configuration devices (FPP, PS, PPA)
Number of pages supported	Eight pages for external host or controller based configuration; up to 128 pages (512 KBits/page) for serial configuration device	Two pages
User watchdog timer	Available	Disabled
Remote system upgrade control and status register	Read/write access allowed in factory configuration. Read access in application configuration	Only status register read access allowed in local update mode (factory and application configurations). Write access to control register is disabled

Remote Update Mode

When Stratix II and Stratix II GX FPGAs are first powered up in remote update mode, it loads the factory configuration located at page zero (page address pins PGM[2..0] = "000"; page registers PGM[6..0] = "0000000"). You should always store the factory configuration image for your system at page address zero. A factory configuration image is a bitstream for the FPGA(s) in your system that is programmed during production and is the fall-back image when errors occur. This image is stored in non-volatile memory and is never updated or modified using

remote access. This corresponds to PGM[2..0] = 000 of the enhanced configuration device or standard flash memory, and start address location 0x000000 in the serial configuration device.

The factory image is user designed and contains soft logic to:

- Process any errors based on status information from the dedicated remote system upgrade circuitry
- Communicate with the remote host and receive new application configurations, and store this new configuration data in the local non-volatile memory device
- Determine which application configuration is to be loaded into the FPGA
- Enable or disable the user watchdog timer and load its time-out value (optional)
- Instruct the dedicated remote system upgrade circuitry to initiate a reconfiguration cycle

Figure 8–4 shows the transitions between the factory and application configurations in remote update mode.

Figure 8–4. Transitions Between Configurations in Remote Update Mode

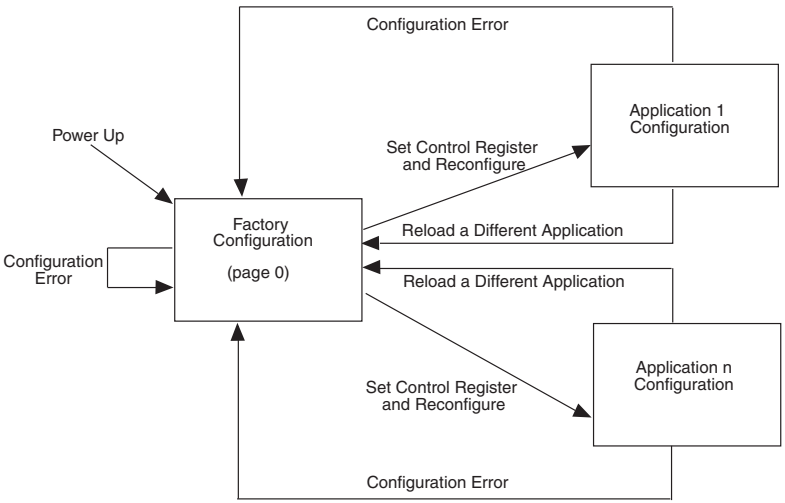

After power up or a configuration error, the factory configuration logic should write the remote system upgrade control register to specify the page address of the application configuration to be loaded. The factory configuration should also specify whether or not to enable the user watchdog timer for the application configuration and, if enabled, specify the timer setting.

The user watchdog timer ensures that the application configuration is valid and functional. After confirming the system is healthy, the user-designed application configuration should reset the timer periodically during user-mode operation of an application configuration. This timer reset logic should be a user-designed hardware and/or software health monitoring signal that indicates error-free system operation. If the user application configuration detects a functional problem or if the system hangs, the timer is not reset in time and the dedicated circuitry updates the remote system upgrade status register, triggering the device to load the factory configuration. The user watchdog timer is automatically disabled for factory configurations.



Only valid application configurations designed for remote update mode include the logic to reset the timer in user mode.



For more information about the user watchdog timer, see "User Watchdog Timer" on page 8–20.

If there is an error while loading the application configuration, the remote system upgrade status register is written by the Stratix II or Stratix II GX FPGA's dedicated remote system upgrade circuitry, specifying the cause of the reconfiguration. Actions that cause the remote system upgrade status register to be written are:

- nSTATUS driven low externally
- Internal CRC error
- User watchdog timer time out
- A configuration reset (logic array nCONFIG signal or external nCONFIG pin assertion)

Stratix II and Stratix II GX FPGAs automatically load the factory configuration located at page address zero. This user-designed factory configuration should read the remote system upgrade status register to determine the reason for reconfiguration. The factory configuration should then take appropriate error recovery steps and write to the remote system upgrade control register to determine the next application configuration to be loaded.

When Stratix II or Stratix II GX devices successfully load the application configuration, they enter into user mode. In user mode, the soft logic (Nios processor or state machine and the remote communication interface) assists the Stratix II or Stratix II GX device in determining when a remote system update is arriving. When a remote system update arrives, the soft logic receives the incoming data, writes it to the configuration memory device, and triggers the device to load the factory configuration. The factory configuration reads the remote system upgrade status register, determines the valid application configuration to load, writes the remote system upgrade control register accordingly, and initiates system reconfiguration.

Stratix II and Stratix II GX FPGAs support the remote update mode in the AS, FPP, PS, and PPA configuration schemes. In the FPP, PS, and PPA schemes, the MAX II device, microprocessor, or enhanced configuration device should sample the PGM[2..0] outputs from the Stratix II or Stratix II GX FPGA and transmit the appropriate configuration image. In the AS scheme, the Stratix II or Stratix II GX device uses the page addresses to read configuration data out of the serial configuration device.

Local Update Mode

Local update mode is a simplified version of the remote update mode. This feature allows systems to load an application configuration immediately upon power up without loading the factory configuration first. Local update mode does not require the factory configuration to determine which application configuration to load, because only one application configuration is allowed (at page address one (PGM [2..0] = 001). You can update this application configuration remotely. If an error occurs while loading the application configuration, the factory configuration is automatically loaded.

Upon power up or nCONFIG assertion, the dedicated remote system upgrade circuitry drives out "001" on the PGM[] pins selecting the application configuration stored in page one. If the device encounters any errors during the configuration cycle, the remote system upgrade circuitry retries configuration by driving PGM[2..0] to zero (PGM[2..0] = 000) to select the factory configuration image. The error conditions that trigger a return to the factory configuration are:

- An internal CRC error
- An external error signal (nSTATUS detected low)

When the remote system upgrade circuitry detects an external configuration reset (nCONFIG pulsed low) or internal configuration reset (logic array nCONFIG assertion), the device attempts to reload the application configuration from page one.

Figure 8–5 shows the transitions between configurations in local update mode.

Figure 8–5. Transitions Between Configurations in Local Update Mode

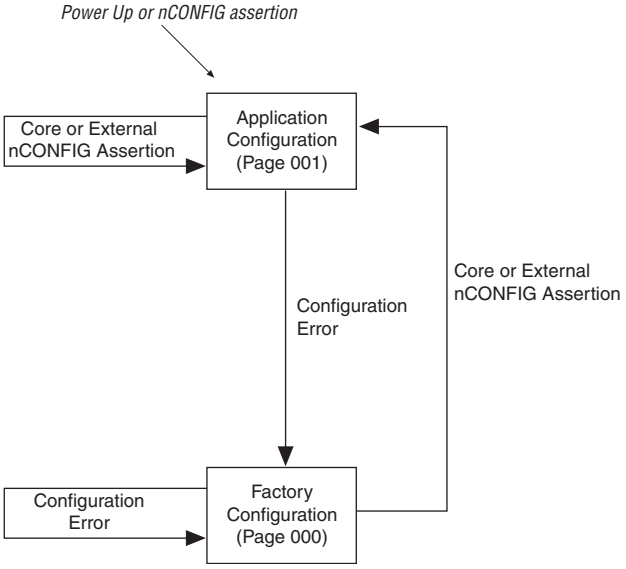

Stratix II and Stratix II GX FPGAs support local update mode in the FPP, PS, and PPA configuration schemes. In these schemes, the MAX II device, microprocessor, or enhanced configuration device should sample the PGM[2..0] outputs from the Stratix II or Stratix II GX FPGA and transmit the appropriate configuration image.

Local update mode is not supported with the AS configuration scheme, (or serial configuration device), because the Stratix II or Stratix II GX FPGA cannot determine the start address of the application configuration page upon power up. While the factory configuration is always located at memory address 0x000000, the application configuration can be located at any other sector boundary within the serial configuration device. The start address depends on the size of the factory configuration and is user selectable. Hence, only remote update mode is supported in the AS configuration scheme.

☞ Local update mode is not supported in the AS configuration scheme (with a serial configuration device).

Local update mode supports read access to the remote system upgrade status register. The factory configuration image can use this error status information to determine if a new application configuration must be downloaded from the remote source. After a remote update, the user design should assert the logic array configuration reset (nCONFIG) signal to load the new application configuration.

The device does not support write access to the remote system upgrade control register in local update mode. Write access is not required because this mode only supports one application configuration (eliminating the need to write in a page address) and does not support the user watchdog timer (eliminating the need to enable or disable the timer or specify its time-out value).

☞ The user watchdog timer is disabled in local update mode.

☞ Write access to the remote system upgrade control register is disabled in local update mode. However, the device supports read access to obtain error status information.

Dedicated Remote System Upgrade Circuitry

This section explains the implementation of the Stratix II or Stratix II GX remote system upgrade dedicated circuitry. The remote system upgrade circuitry is implemented in hard logic. This dedicated circuitry interfaces to the user-defined factory application configurations implemented in the FPGA logic array to provide the complete remote configuration solution. The remote system upgrade circuitry contains the remote system upgrade registers, a watchdog timer, and a state machine that controls those components. Figure 8–6 shows the remote system upgrade block's data path.

Figure 8–6. Remote System Upgrade Circuit Data Path

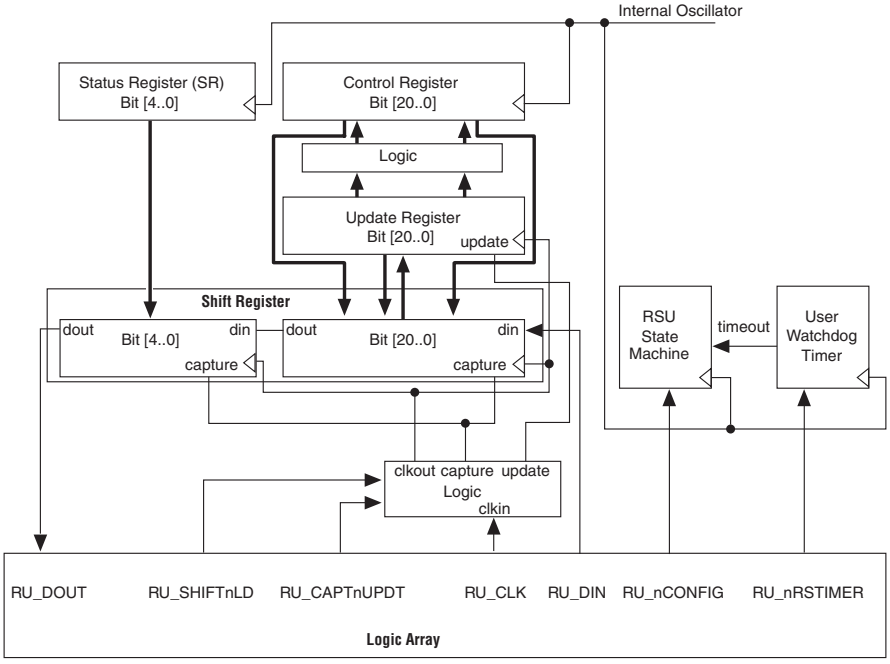

Remote System Upgrade Registers

The remote system upgrade block contains a series of registers that store the page addresses, watchdog timer settings, and status information. These registers are detailed in Table 8–3.

Table 8–3. Remote System Upgrade Registers (Part 1 of 2)

Register	Description
Shift register	This register is accessible by the logic array and allows the update, status, and control registers to be written and sampled by user logic. Write access is enabled in remote update mode for factory configurations to allow writes to the update register. Write access is disabled in local update mode and for all application configurations in remote update mode.
Control register	This register contains the current page address, the user watchdog timer settings, and one bit specifying whether the current configuration is a factory configuration or an application configuration. During a read operation in an application configuration, this register is read into the shift register. When a reconfiguration cycle is initiated, the contents of the update register are written into the control register.

Table 8–3. Remote System Upgrade Registers (Part 2 of 2)

Register	Description
Update register	This register contains data similar to that in the control register. However, it can only be updated by the factory configuration by shifting data into the shift register and issuing an update operation. When a reconfiguration cycle is triggered by the factory configuration, the control register is updated with the contents of the update register. During a read in a factory configuration, this register is read into the shift register.
Status register	This register is written to by the remote system upgrade circuitry on every reconfiguration to record the cause of the reconfiguration. This information is used by the factory configuration to determine the appropriate action following a reconfiguration. During a capture cycle, this register is read into the shift register.

The remote system upgrade control and status registers are clocked by the 10-MHz internal oscillator (the same oscillator that controls the user watchdog timer). However, the remote system upgrade shift and update registers are clocked by the user clock input (RU_CLK).

Remote System Upgrade Control Register

The remote system upgrade control register stores the application configuration page address and user watchdog timer settings. The control register functionality depends on the remote system upgrade mode selection. In remote update mode, the control register page address bits are set to all zeros (7'b0 = 0000_000) at power up in order to load the factory configuration. However, in local update mode the control register page address bits power up as (7'b1 = 0000_001) in order to select the application configuration. Additionally, the control register cannot be updated in local update mode, whereas a factory configuration in remote update mode has write access to this register.

The control register bit positions are shown in Figure 8–7 and defined in Table 8–4. In the figure, the numbers show the bit position of a setting within a register. For example, bit number 8 is the enable bit for the watchdog timer.

Figure 8–7. Remote System Upgrade Control Register

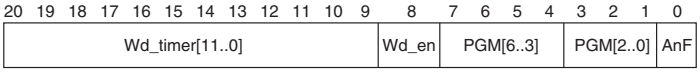

The application-not-factory (AnF) bit indicates whether the current configuration loaded in the Stratix II or Stratix II GX device is the factory configuration or an application configuration. This bit is set high at power up in local update mode, and is set low by the remote system upgrade circuitry when an error condition causes a fall-back to factory configuration. When the AnF bit is high, the control register access is limited to read operations. When the AnF bit is low, the register allows write operations and disables the watchdog timer.



In remote update mode, factory configuration design should set this bit high (1'b1) when updating the contents of the update register with application page address and watchdog timer settings.

Table 8–4. Remote System Upgrade Control Register Contents

Control Register Bit	Remote System Upgrade Mode	Value	Definition
AnF *(1)*	Local update Remote update	1'b1 1'b0	Application not factory
PGM[2..0]	Local update Remote update (FPP, PS, PPA)	3'b001 3'b000	Page mode select
	Remote update (AS)	3'b000	AS configuration start address (StAdd[18..16])
PGM[6..3]	Local update Remote update (FPP, PS, PPA)	4'b0000 4'b0000	Not used
	Remote update (AS)	4'b0000	AS configuration start address (StAdd[22..19])
Wd_en	Remote update	1'b0	User watchdog timer enable bit
Wd_timer[11..0]	Remote update	12'b000000000000	User watchdog time-out value (most significant 12 bits of 29-bit count value: {Wd_timer[11..0], 17'b0})

Note to Table 8–4:

(1) In remote update mode, the remote configuration block does not update the AnF bit automatically (you can update it manually). In local update mode, the remote configuration updates the AnF bit with 0 in the factory page and 1 in the application page.

Remote System Upgrade Status Register

The remote system upgrade status register specifies the reconfiguration trigger condition. The various trigger and error conditions include:

- CRC (cyclic redundancy check) error during application configuration
- nSTATUS assertion by an external device due to an error
- FPGA logic array triggered a reconfiguration cycle, possibly after downloading a new application configuration image
- External configuration reset (nCONFIG) assertion
- User watchdog timer time out

Figure 8–8 and Table 8–5 specify the contents of the status register. The numbers in the figure show the bit positions within a 5-bit register.

Figure 8–8. Remote System Upgrade Status Register

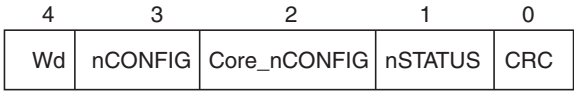

Table 8–5. Remote System Upgrade Status Register Contents

Status Register Bit	Definition	POR Reset Value
CRC (from configuration)	CRC error caused reconfiguration	1 bit '0'
nSTATUS	nSTATUS caused reconfiguration	1 bit '0'
CORE *(1)* CORE_nCONFIG	Device logic array caused reconfiguration	1 bit '0'
nCONFIG	nCONFIG caused reconfiguration	1 bit '0'
Wd	Watchdog timer caused reconfiguration	1 bit '0'

Note to Table 8–5:

(1) Logic array reconfiguration forces the system to load the application configuration data into the Stratix II or Stratix II GX device. This occurs after the factory configuration specifies the appropriate application configuration page address by updating the update register.

Remote System Upgrade State Machine

The remote system upgrade control and update registers have identical bit definitions, but serve different roles (see Table 8–3 on page 8–15). While both registers can only be updated when the FPGA is loaded with a factory configuration image, the update register writes are controlled by the user logic, and the control register writes are controlled by the remote system upgrade state machine.

In factory configurations, the user logic should send the AnF bit (set high), the page address, and watchdog timer settings for the next application configuration bit to the update register. When the logic array configuration reset (RU_nCONFIG) goes high, the remote system upgrade state machine updates the control register with the contents of the update register and initiates system reconfiguration from the new application page.

In the event of an error or reconfiguration trigger condition, the remote system upgrade state machine directs the system to load a factory or application configuration (page zero or page one, based on mode and error condition) by setting the control register accordingly. Table 8–6 lists the contents of the control register after such an event occurs for all possible error or trigger conditions.

The remote system upgrade status register is updated by the dedicated error monitoring circuitry after an error condition but before the factory configuration is loaded.

Table 8–6. Control Register Contents After an Error or Reconfiguration Trigger Condition

Reconfiguration Error/Trigger	Control Register Setting	
	Remote Update	Local Update
nCONFIG reset	All bits are 0	PGM[6..0] = 7'b0000001 AnF = 1 All other bits are 0
nSTATUS error	All bits are 0	All bits are 0
CORE triggered reconfiguration	Update register	PGM[6..0] = 7'b0000001 AnF = 1 All other bits are 0
CRC error	All bits are 0	All bits are 0
Wd time out	All bits are 0	All bits are 0

Read operations during factory configuration access the contents of the update register. This feature is used by the user logic to verify that the page address and watchdog timer settings were written correctly. Read operations in application configurations access the contents of the control register. This information is used by the user logic in the application configuration.

User Watchdog Timer

The user watchdog timer prevents a faulty application configuration from stalling the device indefinitely. The system uses the timer to detect functional errors after an application configuration is successfully loaded into the FPGA.

The user watchdog timer is a counter that counts down from the initial value loaded into the remote system upgrade control register by the factory configuration. The counter is 29-bits-wide and has a maximum count value of 2^{29}. When specifying the user watchdog timer value, specify only the most significant 12 bits. The granularity of the timer setting is 2^{15} cycles. The cycle time is based on the frequency of the 10-MHz internal oscillator. Table 8–7 specifies the operating range of the 10-MHz internal oscillator.

Table 8–7. 10-MHz Internal Oscillator Specifications

Minimum	Typical	Maximum	Units
5	6.5	10	MHz

The user watchdog timer begins counting once the application configuration enters FPGA user mode. This timer must be periodically reloaded or reset by the application configuration before the timer expires by asserting `RU_nRSTIMER`. If the application configuration does not reload the user watchdog timer before the count expires, a time-out signal is generated by the remote system upgrade dedicated circuitry. The time-out signal tells the remote system upgrade circuitry to set the user watchdog timer status bit (`Wd`) in the remote system upgrade status register and reconfigures the device by loading the factory configuration.

The user watchdog timer is not enabled during the configuration cycle of the FPGA. Errors during configuration are detected by the CRC engine. Also, the timer is disabled for factory configurations. Functional errors should not exist in the factory configuration since it is stored and validated during production and is never updated remotely.



The user watchdog timer is disabled in factory configurations and during the configuration cycle of the application configuration. It is enabled after the application configuration enters user mode.

Interface Signals between Remote System Upgrade Circuitry and FPGA Logic Array

The dedicated remote system upgrade circuitry drives (or receives) seven signals to (or from) the FPGA logic array. The FPGA logic array uses these signals to read and write the remote system upgrade control, status, and update registers using the remote system upgrade shift register. Table 8–8 lists each of these seven signals and describes their functionality.

Except for RU_nRSTIMER and RU_CAPTnUPDT, the logic array signals are enabled for both remote and local update modes and for both factory and application configurations. RU_nRSTIMER is only valid for application configurations in remote update mode, since local update configurations and factory configurations have the user watchdog timer disabled. When RU_CAPTnUPDT is low, the device can write to the update register only for factory configurations in remote update mode, since this is the only case where the update register is written to by the user logic. When the RU_nCONFIG signal goes high, the contents of the update register are written into the control register for controlling the next configuration cycle.

Table 8–8. Interface Signals between Remote System Upgrade Circuitry and FPGA Logic Array (Part 1 of 3)

Signal Name	Signal Direction	Description
RU_nRSTIMER	Input to remote system upgrade block (driven by FPGA logic array)	Request from the application configuration to reset the user watchdog timer with its initial count. A falling edge of this signal triggers a reset of the user watchdog timer.
RU_nCONFIG	Input to remote system upgrade block (driven by FPGA logic array)	When driven low, this signal triggers the device to reconfigure. If asserted by the factory configuration in remote update mode, the application configuration specified in the remote update control register is loaded. If requested by the application configuration in remote update mode, the factory configuration is loaded. In the local updated mode, the application configuration is loaded whenever this signal is asserted.

Table 8–8. Interface Signals between Remote System Upgrade Circuitry and FPGA Logic Array (Part 2 of 3)

Signal Name	Signal Direction	Description
RU_CLK	Input to remote system upgrade block (driven by FPGA logic array)	Clocks the remote system upgrade shift register and update register so that the contents of the status, control, and update registers can be read, and so that the contents of the update register can be loaded. The shift register latches data on the rising edge of this clock signal.
RU_SHIFTnLD	Input to remote system upgrade block (driven by FPGA logic array)	This pin determines if the shift register contents are shifted over during the next clock edge or loaded in/out. When this signal is driven high (1'b1), the remote system upgrade shift register shifts data left on each rising edge of RU_CLK. When RU_SHIFTnLD is driven low (1'b0) and RU_CAPTnUPDT is driven low (1'b0), the remote system upgrade update register is updated with the contents of the shift register on the rising edge of RU_CLK. When RU_SHIFTnLD is driven low (1'b0) and RU_CAPTnUPDT is driven high (1'b1), the remote system upgrade shift register captures the status register and either the control or update register (depending on whether the current configuration is application or factory, respectively) on the rising edge of RU_CLK.
RU_CAPTnUPDT	Input to remote system upgrade block (driven by FPGA logic array)	This pin determines if the contents of the shift register are captured or updated on the next clock edge. When the RU_SHIFTnLD signal is driven high (1'b1), this input signal has no function. When RU_SHIFTnLD is driven low (1'b0) and RU_CAPTnUPDT is driven high (1'b1), the remote system upgrade shift register captures the status register and either the control or update register (depending on whether the current configuration is application or factory, respectively) on the rising edge of RU_CLK. When RU_SHIFTnLD is driven low (1'b0) and RU_CAPTnUPDT is driven low (1'b0), the remote system upgrade update register is updated with the contents of the shift register on the rising edge of RU_CLK. In local update mode, a low input on RU_CAPTnUPDT has no function, because the update register cannot be updated in this mode.

Table 8–8. Interface Signals between Remote System Upgrade Circuitry and FPGA Logic Array (Part 3 of 3)

Signal Name	Signal Direction	Description
RU_DIN	Input to remote system upgrade block (driven by FPGA logic array)	Data to be written to the remote system upgrade shift register on the rising edge of RU_CLK. To load data into the shift register, RU_SHIFTnLD must be asserted.
RU_DOUT	Output from remote system upgrade block (driven to FPGA logic array)	Output data from the remote system upgrade shift register to be read by logic array logic. New data arrives on each rising edge of RU_CLK.

Remote System Upgrade Pin Descriptions

Table 8–9 describes the dedicated remote system upgrade configuration pins.



For descriptions of all the configuration pins, refer to the *Configuring Stratix II & Stratix II GX Devices* chapter in volume 2 of the *Stratix II Handbook* and the *Configuring Stratix II & Stratix II GX Devices* chapter in volume 2 of the *Stratix II GX Handbook*.

Table 8–9. Stratix II and Stratix II GX Remote System Upgrade Pins

Pin Name	User Mode	Configuration Scheme	Pin Type	Description
RUnLU	N/A if using remote system upgrade in FPP, PS, AS, or PPA modes. I/O if not using these modes.	Remote configuration in FPP, PS, or PPA	Input	Input that selects between remote update and local update. A logic high (1.5-V, 1.8-V, 2.5-V, 3.3-V) selects remote update, and a logic low selects local update. When not using remote update or local update configuration modes, this pin is available as a general-purpose user I/O pin. When using remote configuration in AS mode, set the RUnLU pin to high because AS does not support local update.
PGM[2..0]	N/A if using remote system upgrade in FPP, PS, AS, or PPA modes. I/O if not using these modes.	Remote configuration in FPP, PS or PPA	Output	These output pins select one of eight pages in the memory (either flash or enhanced configuration device) when using remote update mode. When not using remote update or local update configuration modes, these pins are available as general-purpose user I/O pins.

Quartus II Software Support

Implementation in your design requires an remote system upgrade interface between the FPGA logic array and remote system upgrade circuitry. You also need to generate configuration files for production and remote programming of the system configuration memory. The Quartus® II software provides these features.

The two implementation options, `altremote_update` megafunction and remote system upgrade atom, are for the interface between the remote system upgrade circuitry and the FPGA logic array interface.

altremote_update Megafunction

The `altremote_update` megafunction provides a memory-like interface to the remote system upgrade circuitry and handles the shift register read/write protocol in FPGA logic. This implementation is suitable for designs that implement the factory configuration functions using a Nios processor in the FPGA.

Tables 8–10 and 8–11 describe the input and output ports available on the altremote_update megafunction. Table 8–12 shows the param[2..0] bit settings.

Table 8–10. Input Ports of the altremote_update Megafunction (Part 1 of 2)

Port Name	Required	Source	Description
clock	Y	Logic Array	Clock input to the altremote_update block. All operations are performed with respects to the rising edge of this clock.
reset	Y	Logic Array	Asynchronous reset, which is used to initialize the remote update block. To ensure proper operation, the remote update block must be reset before first accessing the remote update block. This signal is not affected by the busy signal and will reset the remote update block even if busy is logic high. This means that if the reset signal is driven logic high during writing of a parameter, the parameter will not be properly written to the remote update block.
reconfig	Y	Logic Array	When driven logic high, reconfiguration of the device is initiated using the current parameter settings in the remote update block. If busy is asserted, this signal is ignored. This is to ensure all parameters are completely written before reconfiguration begins.
reset_timer	N	Logic Array	This signal is required if you are using the watchdog timer feature. A logic high resets the internal watchdog timer. This signal is not affected by the busy signal and can reset the timer even when the remote update block is busy. If this port is left connected, the default value is 0.
read_param	N	Logic Array	Once read_param is sampled as a logic high, the busy signal is asserted. While the parameter is being read, the busy signal remains asserted, and inputs on param[] are ignored. Once the busy signal is deactivated, the next parameter can be read. If this port is left unconnected, the default value is 0.
write_param	N	Logic Array	This signal is required if you intend on writing parameters to the remote update block. When driven logic high, the parameter specified on the param[] port should be written to the remote update block with the value on data_in[]. The number of valid bits on data_in[] is dependent on the parameter type. This signal is sampled on the rising edge of clock and should only be asserted for one clock cycle to prevent the parameter from being re-read on subsequent clock cycles. Once write_param is sampled as a logic high, the busy signal is asserted. While the parameter is being written, the busy signal remains asserted, and inputs on param[] and data_in[] are ignored. Once the busy signal is deactivated, the next parameter can be written. This signal is only valid when the Current_Configuration parameter is factory since parameters cannot be written in application configurations. If this port is left unconnected, the default value is 0.

Table 8–10. Input Ports of the altremote_update Megafunction (Part 2 of 2)

Port Name	Required	Source	Description
param[2..0]	N	Logic Array	3-bit bus that selects which parameter should be read or written. If this port is left unconnected, the default value is 0.
data_in[11..0]	N	Logic Array	This signal is required if you intend on writing parameters to the remote update block 12-bit bus used when writing parameters, which specifies the parameter value. The parameter value is requested using the param[] input and by driving the write_param signal logic high, at which point the busy signal goes logic high and the value of the parameter is captured from this bus. For some parameters, not all 12 bits are used, in which case only the least significant bits are used. This port is ignored if the Current_Configuration parameter is set to an application configuration since writing of parameters is only allowed in the factory configuration. If this port is left unconnected, the default value is 0.

Note to Table 8–10:
(1) Logic array source means that you can drive the port from internal logic or any general-purpose I/O pin.

Table 8–11. Output Ports of the altremote_update Megafunction (Part 1 of 2)

Port Name	Required	Destination	Description
busy	Y	Logic Array	When this signal is a logic high, the remote update block is busy either reading or writing a parameter. When the remote update block is busy, it ignores its data_in[], param[], and reconfig inputs. This signal goes high when read_param or write_param is asserted and remains asserted until the operation is complete.
pgm_out[2..0]	Y	PGM[2..0] pins	3-bit bus that specifies the page pointer of the configuration data to be loaded when the device is reconfigured. This port must be connected to the PGM[] output pins, which should be connected to the external configuration device.

Table 8–11. Output Ports of the altremote_update Megafunction (Part 2 of 2)

Port Name	Required	Destination	Description
data_out[11..0]	N	Logic Array	12-bit bus used when reading parameters, which reads out the parameter value. The parameter value is requested using the param[] input and by driving the read_param signal logic high, at which point the busy signal goes logic high. When the busy signal goes low, the value of the parameter is driven out on this bus. The data_out[] port is only valid after a read_param has been issued and once the busy signal is deasserted. At any other time, its output values are invalid. For example, even though the data_out[] port may toggle during a writing of a parameter, these values are not a valid representation of what was actually written to the remote update block. For some parameters, not all 12 bits are used, in which case only the least significant bits are used.

Note to Table 8–11:
(1) Logic array destination means that you can drive the port to internal logic or any general-purpose I/O pin.

Table 8–12. Parameter Settings for the altremote_update Megafunction (Part 1 of 2)

Selected Parameter	param[2..0] Bit Setting	Width of Parameter Value	POR Reset Value	Description
Status Register Contents	000	5	5 bit '0	Specifies the reason for re-configuration, which could be caused by a CRC error during configuration, nSTATUS being pulled low due to an error, the device core caused an error, nCONFIG pulled low, or the watchdog timer timed-out. This parameter can only be read.
Watchdog Timeout Value	010	12	12 bits '0	User watchdog timer time-out value. Writing of this parameter is only allowed when in the factory configuration.
Watchdog Enable	011	1	1 bit '0	User watchdog timer enable. Writing of this parameter is only allowed when in the factory configuration
Page select	100	3 (FPP, PS, PPA)	3 bit '001' - Local configuration	Page mode selection. Writing of this parameter is only allowed when in the factory configuration.
			3 bit '000' - Remote configuration	
		7 (AS)	7 bit '0000000' - Remote configuration	

Table 8–12. Parameter Settings for the altremote_update Megafunction (Part 2 of 2)

Selected Parameter	param[2..0] Bit Setting	Width of Parameter Value	POR Reset Value	Description
Current configuration (AnF)	101	1	1 bit '0' - Factory 1 bit '1' - Application	Specifies whether the current configuration is factory or and application configuration. This parameter can only be read.
Illegal values	001			
	110			
	111			

Remote System Upgrade Atom

The remote system upgrade atom is a WYSIWYG atom or primitive that can be instantiated in your design. The primitive is used to access the remote system upgrade shift register, logic array reset, and watchdog timer reset signals. The ports on this primitive are the same as those listed in Table 8–8. This implementation is suitable for designs that implement the factory configuration functions using state machines (without a processor).

System Design Guidelines

The following general guidelines are applicable when implementing remote system upgrade in Stratix II and Stratix II GX FPGAs. Guidelines for specific configuration schemes are also discussed in this section.

- After downloading a new application configuration, the soft logic implemented in the FPGA can validate the integrity of the data received over the remote communication interface. This optional step helps avoid configuration attempts with bad or incomplete configuration data. However, in the event that bad or incomplete configuration data is sent to the FPGA, it detects the data corruption using the CRC signature attached to each configuration frame.
- The auto-reconfigure on configuration error option bit is ignored when remote system upgrade is enabled in your system. This option is always enabled in remote configuration designs, allowing your system to return to the safe factory configuration in the event of an application configuration error or user watchdog timer time out.

Remote System Upgrade With Serial Configuration Devices

Remote system upgrade support in the AS configuration scheme is similar to support in other schemes, with the following exceptions:

- The remote system upgrade block provides the AS configuration controller inside the Stratix II or Stratix II GX FPGA with a 7-bit page start address (PGM[6..0]) instead of driving the 3-bit page mode pins (PGM[2..0]) used in FPP, PS, and PPA configuration schemes. This 7-bit address forms the 24-bit configuration start address (StAdd[23..0]). Table 8–13 illustrates the start address generation using the page address registers.
- The configuration start address for factory configuration is always set to 24'b0.
- PGM[2..0] pins on Stratix II devices are not used in AS configuration schemes and can not be used as regular I/O pins.
- The Nios ASMI peripheral can be used to update configuration data within the serial configuration device.

Table 8–13. AS Configuration Start Address Generation

Serial Configuration Device	Serial Configuration Device Density (MB)	Add[23]	PGM[6..0] (Add[22..16])	Add[15..0]
EPCS64	64	0	MSB[6..0]	All 0s
EPCS16	16	0	00, MSB[4..0]	All 0s
EPCS4	4	0	0000, MSB[2..0]	All 0s

Remote System Upgrade With a MAX II Device or Microprocessor and Flash Device

This setup requires the MAX II device or microprocessor to support page addressing. MAX II or microprocessor devices implementing remote system upgrade should emulate the enhanced configuration device page mode feature. The PGM[2..0] output pins from the Stratix II or Stratix II GX device must be sampled to determine which configuration image is to be loaded into the FPGA.

If the FPGA does not release CONF_DONE after all data has been sent, the MAX II microprocessor should reset the FPGA back to the factory image by pulsing its nSTATUS pin low.

The MAX II device or microprocessor and flash configuration can use FPP, PS, or PPA. Decompression and design security features are supported in the FPP (requires 4× DCLK) and PS modes only. Figure 8–9 shows a system block diagram for remote system upgrade with the MAX II device or microprocessor and flash.

Figure 8–9. System Block Diagram for Remote System Upgrade With MAX II Device or Microprocessor and Flash Device

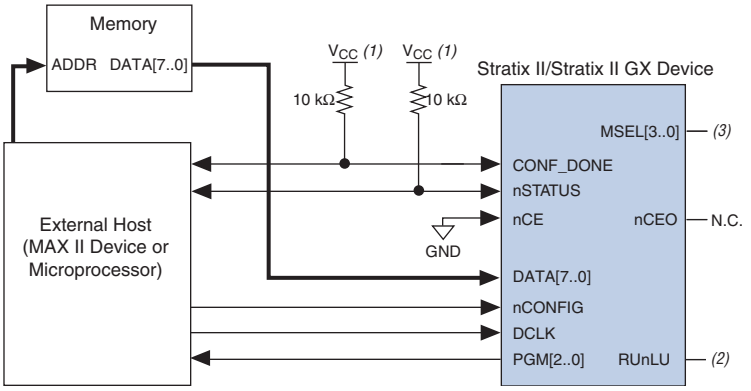

Notes to Figure 8–9:

(1) Connect the pull-up resistor to a supply that provides an acceptable input signal for the device.

(2) Connect `RUnLU` to GND or V_{CC} to select between remote and local update modes.

(3) Connect `MSEL[3..0]` to `0100` to enable remote update remote system upgrade mode.

Remote System Upgrade with Enhanced Configuration Devices

- Enhanced Configuration devices support remote system upgrade with FPP or PS configuration schemes. The Stratix II or Stratix II GX decompression and design security features are only supported in the PS mode. The enhanced configuration device's decompression feature is supported in both PS and FPP schemes.
- In remote update mode, neither the factory configuration nor the application configurations should alter the enhanced configuration device's option bits or the page 000 factory configuration data. This ensures that an error during remote update can always be resolved by reverting to the factory configuration located at page 000.

- The enhanced configuration device features an error checking mechanism to detect instances when the FPGA fails to detect the configuration preamble. In these instances, the enhanced configuration device pulses the nSTATUS signal low, and the remote system upgrade circuitry attempts to load the factory configuration. Figure 8–10 shows a system block diagram for remote system upgrade with enhanced configuration devices.

Figure 8–10. System Block Diagram for Remote System Upgrade with Enhanced Configuration Devices

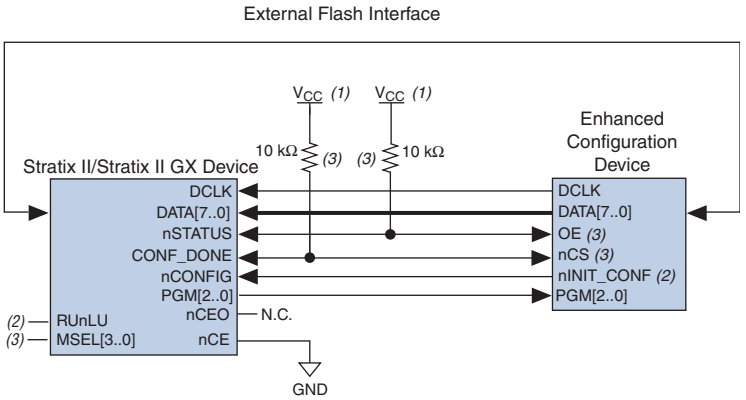

Notes to Figure 8–10:

(1) Connect the pull-up resistor to a supply that provides an acceptable input signal for the device.

(2) Connect RUnLU to GND or V_{CC} to select between remote and local update modes.

(3) Connect MSEL[3..0] to 0100 to enable remote update remote system upgrade mode.

Conclusion

Stratix II and Stratix II GX devices offer remote system upgrade capability, where you can upgrade a system in real-time through any network. Remote system upgrade helps to deliver feature enhancements and bug fixes without costly recalls, reduces time to market, and extends product life cycles. The dedicated remote system upgrade circuitry in Stratix II and Stratix II GX devices provides error detection, recovery, and status information to ensure reliable reconfiguration.

Referenced Documents

This chapter references the following documents:

- *Configuring Stratix II & Stratix II GX Devices* chapter in volume 2 of the *Stratix II Handbook*

- *Configuring Stratix II & Stratix II GX Devices* chapter in volume 2 of the *Stratix II GX Handbook*
- *Enhanced Configuration Devices (EPC4, EPC8 & EPC16) Data Sheet* chapter in volume 2 of the *Configuration Handbook*
- *Serial Configuration Devices (EPCS1, EPCS4, EPCS16, EPCS64, and EPCS128) Data Sheet* in volume 2 of the *Configuration Handbook*

Document Revision History

Table 8–14 shows the revision history for this chapter.

Table 8–14. Document Revision History

Date and Document Version	Changes Made	Summary of Changes
January 2008, v4.5	Updated `PGM[2..0]` information in Table 8–9.	—
	Updated Table 8–7.	
	Added the "Referenced Documents" section.	—
	Minor text edits.	—
No change	For the *Stratix II GX Device Handbook* only: Formerly chapter 13. The chapter number changed due to the addition of the *Stratix II GX Dynamic Reconfiguration* chapter. No content change.	—
May 2007, v4.4	Updated note to "Functional Description" section.	—
	Minor text edit to "Remote System Upgrade With Serial Configuration Devices" section.	—
February 2007 v4.3	Added the "Document Revision History" section to this chapter.	—
April 2006, v4.2	Chapter updated as part of the *Stratix II Device Handbook* update.	—
No change	Formerly chapter 12. Chapter number change only due to chapter addition to Section I in February 2006; no content change.	—
December 2005, v4.1	Chapter updated as part of the *Stratix II Device Handbook* update.	—
October 2005 v4.0	Added chapter to the *Stratix II GX Device Handbook*.	—

9. IEEE 1149.1 (JTAG) Boundary-Scan Testing for Stratix II and Stratix II GX Devices

SII52009-3.3

Introduction

As printed circuit boards (PCBs) become more complex, the need for thorough testing becomes increasingly important. Advances in surface-mount packaging and PCB manufacturing have resulted in smaller boards, making traditional test methods (such as; external test probes and "bed-of-nails" test fixture) harder to implement. As a result, cost savings from PCB space reductions increases the cost for traditional testing methods.

In the 1980s, the Joint Test Action Group (JTAG) developed a specification for boundary-scan testing that was later standardized as the IEEE Std. 1149.1 specification. This Boundary-Scan Test (BST) architecture offers the capability to test efficiently components on PCBs with tight lead spacing.

This BST architecture tests pin connections without using physical test probes and captures functional data while a device is operating normally. Boundary-scan cells in a device can force signals onto pins or capture data from pin or logic array signals. Forced test data is serially shifted into the boundary-scan cells. Captured data is serially shifted out and externally compared to expected results. Figure 9–1 illustrates the concept of BST.

Figure 9–1. IEEE Std. 1149.1 Boundary-Scan Testing

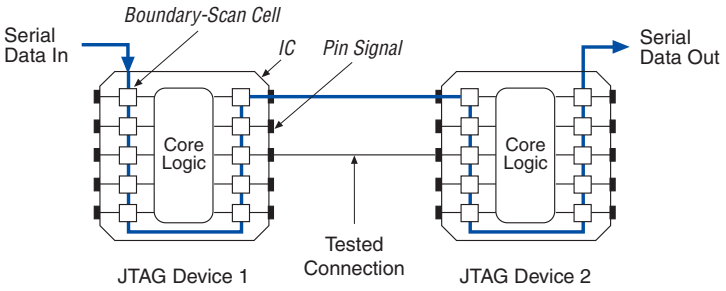

This chapter discusses how to use the IEEE Std. 1149.1 BST circuitry in Stratix® II and Stratix GX devices, including:

- IEEE Std. 1149.1 BST architecture
- IEEE Std. 1149.1 boundary-scan register
- IEEE Std. 1149.1 BST operation control
- I/O Voltage Support in JTAG Chain
- IEEE Std. 1149.1 BST circuitry utilization
- IEEE Std. 1149.1 BST circuitry disabling
- IEEE Std. 1149.1 BST guidelines
- Boundary-Scan Description Language (BSDL) support

In addition to BST, you can use the IEEE Std. 1149.1 controller for Stratix II and Stratix II GX device in-circuit reconfiguration (ICR). However, this chapter only discusses the BST feature of the IEEE Std. 1149.1 circuitry.

For information on configuring Stratix II devices via the IEEE Std. 1149.1 circuitry, refer to the *Configuring Stratix II & Stratix II GX Devices* chapter in volume 2 of the *Stratix II Device Handbook*, or the *Configuring Stratix II & Stratix II GX Devices* chapter in volume 2 of the *Stratix II GX Device Handbook*.

When configuring via IJAG make sure that Stratix II, Stratix II GX, Stratix, Cyclone™ II, and Cyclone devices are within the first 17 devices in a JTAG chain. All of these devices have the same JTAG controller. If any of the Stratix II, Stratix II GX, Stratix, Cyclone II, and Cyclone devices are in the 18th or further position, configuration fails. This does not affect SignalTap® II or boundary-scan testing.

IEEE Std. 1149.1 BST Architecture

A Stratix II and Stratix II GX device operating in IEEE Std. 1149.1 BST mode uses four required pins, `TDI`, `TDO`, `TMS` and `TCK`, and one optional pin, `TRST`. The `TCK` pin has an internal weak pull-down resistor, while the `TDI`, `TMS` and `TRST` pins have weak internal pull-ups. The `TDO` output pin is powered by V_{CCIO} in I/O bank 4. All of the JTAG input pins are powered by the 3.3-V V_{CCPD} supply. All user I/O pins are tri-stated during JTAG configuration.

For recommendations on how to connect a JTAG chain with multiple voltages across the devices in the chain, refer to "I/O Voltage Support in JTAG Chain" on page 9–17.

Table 9–1 summarizes the functions of each of these pins.

Table 9–1. IEEE Std. 1149.1 Pin Descriptions

Pin	Description	Function
TDI	Test data input	Serial input pin for instructions as well as test and programming data. Data is shifted in on the rising edge of TCK.
TDO	Test data output	Serial data output pin for instructions as well as test and programming data. Data is shifted out on the falling edge of TCK. The pin is tri-stated if data is not being shifted out of the device.
TMS	Test mode select	Input pin that provides the control signal to determine the transitions of the Test Access Port (TAP) controller state machine. Transitions within the state machine occur at the rising edge of TCK. Therefore, TMS must be set up before the rising edge of TCK. TMS is evaluated on the rising edge of TCK.
TCK	Test clock input	The clock input to the BST circuitry. Some operations occur at the rising edge, while others occur at the falling edge.
TRST	Test reset input (optional)	Active-low input to asynchronously reset the boundary-scan circuit. This pin should be driven low when not in boundary-scan operation and for non-JTAG users the pin should be permanently tied to GND.

The IEEE Std. 1149.1 BST circuitry requires the following registers:

- The instruction register determines the action to be performed and the data register to be accessed.
- The bypass register is a 1-bit-long data register that provides a minimum-length serial path between TDI and TDO.
- The boundary-scan register is a shift register composed of all the boundary-scan cells of the device.

Figure 9–2 shows a functional model of the IEEE Std. 1149.1 circuitry.

Figure 9–2. IEEE Std. 1149.1 Circuitry

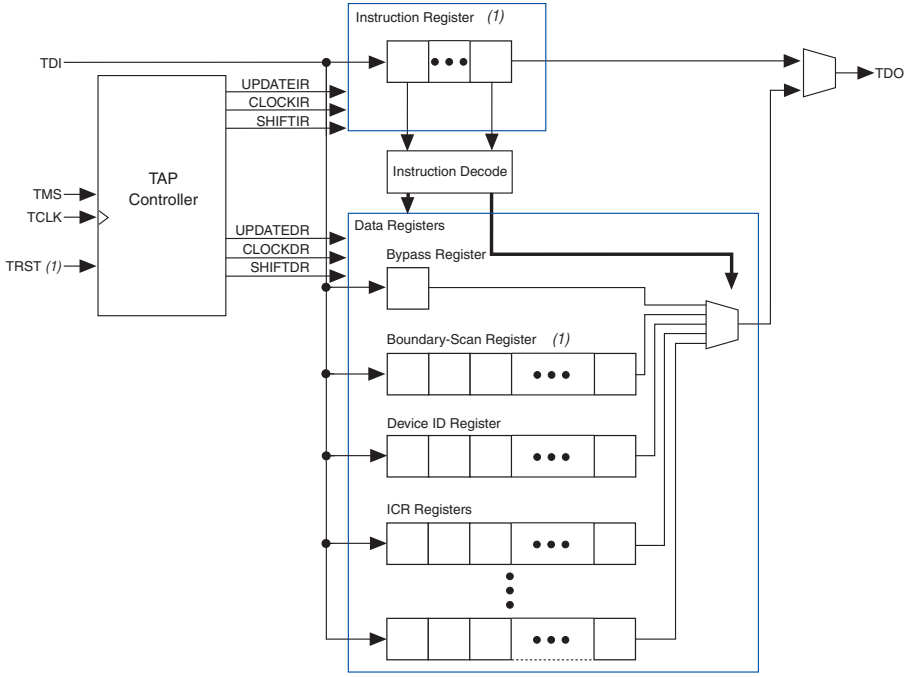

Note to Figure 9–2:
(1) Refer to the appropriate device data sheet for register lengths.

IEEE Std. 1149.1 boundary-scan testing is controlled by a test access port (TAP) controller. For more information on the TAP controller, refer to "IEEE Std. 1149.1 BST Operation Control" on page 9–7. The TMS and TCK pins operate the TAP controller, and the TDI and TDO pins provide the serial path for the data registers. The TDI pin also provides data to the instruction register, which then generates control logic for the data registers.

IEEE Std. 1149.1 Boundary-Scan Register

The boundary-scan register is a large serial shift register that uses the TDI pin as an input and the TDO pin as an output. The boundary-scan register consists of 3-bit peripheral elements that are associated with Stratix II or Stratix II GX I/O pins. You can use the boundary-scan register to test external pin connections or to capture internal data.

Refer to the *Configuration & Testing* chapter in volume 1 of the *Stratix II Device Handbook*, or the *Configuration & Testing* chapter in volume 1 of the *Stratix II GX Device Handbook* for the Stratix II family device boundary-scan register lengths.

Figure 9–3 shows how test data is serially shifted around the periphery of the IEEE Std. 1149.1 device.

Figure 9–3. Boundary-Scan Register

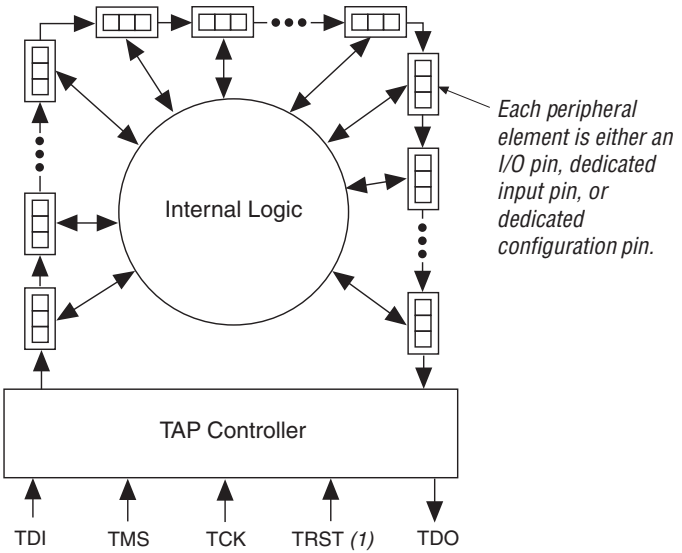

Boundary-Scan Cells of a Stratix II or Stratix II GX Device I/O Pin

The Stratix II or the Stratix II GX device 3-bit boundary-scan cell (BSC) consists of a set of capture registers and a set of update registers. The capture registers can connect to internal device data via the `OUTJ`, `OEJ`, and `PIN_IN` signals, while the update registers connect to external data through the `PIN_OUT`, and `PIN_OE` signals. The global control signals for the IEEE Std. 1149.1 BST registers (such as shift, clock, and update) are generated internally by the TAP controller. The `MODE` signal is generated by a decode of the instruction register. The data signal path for the boundary-scan register runs from the serial data in (SDI) signal to the serial data out (SDO) signal. The scan register begins at the `TDI` pin and ends at the `TDO` pin of the device.

Figure 9–4 shows the Stratix II and Stratix II GX device's user I/O boundary-scan cell.

Figure 9–4. Stratix II and Stratix II GX Device's User I/O BSC with IEEE Std. 1149.1 BST Circuitry

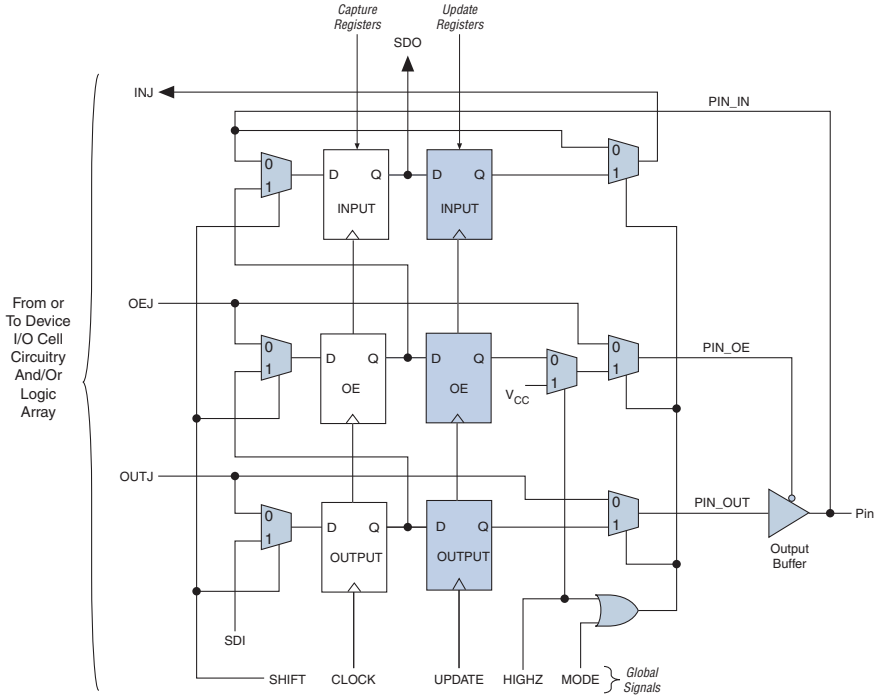

Table 9–2 describes the capture and update register capabilities of all boundary-scan cells within Stratix II and Stratix II GX devices.

Table 9–2. Stratix II and Stratix II GX Device Boundary Scan Cell Descriptions (Part 1 of 2) *Note (1)*

Pin Type	Captures			Drives			Comments
	Output Capture Register	OE Capture Register	Input Capture Register	Output Update Register	OE Update Register	Input Update Register	
User I/O pins	OUTJ	OEJ	PIN_IN	PIN_OUT	PIN_OE	INJ	NA
Dedicated clock input	0	1	PIN_IN	N.C. *(2)*	N.C. *(2)*	N.C. *(2)*	PIN_IN drives to clock network or logic array

Table 9–2. Stratix II and Stratix II GX Device Boundary Scan Cell Descriptions (Part 2 of 2) Note (1)

Pin Type	Captures			Drives			Comments
	Output Capture Register	OE Capture Register	Input Capture Register	Output Update Register	OE Update Register	Input Update Register	
Dedicated input *(3)*	0	1	PIN_IN	N.C. *(2)*	N.C. *(2)*	N.C. *(2)*	PIN_IN drives to control logic
Dedicated bidirectional (open drain) *(4)*	0	OEJ	PIN_IN	N.C. *(2)*	N.C. *(2)*	N.C. *(2)*	PIN_IN drives to configuration control
Dedicated bidirectional *(5)*	OUTJ	OEJ	PIN_IN	N.C. *(2)*	N.C. *(2)*	N.C. *(2)*	PIN_IN drives to configuration control and OUTJ drives to output buffer
Dedicated output *(6)*	OUTJ	0	0	N.C. *(2)*	N.C. *(2)*	N.C. *(2)*	OUTJ drives to output buffer

Notes to Table 9–2:

(1) TDI, TDO, TMS, TCK, all V_{CC} and GND pin types, VREF, and TEMP_DIODE pins do not have BSCs.
(2) No Connect (N.C.).
(3) This includes pins PLL_ENA, nCONFIG, MSEL0, MSEL1, MSEL2, MSEL3, nCE, VCCSEL, PORSEL, and nIO_PULLUP.
(4) This includes pins CONF_DONE and nSTATUS.
(5) This includes pin DCLK.
(6) This includes pin nCEO.

IEEE Std. 1149.1 BST Operation Control

Stratix II and Stratix II GX devices implement the following IEEE Std. 1149.1 BST instructions:

- SAMPLE/PRELOAD instruction mode is used to take snapshot of the device data without interrupting normal device operations
- EXTEST instruction mode is used to check external pin connections between devices
- BYPASS instruction mode is used when an instruction code consisting of all ones is loaded into the instruction register
- IDCODE instruction mode is used to identify the devices in an IEEE Std. 1149.1 chain
- USERCODE instruction mode is used to examine the user electronic signature within the device along an IEEE Std. 1149.1 chain.

- CLAMP instruction mode is used to allow the state of the signals driven from the pins to be determined from the boundary-scan register while the bypass register is selected as the serial path between the TDI and TDO ports
- HIGHZ instruction mode sets all of the user I/O pins to an inactive drive state

The BST instruction length is 10 bits. These instructions are described later in this chapter.

For summaries of the BST instructions and their instruction codes, refer to the *Configuration & Testing* chapter in volume 1 of the *Stratix II Device Handbook*, or the *Configuration & Testing* chapter in volume 1 of the *Stratix II GX Device Handbook*.

The IEEE Std. 1149.1 TAP controller, a 16-state state machine clocked on the rising edge of TCK, uses the TMS pin to control IEEE Std. 1149.1 operation in the device. Figure 9–5 shows the TAP controller state machine.

Figure 9–5. IEEE Std. 1149.1 TAP Controller State Machine

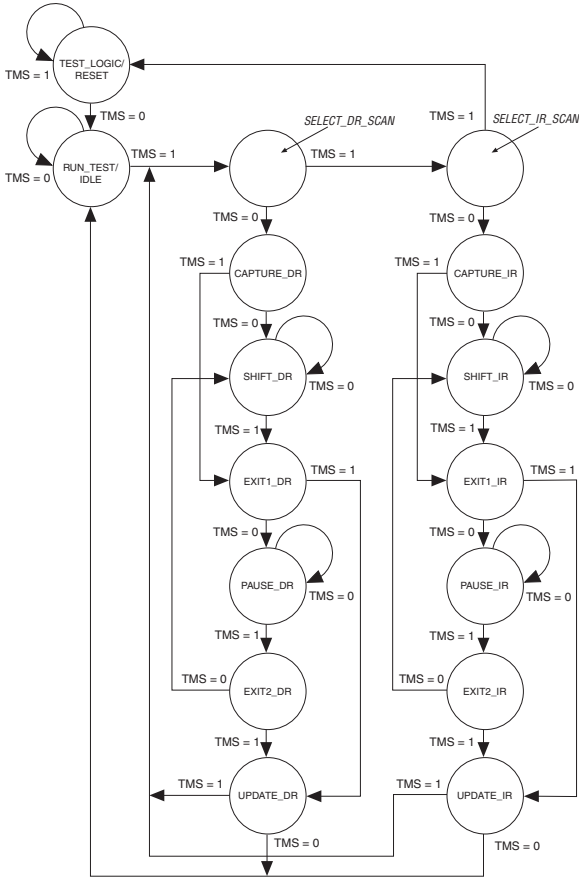

When the TAP controller is in the TEST_LOGIC/RESET state, the BST circuitry is disabled, the device is in normal operation, and the instruction register is initialized with IDCODE as the initial instruction. At device power-up, the TAP controller starts in this TEST_LOGIC/RESET state. In addition, forcing the TAP controller to the TEST_LOGIC/RESET state is done by holding TMS high for five TCK clock cycles or by holding the TRST pin low. Once in the TEST_LOGIC/RESET state, the TAP controller remains in this state as long as TMS is held high (while TCK is clocked) or TRST is held low.

Figure 9–6 shows the timing requirements for the IEEE Std. 1149.1 signals.

Figure 9–6. IEEE Std. 1149.1 Timing Waveforms

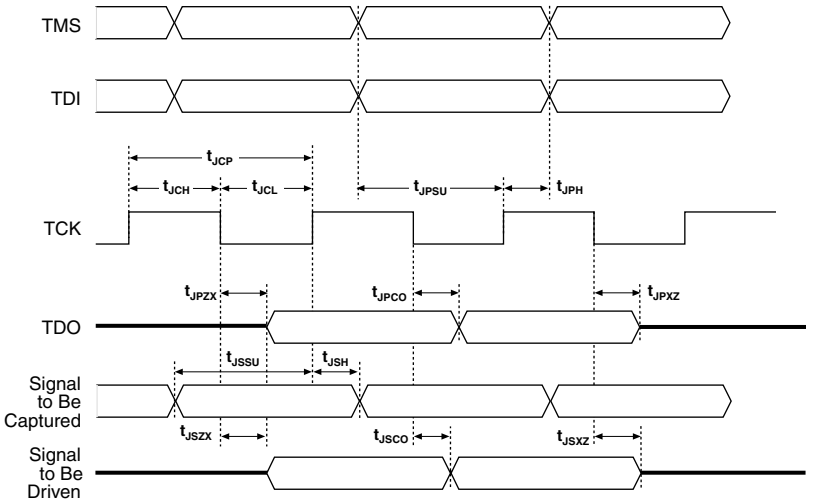

To start IEEE Std. 1149.1 operation, select an instruction mode by advancing the TAP controller to the shift instruction register (SHIFT_IR) state and shift in the appropriate instruction code on the TDI pin. The waveform diagram in Figure 9–7 represents the entry of the instruction code into the instruction register. Figure 9–7 shows the values of TCK, TMS, TDI, TDO, and the states of the TAP controller. From the RESET state, TMS is clocked with the pattern 01100 to advance the TAP controller to SHIFT_IR.

Figure 9–7. Selecting the Instruction Mode

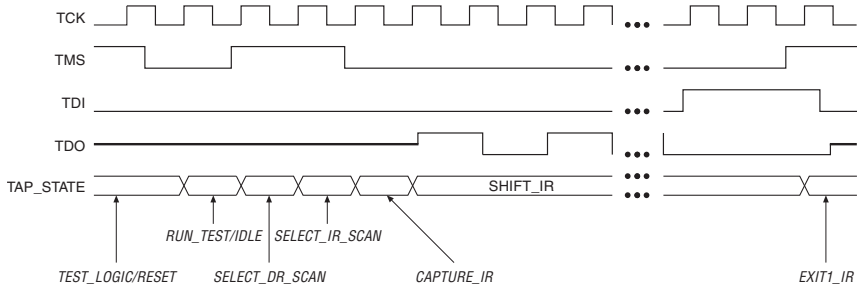

The TDO pin is tri-stated in all states except in the SHIFT_IR and SHIFT_DR states. The TDO pin is activated at the first falling edge of TCK after entering either of the shift states and is tri-stated at the first falling edge of TCK after leaving either of the shift states.

When the SHIFT_IR state is activated, TDO is no longer tri-stated, and the initial state of the instruction register is shifted out on the falling edge of TCK. TDO continues to shift out the contents of the instruction register as long as the SHIFT_IR state is active. The TAP controller remains in the SHIFT_IR state as long as TMS remains low.

During the SHIFT_IR state, an instruction code is entered by shifting data on the TDI pin on the rising edge of TCK. The last bit of the instruction code is clocked at the same time that the next state, EXIT1_IR, is activated. Set TMS high to activate the EXIT1_IR state. Once in the EXIT1_IR state, TDO becomes tri-stated again. TDO is always tri-stated except in the SHIFT_IR and SHIFT_DR states. After an instruction code is entered correctly, the TAP controller advances to serially shift test data in one of three modes. The three serially shift test data instruction modes are discussed on the following pages:

- "SAMPLE/PRELOAD Instruction Mode" on page 9–11
- "EXTEST Instruction Mode" on page 9–13
- "BYPASS Instruction Mode" on page 9–15

SAMPLE/PRELOAD Instruction Mode

The SAMPLE/PRELOAD instruction mode allows you to take a snapshot of device data without interrupting normal device operation. However, this instruction is most often used to preload the test data into the update registers prior to loading the EXTEST instruction. Figure 9–8 shows the capture, shift, and update phases of the SAMPLE/PRELOAD mode.

Figure 9–8. IEEE Std. 1149.1 BST SAMPLE/PRELOAD Mode

Capture Phase

In the capture phase, the signals at the pin, OEJ and OUTJ, are loaded into the capture registers. The CLOCK signals is supplied by the TAP controller's CLOCKDR output. The data retained in these registers consists of signals from normal device operation.

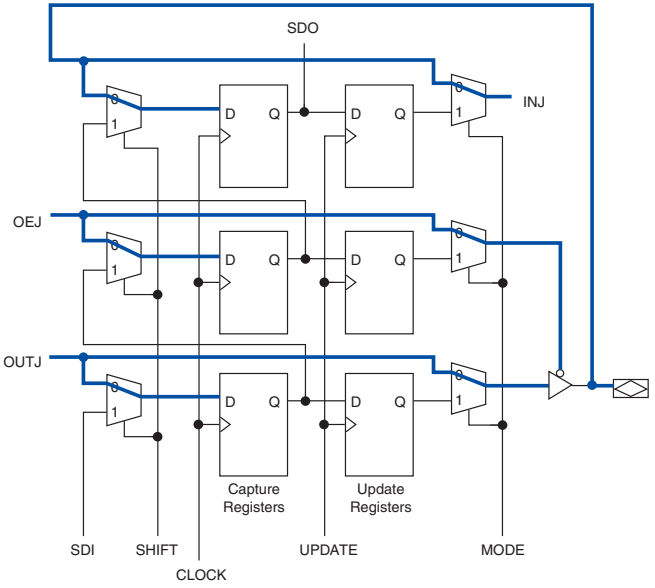

Shift and Update Phases

In the shift phase, the previously captured signals at the pin, OEJ and OUTJ, are shifted out of the boundary-scan register via the TDO pin using CLOCK. As data is shifted out, the patterns for the next test can be shifted in via the TDI pin.

In the update phase, data is transferred from the capture to the UPDATE registers using the UPDATE clock. The data stored in the UPDATE registers can be used for the EXTEST instruction.

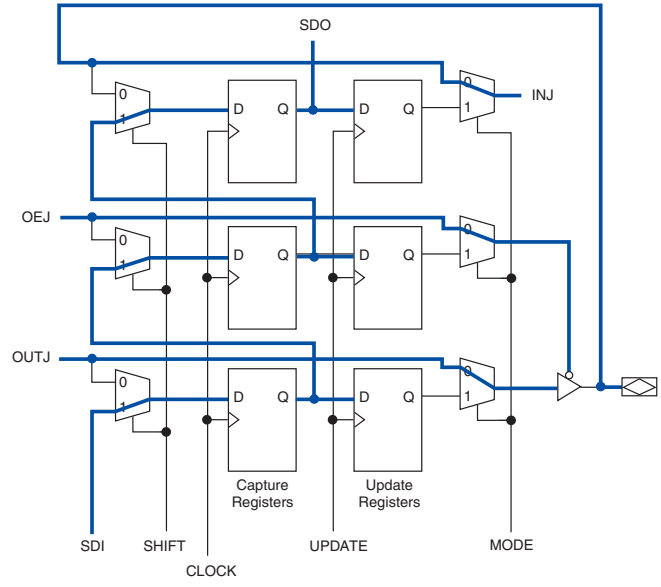

During the capture phase, multiplexers preceding the capture registers select the active device data signals. This data is then clocked into the capture registers. The multiplexers at the outputs of the update registers also select active device data to prevent functional interruptions to the device. During the shift phase, the boundary-scan shift register is formed by clocking data through capture registers around the device periphery and then out of the TDO pin. The device can simultaneously shift new test data into TDI and replace the contents of the capture registers. During the update phase, data in the capture registers is transferred to the update registers. This data can then be used in the EXTEST instruction mode. Refer to "EXTEST Instruction Mode" on page 9–13 for more information.

Figure 9–9 shows the SAMPLE/PRELOAD waveforms. The SAMPLE/PRELOAD instruction code is shifted in through the TDI pin. The TAP controller advances to the CAPTURE_DR state and then to the SHIFT_DR state, where it remains if TMS is held low. The data that was present in the capture registers after the capture phase is shifted out of the TDO pin. New test data shifted into the TDI pin appears at the TDO pin after being clocked through the entire boundary-scan register. Figure 9–9 shows that the instruction code at TDI does not appear at the TDO pin until after the capture register data is shifted out. If TMS is held high on two consecutive TCK clock cycles, the TAP controller advances to the UPDATE_DR state for the update phase.

Figure 9–9. SAMPLE/PRELOAD Shift Data Register Waveforms

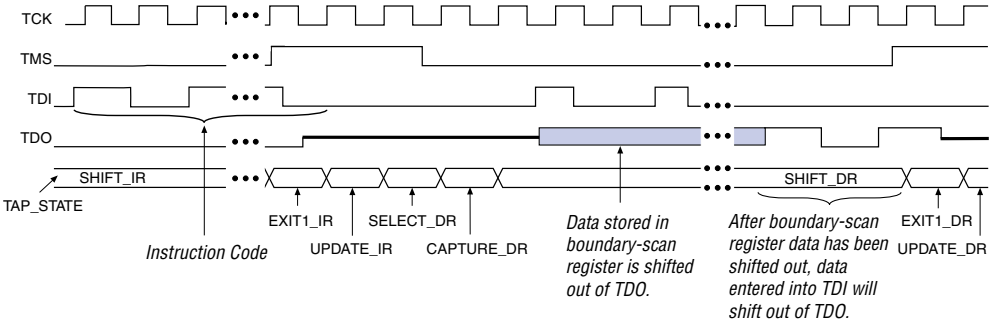

EXTEST Instruction Mode

The EXTEST instruction mode is used primarily to check external pin connections between devices. Unlike the SAMPLE/PRELOAD mode, EXTEST allows test data to be forced onto the pin signals. By forcing known logic high and low levels on output pins, opens and shorts can be detected at pins of any device in the scan chain.

Figure 9–10 shows the capture, shift, and update phases of the EXTEST mode.

Figure 9–10. IEEE Std. 1149.1 BST EXTEST Mode

Capture Phase

In the capture phase, the signals at the pin, OEJ and OUTJ, are loaded into the capture registers. The CLOCK signals is supplied by the TAP controller's CLOCKDR output. Previously retained data in the update registers drive the PIN_IN, INJ, and allows the I/O pin to tri-state or drive a signal out.

A "1" in the OEJ update register tri-states the output buffer.

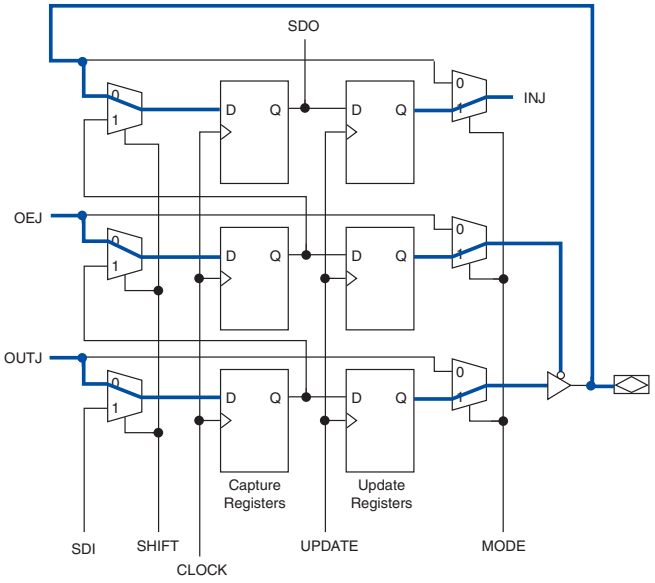

Shift and Update Phases

In the shift phase, the previously captured signals at the pin, OEJ and OUTJ, are shifted out of the boundary-scan register via the TDO pin using CLOCK. As data is shifted out, the patterns for the next test can be shifted in via the TDI pin.

In the update phase, data is transferred from the capture registers to the update registers using the UPDATE clock. The update registers then drive the PIN_IN, INJ, and allow the I/O pin to tri-state or drive a signal out.

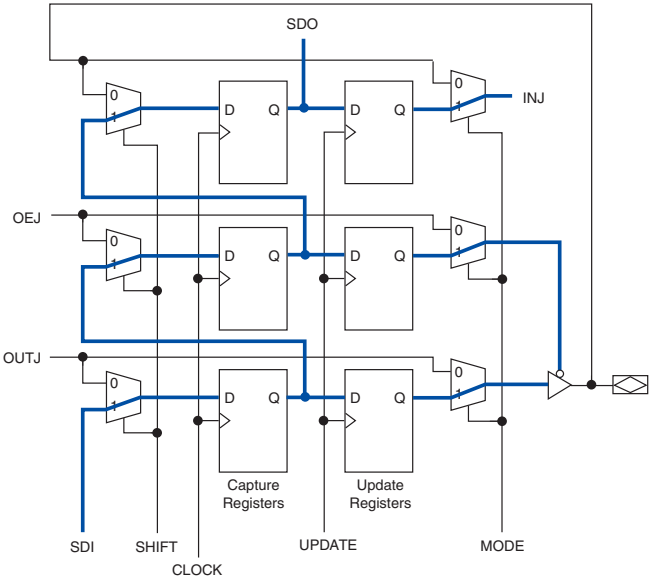

EXTEST selects data differently than SAMPLE/PRELOAD. EXTEST chooses data from the update registers as the source of the output and output enable signals. Once the EXTEST instruction code is entered, the multiplexers select the update register data. Thus, data stored in these registers from a previous EXTEST or SAMPLE/PRELOAD test cycle can be forced onto the pin signals. In the capture phase, the results of this test data are stored in the capture registers and then shifted out of TDO during the shift phase. New test data can then be stored in the update registers during the update phase.

The EXTEST waveform diagram in Figure 9–11 resembles the SAMPLE/PRELOAD waveform diagram, except for the instruction code. The data shifted out of TDO consists of the data that was present in the capture registers after the capture phase. New test data shifted into the TDI pin appears at the TDO pin after being clocked through the entire boundary-scan register.

Figure 9–11. EXTEST Shift Data Register Waveforms

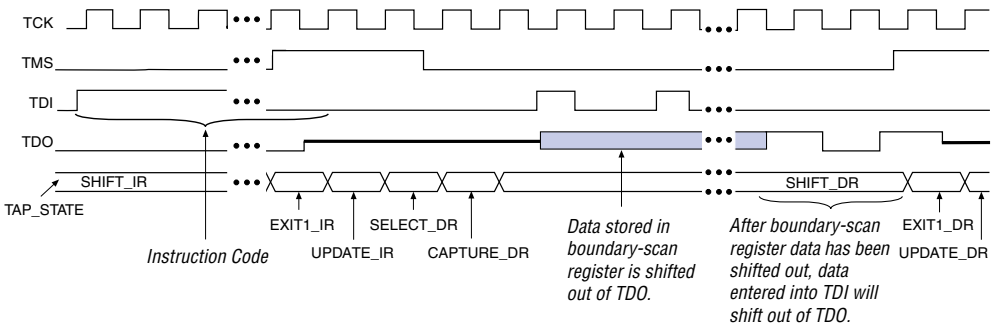

BYPASS Instruction Mode

The BYPASS mode is activated when an instruction code of all ones is loaded in the instruction register. The waveforms in Figure 9–12 show how scan data passes through a device once the TAP controller is in the SHIFT_DR state. In this state, data signals are clocked into the bypass register from TDI on the rising edge of TCK and out of TDO on the falling edge of the same clock pulse.

Figure 9–12. BYPASS Shift Data Register Waveforms

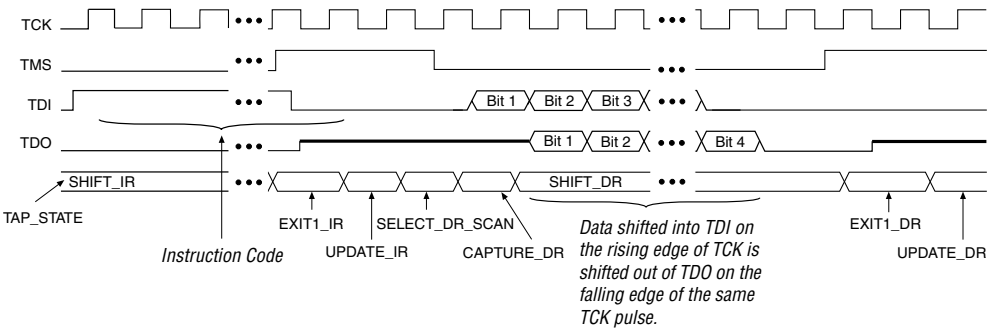

IDCODE Instruction Mode

The IDCODE instruction mode is used to identify the devices in an IEEE Std. 1149.1 chain. When IDCODE is selected, the device identification register is loaded with the 32-bit vendor-defined identification code. The device ID register is connected between the TDI and TDO ports, and the device IDCODE is shifted out.

For more information on the IDCODE for Stratix II and Stratix II GX devices refer to the *Configuration & Testing* chapter in volume 1 of the *Stratix II Device Handbook*, or the *Configuration & Testing* chapter in volume 1 of the *Stratix II GX Device Handbook*.

USERCODE Instruction Mode

The USERCODE instruction mode is used to examine the user electronic signature (UES) within the devices along an IEEE Std. 1149.1 chain. When this instruction is selected, the device identification register is connected between the TDI and TDO ports. The user-defined UES is shifted into the device ID register in parallel from the 32-bit USERCODE register. The UES is then shifted out through the device ID register.

The UES value is not user defined until after the device is configured. Before configuration, the UES value is set to the default value.

CLAMP Instruction Mode

The CLAMP instruction mode is used to allow the state of the signals driven from the pins to be determined from the boundary-scan register while the bypass register is selected as the serial path between the TDI and TDO ports. The state of all signals driven from the pins are completely defined by the data held in the boundary-scan register.



If you are testing after configuring the device, the programmable weak pull-up resister or the bus hold feature overrides the CLAMP value (the value stored in the update register of the boundary-scan cell) at the pin.

HIGHZ Instruction Mode

The HIGHZ instruction mode sets all of the user I/O pins to an inactive drive state. These pins are tri-stated until a new JTAG instruction is executed. When this instruction is loaded into the instruction register, the bypass register is connected between the TDI and TDO ports.



If you are testing after configuring the device, the programmable weak pull-up resistor or the bus hold feature overrides the HIGHZ value at the pin.

I/O Voltage Support in JTAG Chain

The JTAG chain supports several devices. However, you should use caution if the chain contains devices that have different V_{CCIO} levels. The output voltage level of the TDO pin must meet the specifications of the TDI pin it drives. The TDI pin is powered by V_{CCPD} (3.3 V). For Stratix II and Stratix II GX devices, the V_{CCIO} power supply of bank 4 powers the TDO pin. Table 9–3 shows board design recommendations to ensure proper JTAG chain operation.

You can interface the TDI and TDO lines of the devices that have different V_{CCIO} levels by inserting a level shifter between the devices. If possible, you should build the JTAG chain in such a way that a device with a higher V_{CCIO} level drives to a device with an equal or lower V_{CCIO} level. This way, a level shifter is used only to shift the TDO level to a level acceptable to the JTAG tester. Figure 9–13 shows the JTAG chain of mixed voltages and how a level shifter is inserted in the chain.

Table 9–3. Supported TDO/TDI Voltage Combinations

Device	TDI Input Buffer Power	Stratix II and Stratix II GX TDO V_{CCIO} Voltage Level in I/O Bank 4			
		V_{CCIO} = 3.3 V	V_{CCIO} = 2.5 V	V_{CCIO} = 1.8 V	V_{CCIO} = 1.5 V
Stratix II and Stratix II GX	Always V_{CCPD} (3.3V)	✓ (1)	✓ (2)	✓ (3)	level shifter required
Non-Stratix II	VCC = 3.3 V	✓ (1)	✓ (2)	✓ (3)	level shifter required
	VCC = 2.5 V	✓ (1), (4)	✓ (2)	✓ (3)	level shifter required
	VCC = 1.8 V	✓ (1), (4)	✓ (2), (5)	✓	level shifter required
	VCC = 1.5 V	✓ (1), (4)	✓ (2), (5)	✓ (6)	✓

Notes to Table 9–3:

(1) The TDO output buffer meets V_{OH} (MIN) = 2.4 V.
(2) The TDO output buffer meets V_{OH} (MIN) = 2.0 V.
(3) An external 250-Ω pull-up resistor is not required, but recommended if signal levels on the board are not optimal.
(4) Input buffer must be 3.3-V tolerant.
(5) Input buffer must be 2.5-V tolerant.
(6) Input buffer must be 1.8-V tolerant.

Figure 9–13. JTAG Chain of Mixed Voltages

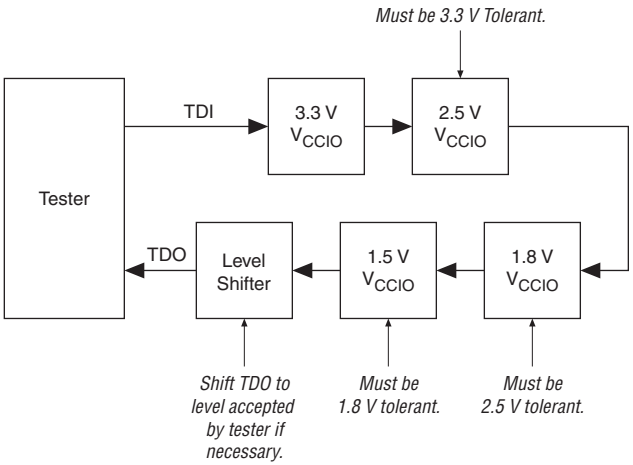

Using IEEE Std. 1149.1 BST Circuitry

Stratix II and Stratix II GX devices have dedicated JTAG pins and the IEEE Std. 1149.1 BST circuitry is enabled upon device power-up. Not only can you perform BST on Stratix II and Stratix II GX FPGAs before and after, but also during configuration. Stratix II and Stratix II GX FPGAs support the BYPASS, IDCODE and SAMPLE instructions during configuration without interrupting configuration. To send all other JTAG instructions, you must interrupt configuration using the CONFIG_IO instruction.

The CONFIG_IO instruction allows you to configure I/O buffers via the JTAG port, and when issued, interrupts configuration. This instruction allows you to perform board-level testing prior to configuring the Stratix II or the Stratix II GX FPGA or you can wait for the configuration device to complete configuration. Once configuration is interrupted and JTAG BST is complete, you must reconfigure the part via JTAG (PULSE_CONFIG instruction) or by pulsing nCONFIG low.



When you perform JTAG boundary-scan testing before configuration, the nCONFIG pin must be held low.

The chip-wide reset (DEV_CLRn) and chip-wide output enable (DEV_OE) pins on Stratix II and Stratix II GX devices do not affect JTAG boundary-scan or configuration operations. Toggling these pins does not disrupt BST operation (other than the expected BST behavior).

When you design a board for JTAG configuration of Stratix II or Stratix II GX devices, you need to consider the connections for the dedicated configuration pins.



For more information on using the IEEE Std.1149.1 circuitry for device configuration, refer to the *Configuring Stratix II & Stratix II GX Devices* chapter in volume 2 of the *Stratix II Device Handbook* or the *Configuring Stratix II & Stratix II GX Devices* chapter in volume 2 of the *Stratix II GX Device Handbook*.

BST for Configured Devices

For a configured device, the input buffers are turned off by default for I/O pins that are set as output only in the design file. You cannot sample on the configured device output pins with the default BSDL file when the input buffers are turned off. You can set the Quartus II software to always enable the input buffers on a configured device so it behaves the same as an unconfigured device for boundary-scan testing, allowing sample function on output pins in the design. This aspect can cause slight increase in standby current because the unused input buffer is always on. In the Quartus II software, do the following:

1. Choose **Settings** (Assignments menu).

2. Click **Assembler**.

3. Turn on **Always Enable Input Buffers**.

Disabling IEEE Std. 1149.1 BST Circuitry

The IEEE Std. 1149.1 BST circuitry for Stratix II and Stratix II GX devices is enabled upon device power-up. Because the IEEE Std. 1149.1 BST circuitry is used for BST or in-circuit reconfiguration, you must enable the circuitry only at specific times as mentioned in, "Using IEEE Std. 1149.1 BST Circuitry" on page 9–19.



If you are not using the IEEE Std. 1149.1 circuitry in Stratix II or Stratix II GX, then you should permanently disable the circuitry to ensure that you do not inadvertently enable when it is not required.

Table 9–4 shows the pin connections necessary for disabling the IEEE Std. 1149.1 circuitry in Stratix II and Stratix II GX devices.

Table 9–4. Disabling IEEE Std. 1149.1 Circuitry

JTAG Pins *(1)*	Connection for Disabling
TMS	V_{CC}
TCK	GND
TDI	V_{CC}
TDO	Leave open
TRST	GND

Note to Table 9–4:
(1) There is no software option to disable JTAG in Stratix II or Stratix II GX devices. The JTAG pins are dedicated.

Guidelines for IEEE Std. 1149.1 Boundary-Scan Testing

Use the following guidelines when performing boundary-scan testing with IEEE Std. 1149.1 devices:

- If the "10..." pattern does not shift out of the instruction register via the TDO pin during the first clock cycle of the SHIFT_IR state, the TAP controller did not reach the proper state. To solve this problem, try one of the following procedures:
  - Verify that the TAP controller has reached the SHIFT_IR state correctly. To advance the TAP controller to the SHIFT_IR state, return to the RESET state and send the code 01100 to the TMS pin.

- Check the connections to the V_{CC}, GND, JTAG, and dedicated configuration pins on the device.

- Perform a SAMPLE/PRELOAD test cycle prior to the first EXTEST test cycle to ensure that known data is present at the device pins when you enter the EXTEST mode. If the OEJ update register contains a 0, the data in the OUTJ update register is driven out. The state must be known and correct to avoid contention with other devices in the system.
- Do not perform EXTEST testing during ICR. This instruction is supported before or after ICR, but not during ICR. Use the CONFIG_IO instruction to interrupt configuration and then perform testing, or wait for configuration to complete.
- If performing testing before configuration, hold nCONFIG pin low.
- After configuration, any pins in a differential pin pair cannot be tested. Therefore, performing BST after configuration requires editing of BSC group definitions that correspond to these differential pin pairs. The BSC group should be redefined as an internal cell.

  Refer to the Boundary-Scan Description Language (BSDL) file for more information on editing.

For more information on boundary scan testing, contact Altera Applications Group.

Boundary-Scan Description Language (BSDL) Support

The Boundary-Scan Description Language (BSDL), a subset of VHDL, provides a syntax that allows you to describe the features of an IEEE Std. 1149.1 BST-capable device that can be tested. Test software development systems then use the BSDL files for test generation, analysis, and failure diagnostics.

For more information, or to receive BSDL files for IEEE Std. 1149.1-compliant Stratix II and Stratix II GX devices, visit the Altera web site at www.altera.com.

Conclusion

The IEEE Std. 1149.1 BST circuitry available in Stratix II and Stratix II GX devices provides a cost-effective and efficient way to test systems that contain devices with tight lead spacing. Circuit boards with Altera and other IEEE Std. 1149.1-compliant devices can use the EXTEST, SAMPLE/PRELOAD, and BYPASS modes to create serial patterns that internally test the pin connections between devices and check device operation.

References

Bleeker, H., P. van den Eijnden, and F. de Jong. *Boundary-Scan Test: A Practical Approach*. Eindhoven, The Netherlands: Kluwer Academic Publishers, 1993.

Institute of Electrical and Electronics Engineers, Inc. *IEEE Standard Test Access Port and Boundary-Scan Architecture* (IEEE Std 1149.1-2001). New York: Institute of Electrical and Electronics Engineers, Inc., 2001.

Maunder, C. M., and R. E. Tulloss. *The Test Access Port and Boundary-Scan Architecture*. Los Alamitos: IEEE Computer Society Press, 1990.

Referenced Documents

This chapter references the following documents:

- *Configuration & Testing* chapter in volume 1 of the *Stratix II Device Handbook*
- *Configuration & Testing* chapter in volume 1 of the *Stratix II GX Device Handbook*
- *Configuring Stratix II & Stratix II GX Devices chapter in volume 2 of the Stratix II Device Handbook*
- *Configuring Stratix II & Stratix II GX Devices chapter in volume 2 of the Stratix II GX Device Handbook*

Document Revision History

Table 9–5 shows the revision history for this chapter.

Table 9–5. Document Revision History (Part 1 of 2)

Date and Document Version	Changes Made	Summary of Changes
January 2008, v3.3	Added "Referenced Documents" section.	—
	Minor text edits.	—
No change	For the *Stratix II GX Device Handbook* only: Formerly chapter 14. The chapter number changed due to the addition of the *Stratix II GX Dynamic Reconfiguration* chapter. No content change.	—
February 2007 v3.2	Added the "Document Revision History" section to this chapter.	—
April 2006, v3.1	Chapter updated as part of the *Stratix II Device Handbook* update.	—

Table 9–5. Document Revision History (Part 2 of 2)

Date and Document Version	Changes Made	Summary of Changes
No change	Formerly chapter 13. Chapter number change only due to chapter addition to Section I in February 2006; no content change.	—
October 2005 v3.0	Added chapter to the *Stratix II GX Device Handbook*.	—

Section VI. PCB Layout Guidelines

This section provides information for board layout designers to successfully layout their boards for Stratix® II devices. These chapters contain the required PCB layout guidelines and package specifications.

This section contains the following chapters:

- Chapter 10, Package Information for Stratix II & Stratix II GX Devices
- Chapter 11, High-Speed Board Layout Guidelines

Revision History

Refer to each chapter for its own specific revision history. For information on when each chapter was updated, refer to the Chapter Revision Dates section, which appears in the full handbook.

10. Package Information for Stratix II & Stratix II GX Devices

SII52010-4.3

Introduction

This chapter provides package information for Altera® Stratix® II and Stratix II GX devices, including:

- Device and package cross reference
- Thermal resistance values
- Package outlines

Tables 10–1 and 10–2 show which Altera Stratix II and Stratix II GX devices, respectively, are available in FineLine BGA® (FBGA) packages.

Table 10–1. Stratix II Devices in FBGA Packages

Device	Package	Pins
EP2S15	Flip-chip FBGA	484
	Flip-chip FBGA	672
EP2S30	Flip-chip FBGA	484
	Flip-chip FBGA	672
EP2S60	Flip-chip FBGA	484
	Flip-chip FBGA	672
	Flip-chip FBGA	1,020
EP2S90	Flip-chip FBGA	484
	Flip-chip FBGA	780
	Flip-chip FBGA	1,020
	Flip-chip FBGA	1,508
EP2S130	Flip-chip FBGA	780
	Flip-chip FBGA	1,020
	Flip-chip FBGA	1,508
EP2S180	Flip-chip FBGA	1,020
	Flip-chip FBGA	1,508

Table 10–2. Stratix II GX Devices in FBGA Packages		
Device	**Package**	**Pins**
EP2SGX30	Flip-chip FBGA	780
EP2SGX60	Flip-chip FBGA	780
	Flip-chip FBGA	1,152
EP2SGX90	Flip-chip FBGA	1,152
	Flip-chip FBGA	1,508
EP2SGX130	Flip-chip FBGA	1,508

Thermal Resistance

Thermal resistance values for Stratix II devices are provided for a board that meets JDEC specifications and for a typical board. The following values are provided:

- θ_{JA} (°C/W) still air—Junction-to-ambient thermal resistance with no air flow when a heat sink is not used.
- θ_{JA} (°C/W) 100 ft./min.—Junction-to-ambient thermal resistance with 100 ft./min. airflow when a heat sink is not used.
- θ_{JA} (°C/W) 200 ft./min.—Junction-to-ambient thermal resistance with 200 ft./min. airflow when a heat sink is not used.
- θ_{JA} (°C/W) 400 ft./min.—Junction-to-ambient thermal resistance with 400 ft./min. airflow when a heat sink is not used.
- θ_{JC}—Junction-to-case thermal resistance for device.
- θ_{JB}—Junction-to-board thermal resistance for device.

Tables 10–3 provides θ_{JA} (junction-to-ambient thermal resistance), θ_{JC} (junction-to-case thermal resistance), and θ_{JB} (junction-to-board thermal resistance) values for Stratix II devices on a board meeting JEDEC specifications for thermal resistance calculation. The JEDEC board specifications require two signal and two power/ground planes and are available at **www.jedec.org**.

Table 10–3. Stratix II Device Thermal Resistance for Boards Meeting JEDEC Specifications (Part 1 of 2)								
Device	**Pin Count**	**Package**	**θ_{JA} (° C/W) Still Air**	**θ_{JA} (° C/W) 100 ft./min.**	**θ_{JA} (° C/W) 200 ft./min.**	**θ_{JA} (° C/W) 400 ft./min.**	**θ_{JC} (° C/W)**	**θ_{JB} (° C/W)**
EP2S15	484	FBGA	13.1	11.1	9.6	8.3	0.36	4.19
	672	FBGA	12.2	10.2	8.8	7.6	0.36	4.09
EP2S30	484	FBGA	12.6	10.6	9.1	7.9	0.21	3.72
	672	FBGA	11.7	9.7	8.3	7.1	0.21	3.35

Table 10–3. Stratix II Device Thermal Resistance for Boards Meeting JEDEC Specifications (Part 2 of 2)

Device	Pin Count	Package	θ_{JA} (° C/W) Still Air	θ_{JA} (° C/W) 100 ft./min.	θ_{JA} (° C/W) 200 ft./min.	θ_{JA} (° C/W) 400 ft./min.	θ_{JC} (° C/W)	θ_{JB} (° C/W)
EP2S60	484	FBGA	12.3	10.3	8.8	7.5	0.13	3.38
	672	FBGA	11.4	9.4	7.8	6.7	0.13	2.95
	1,020	FBGA	10.4	8.4	7.0	5.9	0.13	2.67
EP2S90	484	Hybrid FBGA	12.0	9.9	8.3	7.1	0.07	3.73
	780	FBGA	10.8	8.8	7.3	6.1	0.09	2.59
	1,020	FBGA	9.2	8.2	6.8	5.7	0.10	2.41
	1,508	FBGA	9.3	7.4	6.1	5.0	0.10	2.24
EP2S130	780	FBGA	10.1	8.7	7.2	6.0	0.07	2.44
	1,020	FBGA	9.5	8.1	6.7	5.5	0.07	2.24
	1,508	FBGA	8.6	7.3	6.0	4.8	0.07	2.08
EP2S180	1,020	FBGA	9.0	7.9	6.5	5.4	0.05	2.10
	1,508	FBGA	8.1	7.1	5.8	4.7	0.05	1.94

Table 10–4 provides θ_{JA} (junction-to-ambient thermal resistance), θ_{JC} (junction-to-case thermal resistance), and θ_{JB} (junction-to-board thermal resistance) values for Stratix II devices on a board with the information shown in Table 10–5.

Table 10–4. Stratix II Device Thermal Resistance for Typical Board (Part 1 of 2)

Device	Pin Count	Package	θ_{JA} (° C/W) Still Air	θ_{JA} (° C/W) 100 ft./min.	θ_{JA} (° C/W) 200 ft./min.	θ_{JA} (° C/W) 400 ft./min.	θ_{JC} (° C/W)	θ_{JB} (° C/W)
EP2S15	484	FBGA	12.6	9.9	8.1	6.7	0.36	2.48
	672	FBGA	11.4	8.8	7.2	5.9	0.36	2.41
EP2S30	484	FBGA	12.3	9.6	7.8	6.4	0.21	2.02
	672	FBGA	11.1	8.5	6.9	5.6	0.21	1.95
EP2S60	484	FBGA	12.1	9.4	7.6	6.3	0.13	1.74
	672	FBGA	10.9	8.3	6.6	5.4	0.13	1.56
	1,020	FBGA	9.6	7.1	5.6	4.5	0.13	1.33
EP2S90	484	Hybrid FBGA	11.2	8.9	7.2	5.9	0.07	2.48
	780	FBGA	10.0	7.6	6.1	4.9	0.09	1.22
	1,020	FBGA	9.2	6.9	5.5	4.4	0.10	1.16
	1,508	FBGA	8.2	6.0	4.7	3.7	0.10	1.15

Table 10–4. Stratix II Device Thermal Resistance for Typical Board (Part 2 of 2)

Device	Pin Count	Package	θ_{JA} (° C/W) Still Air	θ_{JA} (° C/W) 100 ft./min.	θ_{JA} (° C/W) 200 ft./min.	θ_{JA} (° C/W) 400 ft./min.	θ_{JC} (° C/W)	θ_{JB} (° C/W)
EP2S130	780	FBGA	9.3	7.5	6.0	4.8	0.07	1.12
	1,020	FBGA	8.5	6.8	5.3	4.2	0.07	1.03
	1,508	FBGA	7.5	5.8	4.6	3.6	0.07	1.02
EP2S180	1,020	FBGA	8.0	6.7	5.3	4.2	0.05	0.93
	1,508	FBGA	7.1	5.7	4.5	3.5	0.05	0.91

Table 10–5. Board Specifications *Notes (1), (2)*

Pin Count	Package	Signal Layers	Power/Ground Layers	Size (mm)
1,508	FBGA	12	12	100 × 100
1,020	FBGA	10	10	93 × 93
780	FBGA	9	9	89 × 89
672	FBGA	8	8	87 × 87
484	FBGA	7	7	83 × 83

Notes to Table 10–5:
(1) Power layer Cu thickness 35 um, Cu 90%.
(2) Signal layer Cu thickness 17 um, Cu 15%.

Table 10–6 provides θ_{JA} (junction-to-ambient thermal resistance) and θ_{JC} (junction-to-case thermal resistance) values for Stratix II devices.

Table 10–6. Stratix II GX Device Thermal Resistance

Device	Pin Count	Package	θ_{JA} (° C/W) Still Air	θ_{JA} (° C/W) 100 ft./min.	θ_{JA} (° C/W) 200 ft./min.	θ_{JA} (° C/W) 400 ft./min.	θ_{JC} (° C/W)
EP2SGX30	780	FBGA	11.1	8.6	7.2	6.0	0.24
EP2SGX60	780	FBGA	10.9	8.4	6.9	5.8	0.15
	1,152	FBGA	9.9	7.5	6.1	5.0	0.15
EP2SGX90	1,152	FBGA	9.6	7.3	5.9	4.9	0.11
	1,508	FBGA	9.0	6.7	5.4	4.4	0.11
EP2SGX130	1,508	FBGA	8.3	6.6	5.3	4.3	0.10

Package Outlines

The package outlines are listed in order of ascending pin count. Altera package outlines meet the requirements of *JEDEC Publication No. 95.*

484-Pin FBGA - Flip Chip

- All dimensions and tolerances conform to ASME Y14.5M – 1994.
- Controlling dimension is in millimeters.
- Pin A1 may be indicated by an ID dot, or a special feature, in its proximity on the package surface.

Tables 10–7 and 10–8 show the package information and package outline figure references, respectively, for the 484-pin FBGA packaging.

Table 10–7. 484-Pin FBGA Package Information

Description	Specification
Ordering code reference	F
Package acronym	FBGA
Substrate material	BT
Solder ball composition	Regular: 63Sn:37Pb (Typ.) Pb-free: Sn:3Ag:0.5Cu (Typ.)
JEDEC outline reference	MS-034 variation: AAJ-1
Maximum lead coplanarity	0.008 inches (0.20 mm)
Weight	5.8 g
Moisture sensitivity level	Printed on moisture barrier bag

Table 10–8. 484-Pin FBGA Package Outline Dimensions (Part 1 of 2)

Symbol	Millimeter		
	Min.	Nom.	Max.
A	–	–	3.50
A1	0.30	–	–
A2	0.25	–	3.00
A3	–	–	2.50
D	23.00 BSC		
E	23.00 BSC		

Table 10–8. 484-Pin FBGA Package Outline Dimensions (Part 2 of 2)			
Symbol	Millimeter		
	Min.	Nom.	Max.
b	0.50	0.60	0.70
e	1.00 BSC		

Figure 10–1 shows a package outline for the 484-pin FineLine BGA packaging.

Figure 10–1. 484-Pin FBGA Package Outline

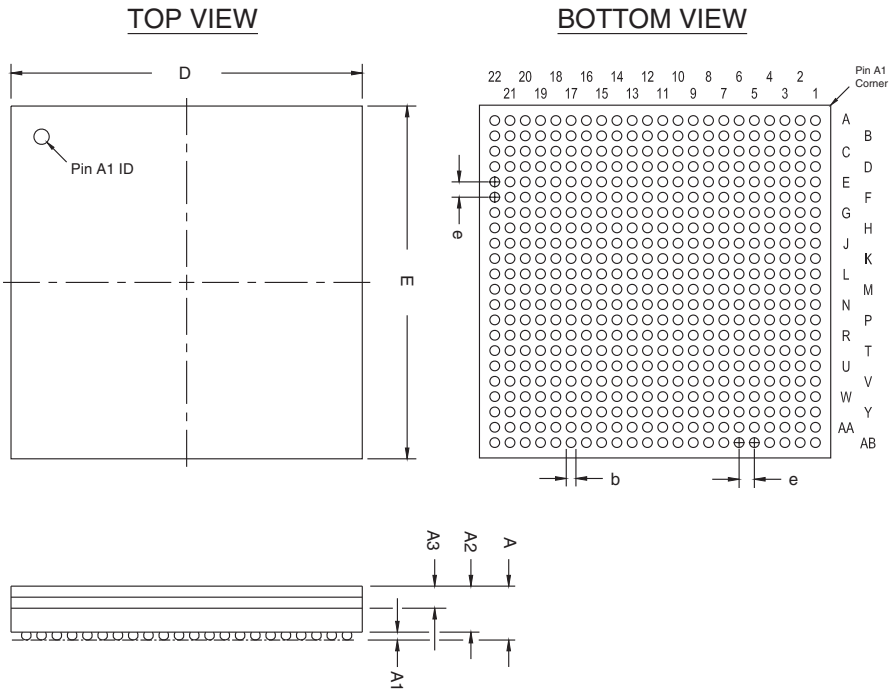

672-Pin FBGA - Flip Chip

- All dimensions and tolerances conform to ASME Y14.5M - 1994.
- Controlling dimension is in millimeters.
- Pin A1 may be indicated by an ID dot, or a special feature, in its proximity on package surface.

Tables 10–9 and 10–10 show the package information and package outline figure references, respectively, for the 672-pin FBGA packaging.

Table 10–9. 672-Pin FBGA Package Information

Description	Specification
Ordering code reference	F
Package acronym	FBGA
Substrate material	BT
Solder ball composition	Regular: 63Sn:37Pb (Typ.) Pb-free: Sn:3Ag:0.5Cu (Typ.)
JEDEC Outline Reference	MS-034 Variation: AAL-1
Maximum Lead coplanarity	0.008 inches (0.20 mm)
Weight	7.7 g
Moisture Sensitivity level	Printed on moisture barrier bag

Table 10–10. 672-Pin FBGA Package Outline Dimensions

Symbol	Millimeters		
	Min.	Nom.	Max.
A	–	–	3.50
A1	0.30	–	–
A2	0.25	–	3.00
A3	–	–	2.50
D	27.00 BSC		
E	27.00 BSC		
b	0.50	0.60	0.70
e	1.00 BSC		

Figure 10–2 shows a package outline for the 672-pin FineLine BGA packaging.

Figure 10–2. 672-Pin FBGA Package Outline

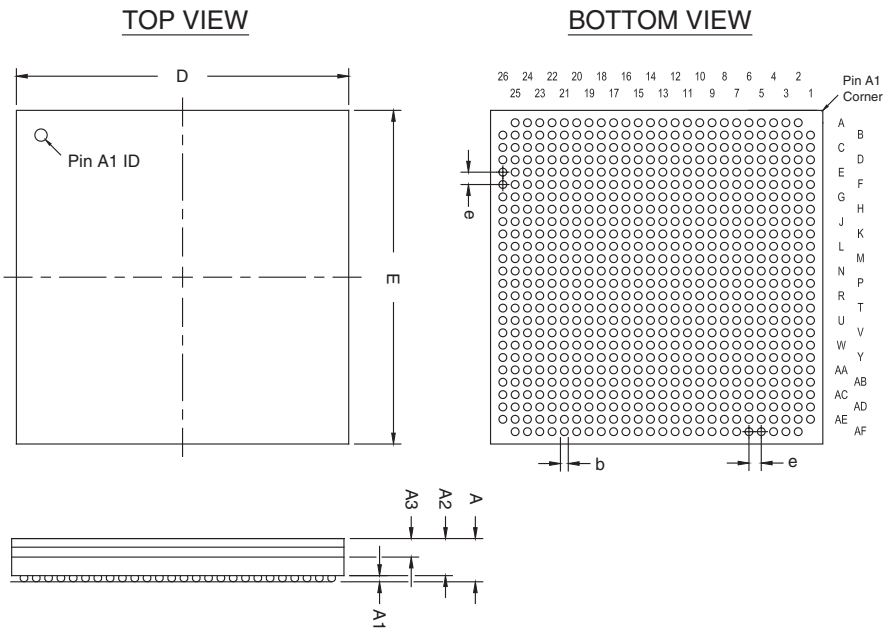

780-Pin FBGA - Flip Chip

- All dimensions and tolerances conform to ASME Y14.5M - 1994.
- Controlling dimension is in millimeters.
- Pin A1 may be indicated by an ID dot, or a special feature, in its proximity on package surface.

Tables 10–11 and 10–12 show the package information and package outline figure references, respectively, for the 780-pin FBGA packaging.

Table 10–11. 780-Pin FBGA Package Information

Description	Specification
Ordering code reference	F
Package acronym	FBGA
Substrate material	BT
Solder ball composition	Regular: 63Sn:37Pb (Typ.) Pb-free: Sn:3Ag:0.5Cu (Typ.)
JEDEC outline reference	MS-034 variation: AAM-1
Maximum lead coplanarity	0.008 inches (0.20 mm)
Weight	8.9 g
Moisture Sensitivity Level	Printed on moisture barrier bag

Table 10–12. 780-Pin FBGA Package Outline Dimensions

Symbol	Millimeters		
	Min.	Nom.	Max.
A	–	–	3.50
A1	0.30	–	–
A2	0.25	–	3.00
A3	–	–	2.50
D	29.00 BSC		
E	29.00 BSC		
b	0.50	0.60	0.70
e	1.00 BSC		

Figure 10–3 shows a package outline for the 780-pin FineLine BGA packaging.

Figure 10–3. 780-Pin FBGA Package Outline

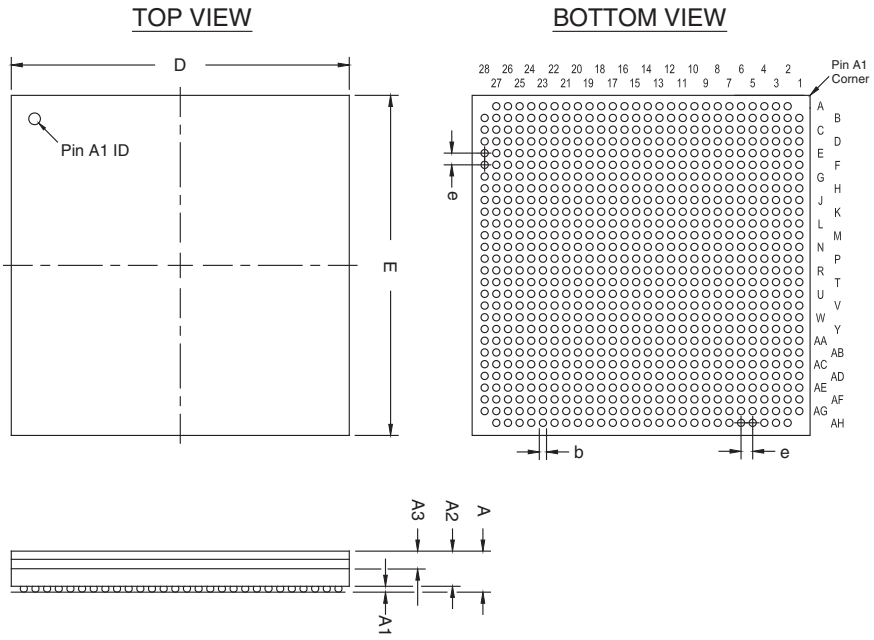

1,020-Pin FBGA - Flip Chip

- All dimensions and tolerances conform to ASME Y14.5M - 1994.
- Controlling dimension is in millimeters.
- Pin A1 may be indicated by an ID dot, or a special feature, in its proximity on package surface.

Tables 10–13 and 10–14 show the package information and package outline figure references, respectively, for the 1,020-pin FBGA packaging.

Table 10–13. 1,020-Pin FBGA Package Information

Description	Specification
Ordering code reference	F
Package acronym	FBGA
Substrate material	BT
Solder ball composition	Regular: 63Sn:37Pb (Typ.) Pb-free: Sn:3Ag:0.5Cu (Typ.)
JEDEC outline reference	MS-034 variation: AAP-1
Maximum lead coplanarity	0.008 inches (0.20 mm)
Weight	11.5 g
Moisture sensitivity level	Printed on moisture barrier bag

Table 10–14. 1,020-Pin FBGA Package Outline Dimensions

Symbol	Millimeters		
	Min.	Nom.	Max.
A	–	–	3.50
A1	0.30	–	–
A2	0.25	–	3.00
A3	–	–	2.50
D	33.00 BSC		
E	33.00 BSC		
b	0.50	0.60	0.70
e	1.00 BSC		

Figure 10–4 shows a package outline for the 1,020-pin FineLine BGA packaging.

Figure 10–4. 1,020-Pin FBGA Package Outline

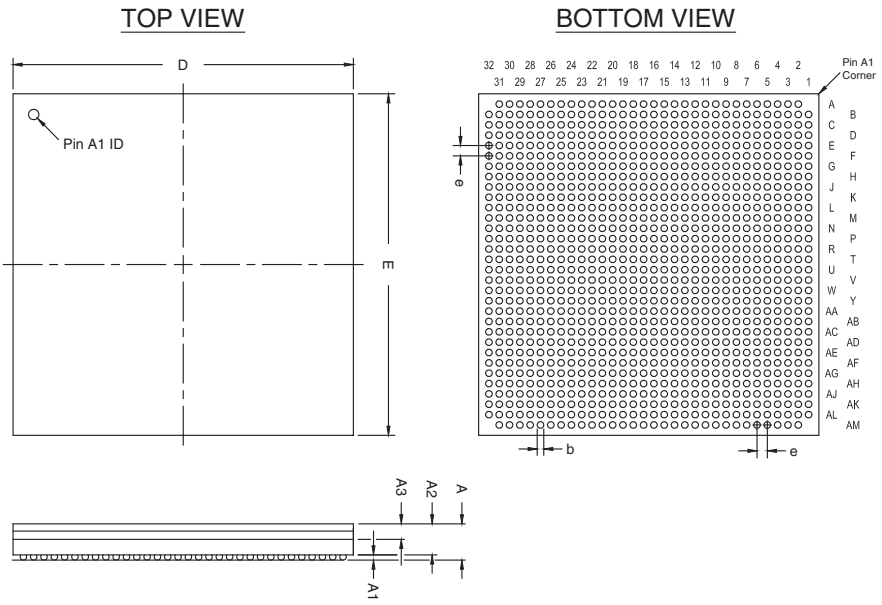

1,152-Pin FBGA - Flip Chip

- All dimensions and tolerances conform to ASME Y14.5M - 1994.
- Controlling dimension is in millimeters.
- Pin A1 may be indicated by an ID dot, or a special feature, in its proximity on package surface.

Tables 10–15 and 10–16 show the package information and package outline figure references, respectively, for the 1,152-pin FBGA packaging.

Table 10–15. 1,152-Pin FBGA Package Information

Description	Specification
Ordering code reference	F
Package acronym	FBGA
Substrate material	BT
Solder ball composition	Regular: 63Sn:37Pb (Typ.) Pb-free: Sn:3Ag:0.5Cu (Typ.)
JEDEC outline reference	MS-034 variation: AAR-1
Maximum lead coplanarity	0.008 inches (0.20 mm)
Weight	12.0 g
Moisture sensitivity level	Printed on moisture barrier bag

Table 10–16. 1,152-Pin FBGA Package Outline Dimensions

Symbol	Millimeters		
	Min.	Nom.	Max.
A	–	–	3.50
A1	0.30	–	–
A2	0.25	–	3.00
A3	–	–	2.50
D	35.00 BSC		
E	35.00 BSC		
b	0.50	0.60	0.70
e	1.00 BSC		

Figure 10–5 shows a package outline for the 1,152-pin FineLine BGA packaging.

Figure 10–5. 1,152-Pin FBGA Package Outline

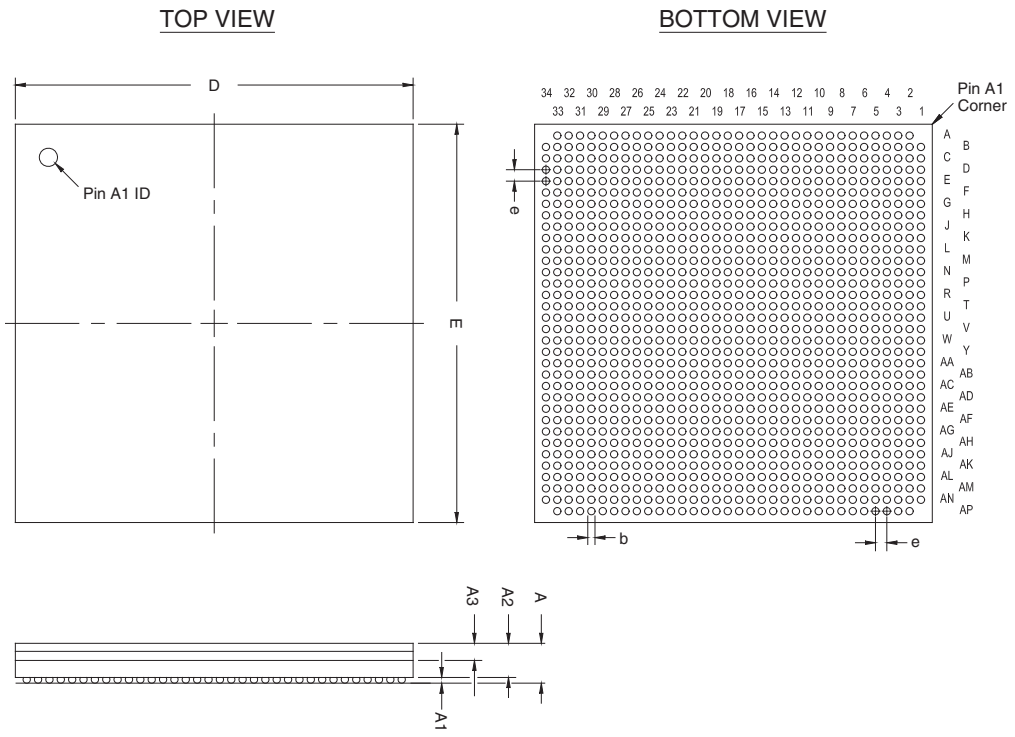

1,508-Pin FBGA - Flip Chip

- All dimensions and tolerances conform to ASME Y14.5M - 1994.
- Controlling dimension is in millimeters.
- Pin A1 may be indicated by an ID dot, or a special feature, in its proximity on package surface.

Tables 10–17 and 10–18 show the package information and package outline figure references, respectively, for the 1,508-pin FBGA packaging.

Table 10–17. 1,508-Pin FBGA Package Information

Description	Specification
Ordering code reference	F
Package acronym	FBGA
Substrate material	BT
Solder ball composition	Regular: 63Sn:37Pb (Typ.) Pb-free: Sn:3Ag:0.5Cu (Typ.)
JEDEC outline reference	MS-034 Variation: AAU-1
Maximum lead coplanarity	0.008 inches (0.20 mm)
Weight	14.6 g
Moisture sensitivity level	Printed on moisture barrier bag

Table 10–18. 1,508-Pin FBGA Package Outline Dimensions

Symbol	Millimeters		
	Min.	Nom.	Max.
A	–	–	3.50
A1	0.30	–	–
A2	0.25	–	3.00
A3	–	–	2.50
D	40.00 BSC		
E	40.00 BSC		
b	0.50	0.60	0.70
e	1.00 BSC		

Figure 10–6 shows a package outline for the 1,508-pin FineLine BGA packaging.

Figure 10–6. 1,508-Pin FBGA Package Outline

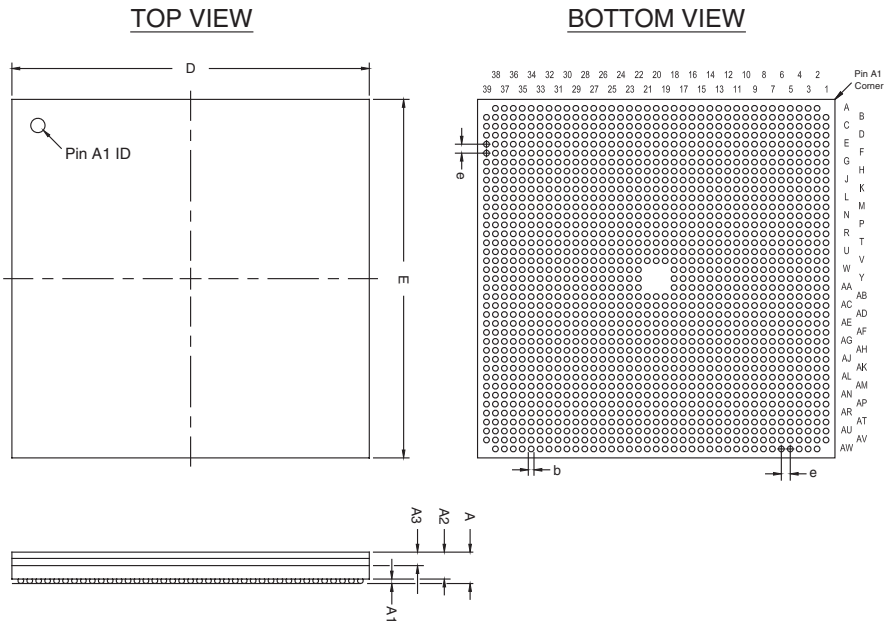

Document Revision History

Table 10–19 shows the revision history for this chapter.

Table 10–19. Document Revision History

Date and Document Version	Changes Made	Summary of Changes
No change	For the *Stratix II GX Device Handbook* only: Formerly chapter 15. The chapter number changed due to the addition of the *Stratix II GX Dynamic Reconfiguration* chapter. No content change.	—
May 2007, v4.3	Minor change to Table 10–3.	—
February 2007 v4.2	Added the "Document Revision History" section to this chapter.	—
No change	Formerly chapter 14. Chapter number change only due to chapter addition to Section I in February 2006; no content change.	—
December 2005, v4.1	Chapter updated as part of the *Stratix II Device Handbook* update.	—
October 2005 v4.0	Added chapter to the *Stratix II GX Device Handbook*.	—

11. High-Speed Board Layout Guidelines

SII52012-1.4

Introduction

Printed circuit board (PCB) layout becomes more complex as device pin density and system frequency increase. A successful high-speed board must effectively integrate devices and other elements while avoiding signal transmission problems associated with high-speed I/O standards. Because Altera® devices include a variety of high-speed features, including fast I/O pins and edge rates less than one hundred picoseconds, it is imperative that an effective design successfully:

- Reduces system noise by filtering and evenly distributing power to all devices
- Matches impedance and terminates the signal line to diminish signal reflection
- Minimizes crosstalk between parallel traces
- Reduces the effects of ground bounce

This chapter provides guidelines for effective high-speed board design using Altera devices and discusses the following issues:

- PCB material selection
- Transmission line layouts
- Routing schemes for minimizing crosstalk and maintaining signal integrity
- Termination schemes
- Simultaneous switching noise (SSN)
- Electromagnetic interference (EMI)
- Additional FPGA-specific board design/signal integrity information

PCB Material Selection

Fast edge rates contribute to noise and crosstalk, depending on the PCB dielectric construction material. Dielectric material can be assigned a dielectric constant (ε_r) that is related to the force of attraction between two opposite charges separated by a distance in a uniform medium as follows:

$$F = \frac{Q_1 Q_2}{4\pi\varepsilon r^2}$$

where:

Q_1, Q_2 = charges
r = distance between the charges (m)
F = force (N)
ε = permittivity of dielectric (F/m).

Each PCB substrate has a different relative dielectric constant. The dielectric constant is the ratio of the permittivity of a substance to that of free space, as follows:

$$\varepsilon_r = \frac{\varepsilon}{\varepsilon_O}$$

where:

ε_r = dielectric constant
ε_o = permittivity of empty space (F/m)
ε = permittivity (F/m)

The dielectric constant compares the effect of an insulator on the capacitance of a conductor pair, with the capacitance of the conductor pair in a vacuum. The dielectric constant affects the impedance of a transmission line. Signals can propagate faster in materials that have a lower dielectric constant.

A high-frequency signal that propagates through a long line on the PCB from driver to receiver is severely affected by the loss tangent of the dielectric material. A large loss tangent means higher dielectric absorption.

The most widely used dielectric material for PCBs is FR-4, a glass laminate with epoxy resin that meets a wide variety of processing conditions. The dielectric constant for FR-4 is between 4.1 and 4.5. GETEK is another material that can be used in high-speed boards. GETEK is composed of epoxy and resin (polyphenylene oxide) and has a dielectric constant between 3.6 and 4.2.

Table 11–1 shows the loss tangent value for FR-4 and GETEK materials.

Table 11–1. Loss Tangent Value of FR-4 & GETEK Materials

Manufacturer	Material	Loss Tangent Value
GE Electromaterials	GETEK	0.010 @ 1 MHz
Isola Laminate Systems	FR-4	0.019 @ 1 MHz

Transmission Line Layout

The transmission line is a trace and has a distributed mixture of resistance (R), inductance (L), and capacitance (C). There are two types of transmission line layouts, microstrip and stripline.

Figure 11–1 shows a microstrip transmission line layout, which refers to a trace routed as the top or bottom layer of a PCB and has one voltage-reference plane (power or ground). Figure 11–2 shows a stripline transmission line layout, which uses a trace routed on the inside layer of a PCB and has two voltage-reference planes (power and/or ground).

Figure 11–1. Microstrip Transmission Line Layout *Note (1)*

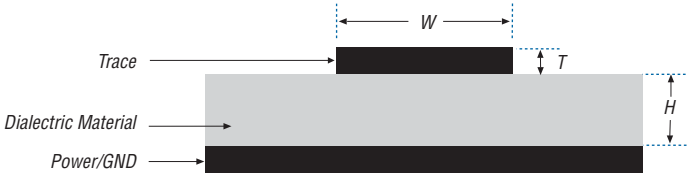

Note to Figure 11–1:
(1) *W* = width of trace, *T* = thickness of trace, and *H* = height between trace and reference plane.

Figure 11–2. Stripline Transmission Line Layout *Note (1)*

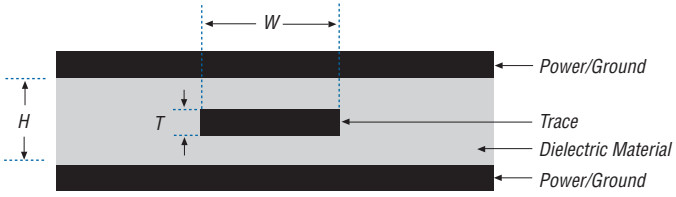

Note to Figure 11–2:
(1) *W* = width of trace, *T* = thickness of trace, and *H* = height between trace and two reference planes.

Impedance Calculation

Any circuit trace on the PCB has characteristic impedance associated with it. This impedance is dependent on the width (*W*) of the trace, the thickness (*T*) of the trace, the dielectric constant of the material used, and the height (*H*) between the trace and reference plane.

Microstrip Impedance

A circuit trace routed on an outside layer of the PCB with a reference plane (GND or V_{CC}) below it, constitutes a microstrip layout. Use the following microstrip impedance equation to calculate the impedance of a microstrip trace layout:

$$Z_0 = \frac{87}{\sqrt{\varepsilon_r + 1.41}} \ln\left(\frac{5.98 \times H}{0.8W + T}\right) \Omega$$

Using typical values of W = 8 mil, H = 5 mil, T = 1.4 mil, the dielectric constant, and (FR-4) = 4.1, with the microstrip impedance equation, solving for microstrip impedance (Z_o) yields:

$$Z_0 = \frac{87}{\sqrt{4.1 + 1.41}} \ln\left(\frac{5.98 \times (5)}{0.8(8) + 1.4}\right) \Omega$$

$$Z_0 \sim 50\ \Omega$$



The measurement unit in the microstrip impedance equation is mils (i.e., 1 mil = 0.001 inches). Also, copper (Cu) trace thickness is usually measured in ounces for example, 1 oz = 1.4 mil).

Figure 11–3 shows microstrip trace impedance with changing trace width (*W*), using the values in the microstrip impedance equation, keeping dielectric height and trace thickness constant.

Figure 11–3. Microstrip Trace Impedance with Changing Trace Width

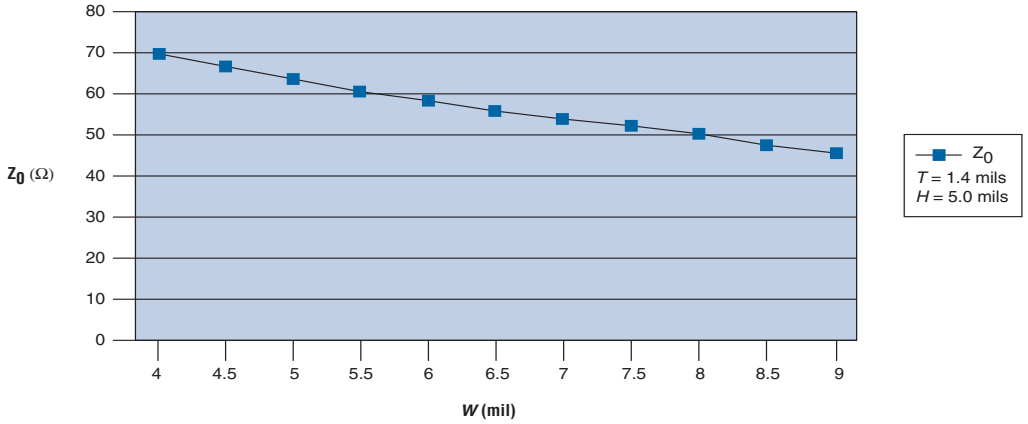

Figure 11–4 shows microstrip trace impedance with changing height, using the values in the microstrip impedance equation, keeping trace width and trace thickness constant.

Figure 11–4. Microstrip Trace Impedance with Changing Height

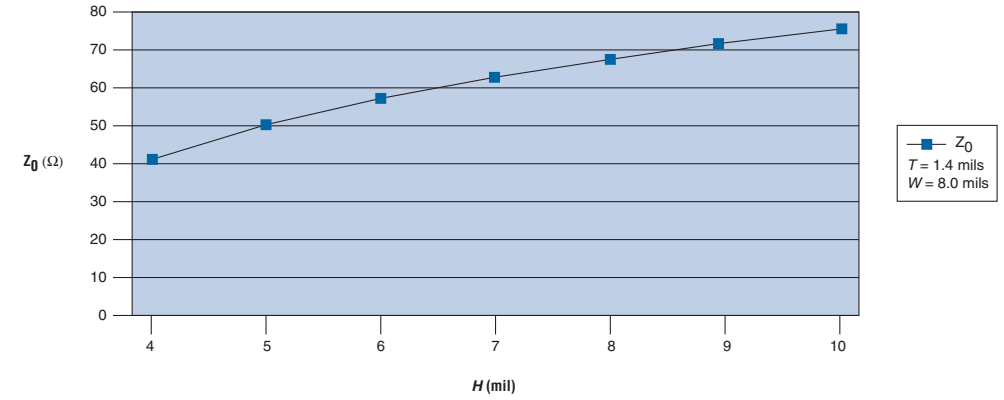

The impedance graphs show that the change in impedance is inversely proportional to trace width and directly proportional to trace height above the ground plane.

Figure 11–5 plots microstrip trace impedance with changing trace thickness using the values in the microstrip impedance equation, keeping trace width and dielectric height constant. Figure 11–5 shows that as trace thickness increases, trace impedance decreases.

Figure 11–5. Microstrip Trace Impedance with Changing Trace Thickness

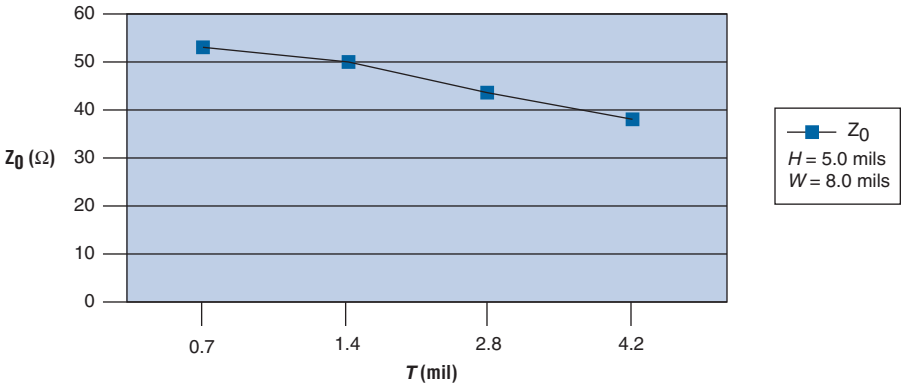

Stripline Impedance

A circuit trace routed on the inside layer of the PCB with two low-voltage reference planes (power and/or GND) constitutes a stripline layout. You can use the following stripline impedance equation to calculate the impedance of a stripline trace layout:

$$Z_o = \frac{60}{\sqrt{\varepsilon_r}} \ln\left(\frac{4H}{0.67\pi(T + 0.8W)}\right) \Omega$$

Using typical values of W = 9 mil, H = 24 mil, T = 1.4 mil, dielectric constant and (FR-4) = 4.1 with the stripline impedance equation and solving for stripline impedance (Z_o) yields:

$$Z_o = \frac{60}{\sqrt{4.1}} \ln\left(\frac{4\,(24)}{0.67\pi\,(1.4) + 0.8(9)}\right) \Omega$$

$$Z_o \sim 50\ \Omega$$

Figure 11–6 shows impedance with changing trace width using the stripline impedance equation, keeping height and thickness constant for stripline trace.

Figure 11–6. Stripline Trace Impedance with Changing Trace Width

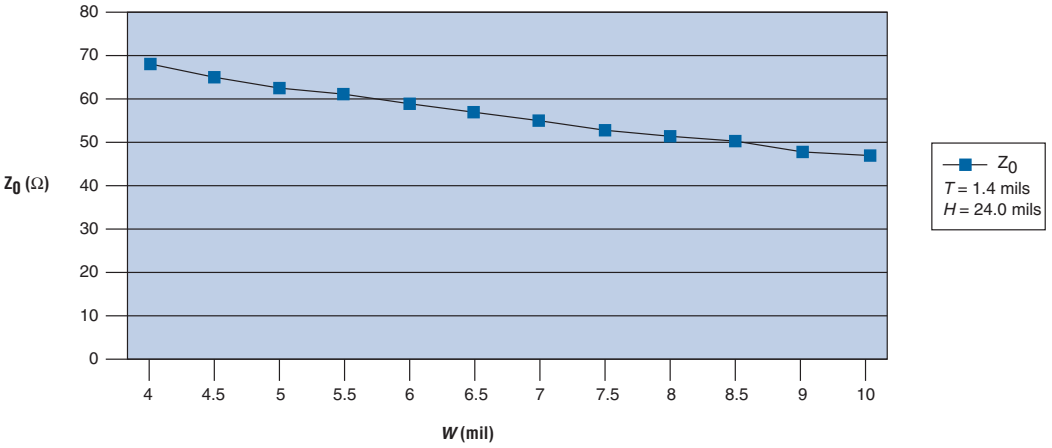

Figure 11–7 shows stripline trace impedance with changing dielectric height using the stripline impedance equation, keeping trace width and trace thickness constant.

Figure 11–7. Stripline Trace Impedance with Changing Dielectric Height

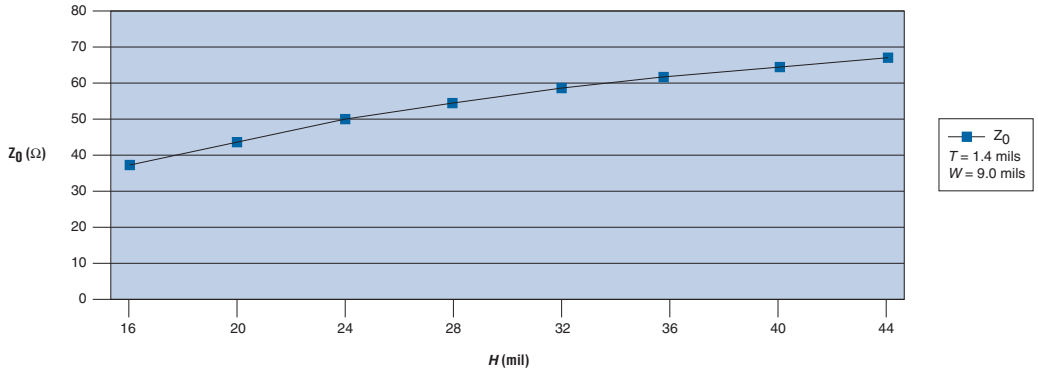

As with the microstrip layout, the stripline layout impedance also changes inversely proportional to line width and directly proportional to height. However, the rate of change with trace height above GND is much slower in a stripline layout compared with a microstrip layout. A stripline layout has a signal sandwiched by FR-4 material, whereas a microstrip layout has one conductor open to air. This exposure causes a higher effective dielectric constant in stripline layouts compared with microstrip

layouts. Thus, to achieve the same impedance, the dielectric span must be greater in stripline layouts compared with microstrip layouts. Therefore, stripline-layout PCBs with controlled impedance lines are thicker than microstrip-layout PCBs.

Figure 11–8 shows stripline trace impedance with changing trace thickness, using the stripline impedance equation, keeping trace width and dielectric height constant. Figure 11–8 shows that the characteristic impedance decreases as the trace thickness increases.

Figure 11–8. Stripline Trace Impedance with Changing Trace Thickness

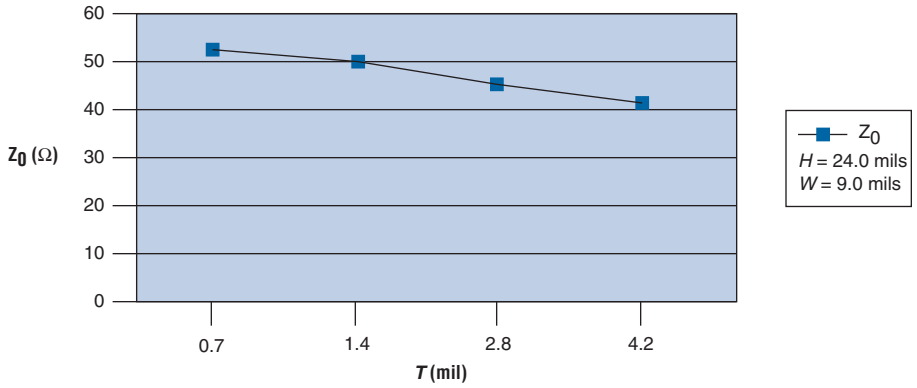

Propagation Delay

Propagation delay (t_{PD}) is the time required for a signal to travel from one point to another. Transmission line propagation delay is a function of the dielectric constant of the material.

Microstrip Layout Propagation Delay

You can use the following equation to calculate the microstrip trace layout propagation delay:

$$t_{PD}\ (\text{microstrip}) = 85\sqrt{0.475\varepsilon_r + 0.67}$$

Stripline Layout Propagation Delay

You can use the following equation to calculate the stripline trace layout propagation delay.

$$t_{PD}\ (\text{stripline}) = 85\sqrt{\varepsilon_r}$$

Figure 11–9 shows the propagation delay versus the dielectric constant for microstrip and stripline traces. As the dielectric constant increases, the propagation delay also increases.

Figure 11–9. Propagation Delay Versus Dielectric Constant for Microstrip & Stripline Traces

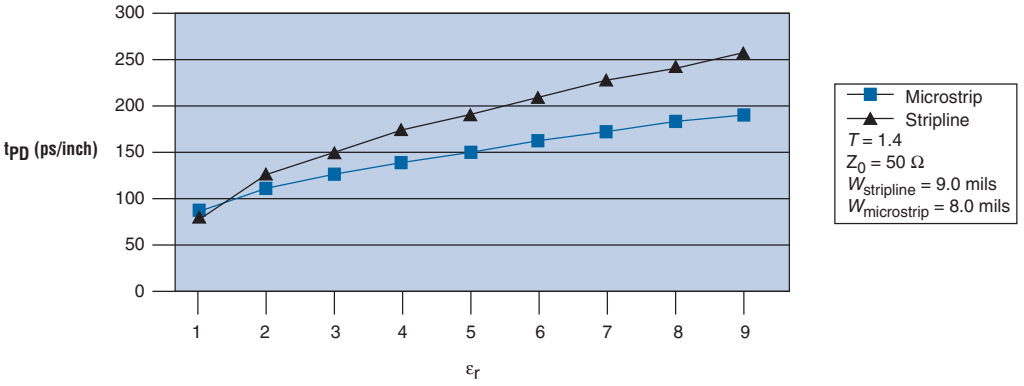

Pre-Emphasis

Typical transmission media like copper trace and coaxial cable have low-pass characteristics, so they attenuate higher frequencies more than lower frequencies. A typical digital signal that approximates a square wave contains high frequencies near the switching region and low frequencies in the constant region. When this signal travels through low-pass media, its higher frequencies are attenuated more than the lower frequencies, resulting in increased signal rise times. Consequently, the eye opening narrows and the probability of error increases.

The high-frequency content of a signal is also degraded by what is called the "skin effect." The cause of skin effect is the high-frequency current that flows primarily on the surface (skin) of a conductor. The changing current distribution causes the resistance to increase as a function of frequency.

You can use pre-emphasis to compensate for the skin effect. By Fourier analysis, a square wave signal contains an infinite number of frequencies. The high frequencies are located in the low-to-high and high-to-low transition regions and the low frequencies are located in the flat (constant) regions. Increasing the signal's amplitude near the transition region emphasizes higher frequencies more than the lower frequencies. When this pre-emphasized signal passes through low-pass media, it will come out with minimal distortion, if you apply the correct amount of pre-emphasis (see Figure 11–10).

Figure 11–10. Input & Output Signals with & without Pre-Emphasis

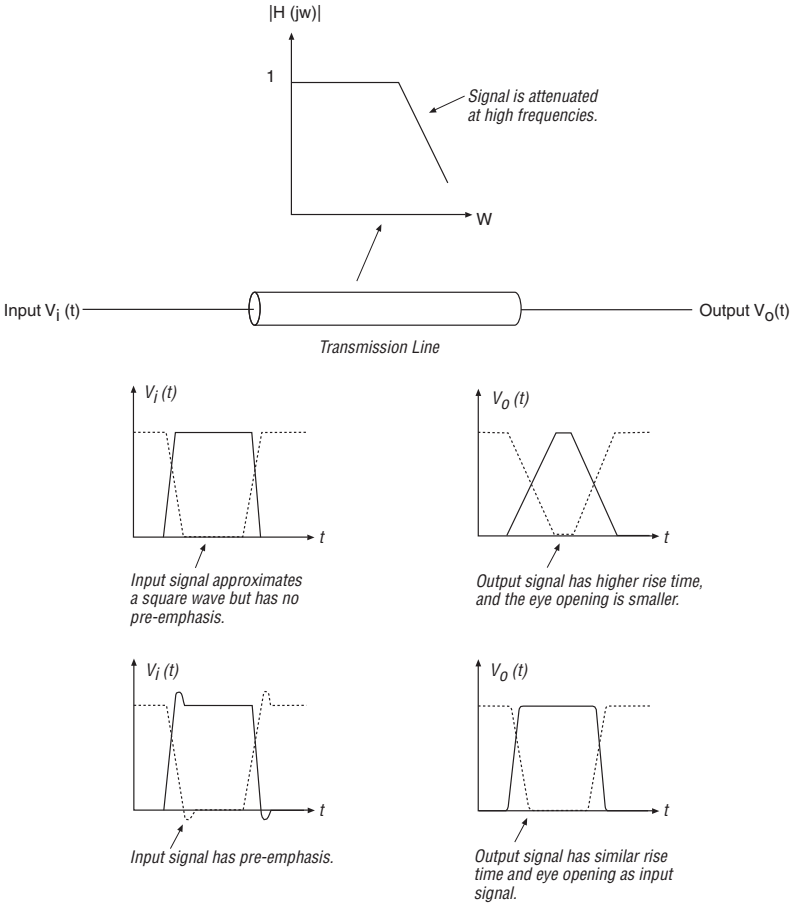

Stratix® II and Stratix GX devices provide programmable pre-emphasis to compensate for variable lengths of transmission media. You can set the pre-emphasis to between 5 and 25%, depending on the value of the output differential voltage (V_{OD}) in the Stratix GX device. Table 11–2 shows the available Stratix GX programmable pre-emphasis settings.

Table 11–2. Programmable Pre-Emphasis with Stratix GX Devices

V_{OD}	Pre-emphasis Setting (%)				
	5	10	15	20	25
400	420	440	460	480	500
480	504	528	552	576	600
600	630	660	690	720	750
800	840	880	920	960	1,000
960	1,008	1,056	1,104	1,152	1,200
1,000	1,050	1,100	1,150	1,200	1,250
1,200	1,260	1,320	1,380	1,440	1,500
1,400	1,470	1,540	-	-	-
1,440	1,512	1,584	-	-	-
1,500	1,575	-	-	-	-
1,600	-	-	-	-	-

Routing Schemes for Minimizing Crosstalk & Maintaining Signal Integrity

Crosstalk is the unwanted coupling of signals between parallel traces. Proper routing and layer stack-up through microstrip and stripline layouts can minimize crosstalk.

To reduce crosstalk in dual-stripline layouts that have two signal layers next to each other, route all traces perpendicular, increase the distance between the two signal layers, and minimize the distance between the signal layer and the adjacent reference plane (see Figure 11–11).

Figure 11–11. Dual- and Single-Stripline Layouts

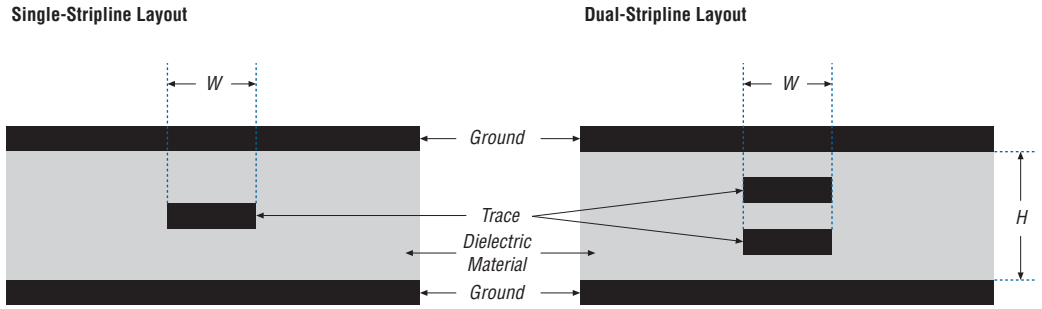

Take the following actions to reduce crosstalk in either microstrip or stripline layouts:

- Widen spacing between signal lines as much as routing restrictions will allow. Try not to bring traces closer than three times the dielectric height.
- Design the transmission line so that the conductor is as close to the ground plane as possible. This technique will couple the transmission line tightly to the ground plane and help decouple it from adjacent signals.
- Use differential routing techniques where possible, especially for critical nets (i.e., match the lengths as well as the turns that each trace goes through).
- If there is significant coupling, route single-ended signals on different layers orthogonal to each other.
- Minimize parallel run lengths between single-ended signals. Route with short parallel sections and minimize long, coupled sections between nets.

Crosstalk also increases when two or more single-ended traces run parallel and are not spaced far enough apart. The distance between the centers of two adjacent traces should be at least four times the trace width, as shown in Figure 11–12. To improve design performance, lower the distance between the trace and the ground plane to under 10 mils without changing the separation between the two traces.

Figure 11–12. Separating Traces for Crosstalk

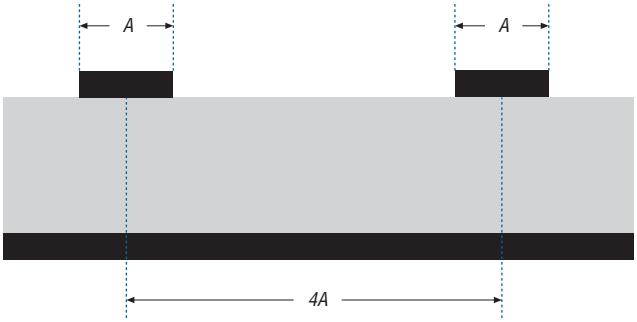

Compared with high dielectric materials, low dielectric materials help reduce the thickness between the trace and ground plane while maintaining signal integrity. Figure 11–13 plots the relationship of height versus dielectric constant using the microstrip impedance and stripline impedance equations, keeping impedance, width, and thickness constant.

Figure 11–13. Height Versus Dielectric Constant

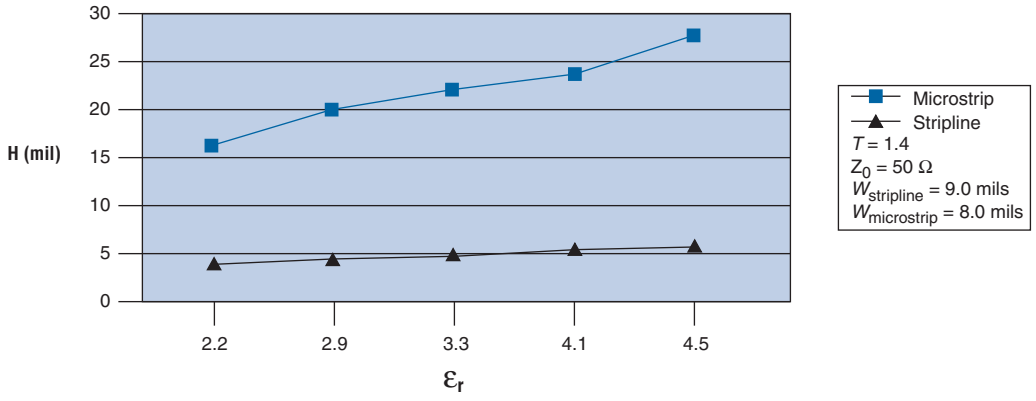

Signal Trace Routing

Proper routing helps to maintain signal integrity. To route a clean trace, you should perform simulation with good signal integrity tools. The following section describes the two different types of signal traces available for routing, single-ended traces, and differential pair traces.

Single-Ended Trace Routing

A single-ended trace connects the source and the load/receiver. Single-ended traces are used in general point-to-point routing, clock routing, low-speed, and non-critical I/O routing. This section discusses different routing schemes for clock signals. You can use the following types of routing to drive multiple devices with the same clock:

- Daisy chain routing
  - With stub
  - Without stub
- Star routing
- Serpentine routing

Use the following guidelines to improve the clock transmission line's signal integrity:

- Keep clock traces as straight as possible. Use arc-shaped traces instead of right-angle bends.
- Do not use multiple signal layers for clock signals.
- Do not use vias in clock transmission lines. Vias can cause impedance change and reflection.
- Place a ground plane next to the outer layer to minimize noise. If you use an inner layer to route the clock trace, sandwich the layer between reference planes.
- Terminate clock signals to minimize reflection.
- Use point-to-point clock traces as much as possible.

Daisy Chain Routing With Stubs

Daisy chain routing is a common practice in designing PCBs. One disadvantage of daisy chain routing is that stubs, or short traces, are usually necessary to connect devices to the main bus (see Figure 11–14). If a stub is too long, it will induce transmission line reflections and degrade signal quality. Therefore, the stub length should not exceed the following conditions:

$$TD_{stub} < (T_{10\% \text{ to } 90\%})/3$$

where TD_{stub} = Electrical delay of the stub

$T_{10\% \text{ to } 90\%}$ = Rise or fall time of signal edge

For a 1-ns rise-time edge, the stub length should be less than 0.5 inches (see the "References" section). If your design uses multiple devices, all stub lengths should be equal to minimize clock skew.

If possible, you should avoid using stubs in your PCB design. For high-speed designs, even very short stubs can create signal integrity problems.

Figure 11–14. Daisy Chain Routing with Stubs

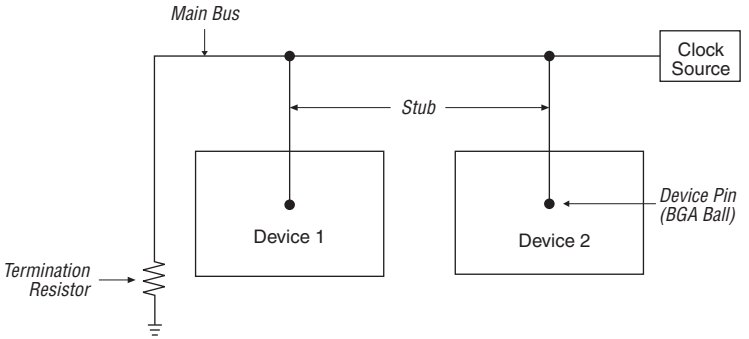

Figures 11–15 through 11–17 show the SPICE simulation with different stub length. As the stub length decreases, there is less reflection noise, which causes the eye opening to increase.

Figure 11–15. Stub Length = 0.5 Inch

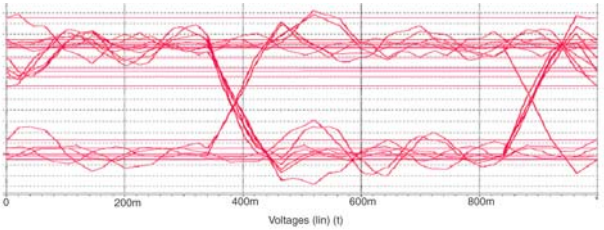

Figure 11–16. Stub Length = 0.25 Inch

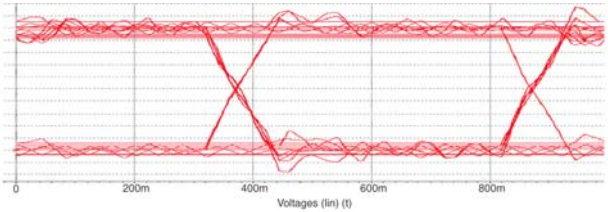

Figure 11–17. Stub Length = Zero Inches

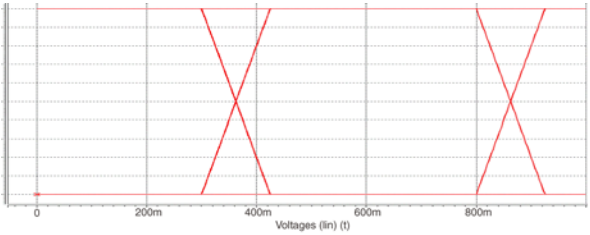

Daisy Chain Routing without Stubs

Figure 11–18 shows daisy chain routing with the main bus running through the device pins, eliminating stubs. This layout removes the risk of impedance mismatch between the main bus and the stubs, minimizing signal integrity problems.

Figure 11–18. Daisy Chain Routing without Stubs

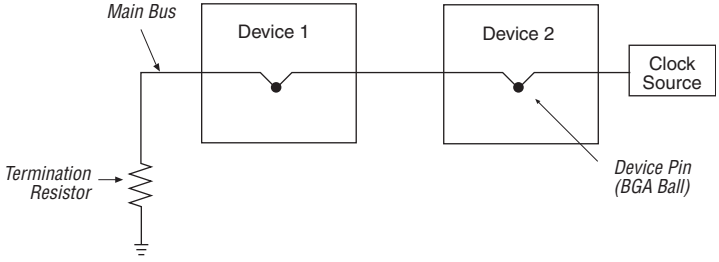

Star Routing

In star routing, the clock signal travels to all the devices at the same time (see Figure 11–19). Therefore, all trace lengths between the clock source and devices must be matched to minimize the clock skew. Each load should be identical to minimize signal integrity problems. In star routing, you must match the impedance of the main bus with the impedance of the long trace that connects to multiple devices.

Figure 11–19. Star Routing

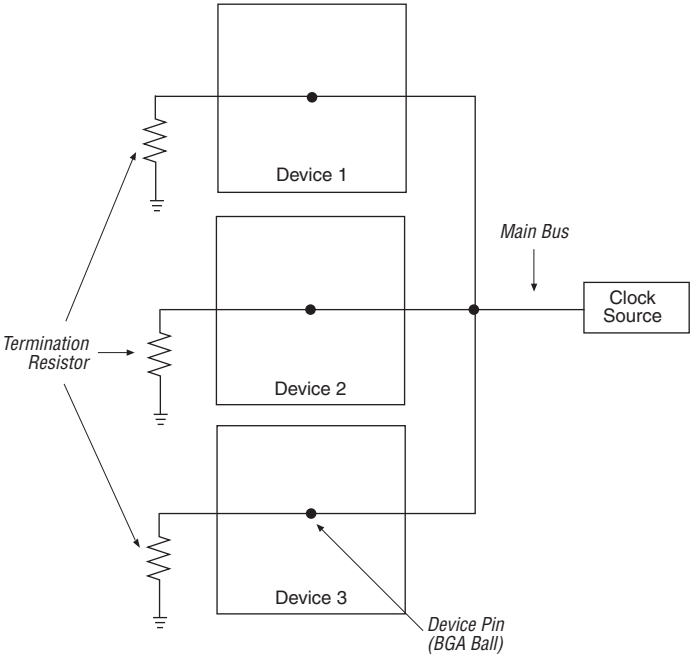

Serpentine Routing

When a design requires equal-length traces between the source and multiple loads, you can bend some traces to match trace lengths (see Figure 11–20). However, improper trace bending affects signal integrity and propagation delay. To minimize crosstalk, ensure that $S \geq 3 \times H$, where S is the spacing between the parallel sections and H is the height of the signal trace above the reference ground plane (see Figure 11–21).

Figure 11–20. Serpentine Routing

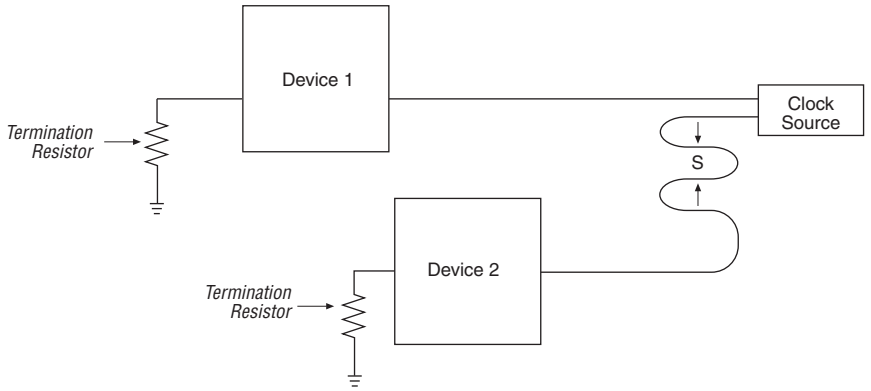

Altera recommends avoiding serpentine routing, if possible. Instead, use arcs to create equal-length traces.

Differential Trace Routing

To maximize signal integrity, proper routing techniques for differential signals are important for high-speed designs. Figure 11–21 shows two differential pairs using the microstrip layout.

Figure 11–21. Differential Trace Routing *Note (1)*

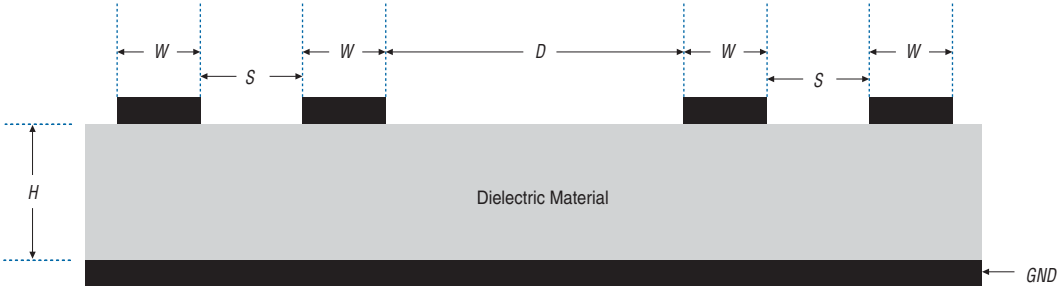

Note to Figure 11–21:

(1) *D* = distance between two differential pair signals; *W* = width of a trace in a differential pair; *S* = distance between the trace in a differential pair; and *H* = dielectric height above the group plane.

Use the following guidelines when using two differential pairs:

- Keep the distance between the differential traces (*S*) constant over the entire trace length.

- Ensure that $D > 2S$ to minimize the crosstalk between the two differential pairs.
- Place the differential traces $S = 3H$ as they leave the device to minimize reflection noise.
- Keep the length of the two differential traces the same to minimize the skew and phase difference.
- Avoid using multiple vias because they can cause impedance mismatch and inductance.

Termination Schemes

Mismatched impedance causes signals to reflect back and forth along the lines, which causes ringing at the load receiver. The ringing reduces the dynamic range of the receiver and can cause false triggering. To eliminate reflections, the impedance of the source (Z_S) must equal the impedance of the trace (Z_o), as well as the impedance of the load (Z_L). This section discusses the following signal termination schemes:

- Simple parallel termination
- Thevenin parallel termination
- Active parallel termination
- Series-RC parallel termination
- Series termination
- Differential pair termination

Simple Parallel Termination

In a simple parallel termination scheme, the termination resistor (R_T) is equal to the line impedance. Place the R_T as close to the load as possible to be efficient (see Figure 11–22).

Figure 11–22. Simple Parallel Termination

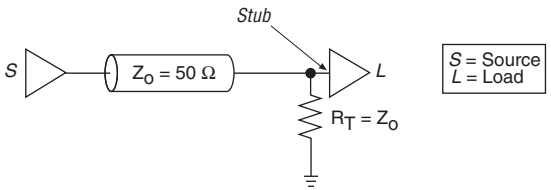

The stub length from the R_T to the receiver pin and pads should be as small as possible. A long stub length causes reflections from the receiver pads, resulting in signal degradation. If your design requires a long termination line between the terminator and receiver, the placement of the resistor becomes important. For long termination line lengths, use fly-by termination (see Figure 11–23).

Figure 11–23. Simple Parallel Fly-By Termination

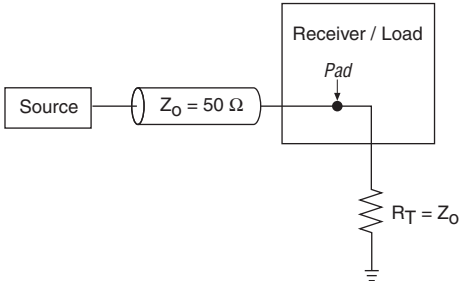

Thevenin Parallel Termination

An alternative parallel termination scheme uses a Thevenin voltage divider (see Figure 11–24). The R_T is split between R_1 and R_2, which equals the line impedance when combined.

Figure 11–24. Thevenin Parallel Termination

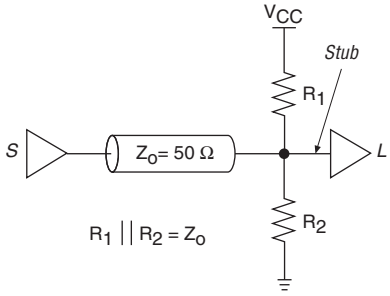

As noted in the previous section, stub length is dependent on signal rise and fall time and should be kept to a minimum. If your design requires a long termination line between the terminator and receiver, use fly-by termination or Thevenin fly-by termination (see Figures 11–23 and 11–25).

Figure 11–25. Thevenin Parallel Fly-By Termination

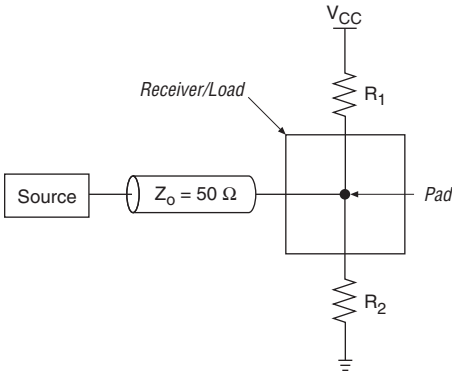

Active Parallel Termination

Figure 11–26 shows an active parallel termination scheme, where the terminating resistor ($R_T = Z_o$) is tied to a bias voltage (V_{BIAS}). In this scheme, the voltage is selected so that the output drivers can draw current from the high- and low-level signals. However, this scheme requires a separate voltage source that can sink and source currents to match the output transfer rates.

Figure 11–26. Active Parallel Termination

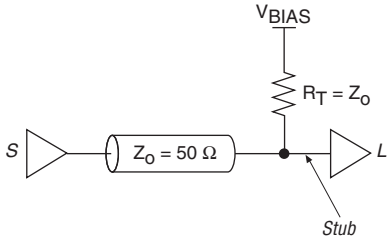

Figure 11–27 shows the active parallel fly-by termination scheme.

Figure 11–27. Active Parallel Fly-By Termination

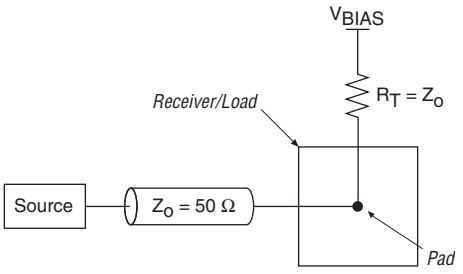

Series-RC Parallel Termination

A series-RC parallel termination scheme uses a resistor and capacitor (series-RC) network as the terminating impedance. R_T is equal to Z_0. The capacitor must be large enough to filter the constant flow of DC current. For data patterns with long strings of 1 or 0, this termination scheme may delay the signal beyond the design thresholds, depending on the size of the capacitor.

Capacitors smaller than 100 pF diminish the effectiveness of termination. The capacitor blocks low-frequency signals while passing high-frequency signals. Therefore, the DC loading effect of R_T does not have an impact on the driver, as there is no DC path to ground. The series-RC termination scheme requires balanced DC signaling, the signals spend half the time on and half the time off. AC termination is typically used if there is more than one load (see Figure 11–28).

Figure 11–28. Series-RC Parallel Termination

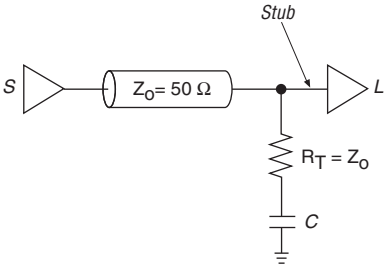

Figure 11–29 shows series-RC parallel fly-by termination.

Figure 11–29. Series-RC Parallel Fly-By Termination

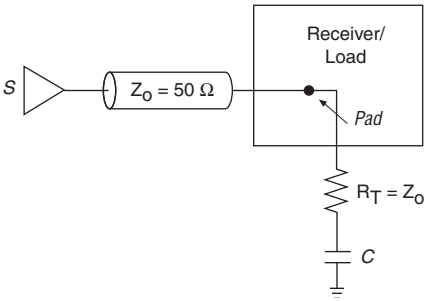

Series Termination

In a series termination scheme, the resistor matches the impedance at the signal source instead of matching the impedance at each load (see Figure 11–30). Stratix II devices have programmable output impedance. You can choose output impedance to match the line impedance without adding an external series resistor. The sum of R_T and the impedance of the output driver should be equal to Z_0. Because Altera device output impedance is low, you should add a series resistor to match the signal source to the line impedance. The advantage of series termination is that it consumes little power. However, the disadvantage is that the rise time degrades because of the increased RC time constant. Therefore, for high-speed designs, you should perform the pre-layout signal integrity simulation with Altera I/O buffer information specification (IBIS) models before using the series termination scheme.

Figure 11–30. Series Termination

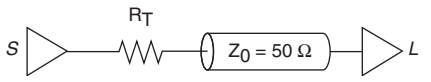

Differential Pair Termination

Differential signal I/O standards require an R_T between the signals at the receiving device (see Figure 11–31). For the low-voltage differential signal (LVDS) and low-voltage positive emitter-coupled logic (LVPECL) standard, the R_T should match the differential load impedance of the bus (typically 100 Ω).

Figure 11–31. Differential Pair (LVDS & LVPECL) Termination

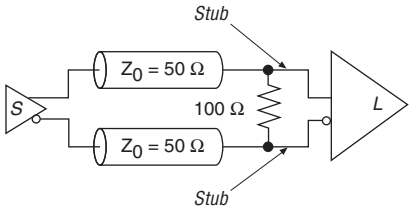

Figure 11–32 shows the differential pair fly-by termination scheme for the LVDS and LVPECL standard.

Figure 11–32. Differential Pair (LVDS & LVPECL) Fly-By Termination

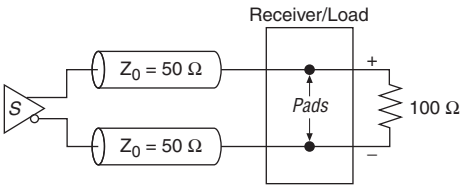

See the *Board Design Guidelines for LVDS Systems* White Paper for more information on terminating differential signals.

Simultaneous Switching Noise

As digital devices become faster, their output switching times decrease. This causes higher transient currents in outputs as the devices discharge load capacitances. These higher transient currents result in a board-level phenomenon known as ground bounce.

Because many factors contribute to ground bounce, you cannot use a standard test method to predict its magnitude for all possible PCB environments. You can only test the device under a given set of conditions to determine the relative contributions of each condition and of the device itself. Load capacitance, socket inductance, and the number of switching outputs are the predominant factors that influence the magnitude of ground bounce in FPGAs.

Altera requires 0.01- to 0.1-µF surface-mount capacitors in parallel to reduce ground bounce. Add an additional 0.001-µF capacitor in parallel to these capacitors to filter high-frequency noise (>100 MHz). You can also add 0.0047-µF and 0.047-µF capacitors.

Altera recommends that you take the following action to reduce ground bounce and V_{CC} sag:

- Configure unused I/O pins as output pins, and drive the output low to reduce ground bounce. This configuration will act as a virtual ground. Connect the output pin to GND on your board.
- Configure the unused I/O pins as output, and drive high to prevent V_{CC} sag. Connect the output pin to V_{CCIO} of that I/O bank.
- Create a programmable ground or V_{CC} next to switching pins.
- Reduce the number of outputs that can switch simultaneously and distribute them evenly throughout the device.
- Manually assign ground pins in between I/O pins. (Separating I/O pins with ground pins prevents ground bounce.)
- Set the programmable drive strength feature with a weaker drive strength setting to slow down the edge rate.
- Eliminate sockets whenever possible. Sockets have inductance associated with them.
- Depending on the problem, move switching outputs close to either a package ground or VCC pin. Eliminate pull-up resistors, or use pull-down resistors.
- Use multi-layer PCBs that provide separate V_{CC} and ground planes to utilize the intrinsic capacitance of the V_{CC} /GND plane.
- Create synchronous designs that are not affected by momentarily switching pins.
- Add the recommended decoupling capacitors to V_{CC}/GND pairs.
- Place the decoupling capacitors as close as possible to the power and ground pins of the device.
- Connect the capacitor pad to the power and ground plane with larger vias to minimize the inductance in decoupling capacitors and allow for maximum current flow.
- Use wide, short traces between the vias and capacitor pads, or place the via adjacent to the capacitor pad (see Figure 11–33).

Figure 11–33. Suggested Via Location that Connects to Capacitor Pad

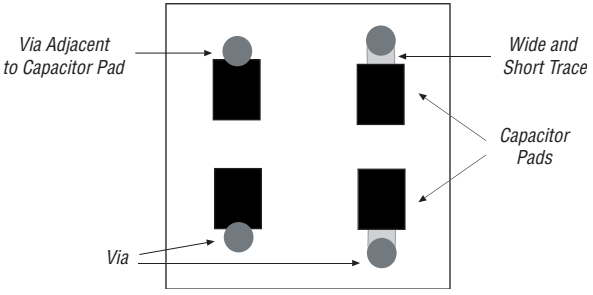

- Traces stretching from power pins to a power plane (or island, or a decoupling capacitor) should be as wide and as short as possible. This reduces series inductance, thereby reducing transient voltage drops from the power plane to the power pin which, in turn, decreases the possibility of ground bounce.
- Use surface-mount low effective series resistance (ESR) capacitors to minimize the lead inductance. The capacitors should have an ESR value as small as possible.
- Connect each ground pin or via to the ground plane individually. A daisy chain connection to the ground pins shares the ground path, which increases the return current loop and thus inductance.

Power Filtering & Distribution

You can reduce system noise by providing clean, evenly distributed power to V_{CC} on all boards and devices. This section describes techniques for distributing and filtering power.

Filtering Noise

To decrease the low-frequency (< 1 kHz) noise caused by the power supply, filter the noise on power lines at the point where the power connects to the PCB and to each device. Place a 100-µF electrolytic capacitor where the power supply lines enter the PCB. If you use a voltage regulator, place the capacitor immediately after the pin that provides the VCC signal to the device(s). Capacitors not only filter low-frequency noise from the power supply, but also supply extra current when many outputs switch simultaneously in a circuit.

To filter power supply noise, use a non-resonant, surface-mount ferrite bead large enough to handle the current in series with the power supply. Place a 10- to 100-µF bypass capacitor next to the ferrite bead (see Figure 11–34). (If proper termination, layout, and filtering eliminate enough noise, you do not need to use a ferrite bead.) The ferrite bead acts as a short for high-frequency noise coming from the V_{CC} source. Any low-frequency noise is filtered by a large 10-µF capacitor after the ferrite bead.

Figure 11–34. Filtering Noise with a Ferrite Bead

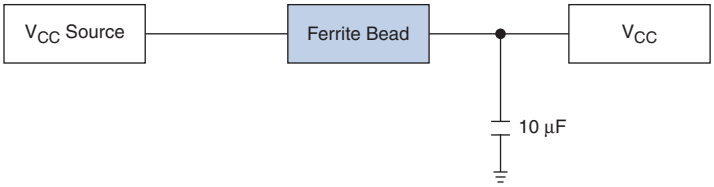

Usually, elements on the PCB add high-frequency noise to the power plane. To filter the high-frequency noise at the device, place decoupling capacitors as close as possible to each V_{CC} and GND pair.

See the *Operating Requirements for Altera Devices* Data Sheet for more information on bypass capacitors.

Power Distribution

A system can distribute power throughout the PCB with either power planes or a power bus network.

You can use power planes on multi-layer PCBs that consist of two or more metal layers that carry V_{CC} and GND to the devices. Because the power plane covers the full area of the PCB, its DC resistance is very low. The power plane maintains V_{CC} and distributes it equally to all devices while providing very high current-sink capability, noise protection, and shielding for the logic signals on the PCB. Altera recommends using power planes to distribute power.

The power bus network—which consists of two or more wide-metal traces that carry V_{CC} and GND to devices—is often used on two-layer PCBs and is less expensive than power planes. When designing with power bus networks, be sure to keep the trace widths as wide as possible. The main drawback to using power bus networks is significant DC resistance.

Altera recommends using separate analog and digital power planes. For fully digital systems that do not already have a separate analog power plane, it can be expensive to add new power planes. However, you can create partitioned islands (split planes). Figure 11–35 shows an example board layout with phase-locked loop (PLL) ground islands.

Figure 11–35. Board Layout for General-Purpose PLL Ground Islands

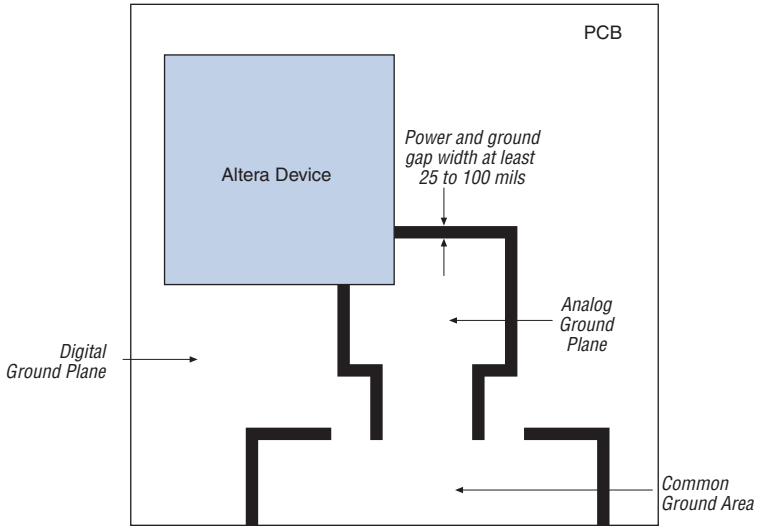

If your system shares the same plane between analog and digital power supplies, there may be unwanted interaction between the two circuit types. The following suggestions will reduce noise:

- For equal power distribution, use separate power planes for the analog (PLL) power supply. Avoid using trace or multiple signal layers to route the PLL power supply.
- Use a ground plane next to the PLL power supply plane to reduce power-generated noise.
- Place analog and digital components only over their respective ground planes.
- Use ferrite beads to isolate the PLL power supply from digital power supply.

Electromagnetic Interference (EMI)

Electromagnetic interference (EMI) is directly proportional to the change in current or voltage with respect to time. EMI is also directly proportional to the series inductance of the circuit. Every PCB generates EMI. Precautions such as minimizing crosstalk, proper grounding, and proper layer stack-up significantly reduce EMI problems.

Place each signal layer in between the ground plane and power (or ground) plane. Inductance is directly proportional to the distance an electric charge has to cover from the source of an electric charge to ground. As the distance gets shorter, the inductance becomes smaller.

Therefore, placing ground planes close to a signal source reduces inductance and helps contain EMI. Figure 11–36 shows an example of an eight-layer stack-up. In the stack-up, the stripline signal layers are the quietest because they are centered by power and GND planes. A solid ground plane next to the power plane creates a set of low ESR capacitors. With integrated circuit edge rates becoming faster and faster, these techniques help to contain EMI.

Figure 11–36. Example Eight-Layer Stack-Up

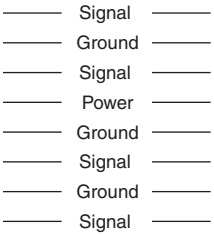

Component selection and proper placement on the board is important to controlling EMI.

The following guidelines can reduce EMI:

- Select low-inductance components, such as surface mount capacitors with low ESR, and effective series inductance.
- Use proper grounding for the shortest current return path.
- Use solid ground planes next to power planes.
- In unavoidable circumstances, use respective ground planes next to each segmented power plane for analog and digital circuits.

Additional FPGA-Specific Information

This section provides the following additional information recommended by Altera for board design and signal integrity: FPGA-specific configuration, Joint Test Action Group (JTAG) testing, and permanent test points.

Configuration

The DCLK signal is used in configuration devices and passive serial (PS) and passive parallel synchronous (PPS) configuration schemes. This signal drives edge-triggered pins in Altera devices. Therefore, any overshoot, undershoot, ringing, crosstalk, or other noise can affect configuration. Use the same guidelines for designing clock signals to

route the DCLK trace (see the "Signal Trace Routing"section). If your design uses more than five configuration devices, Altera recommends using buffers to split the fan-out on the DCLK signal.

JTAG

As PCBs become more complex, testing becomes increasingly important. Advances in surface mount packaging and PCB manufacturing have resulted in smaller boards, making traditional test methods such as external test probes and "bed-of-nails" test fixtures harder to implement. As a result, cost savings from PCB space reductions can be offset by cost increases in traditional testing methods.

In addition to boundary scan testing (BST), you can use the IEEE Std. 1149.1 controller for in-system programming. JTAG consists of four required pins, test data input (TDI), test data output (TDO), test mode select (TMS), and test clock input (TCK) as well as an optional test reset input (TRST) pin.

Use the same guidelines for laying out clock signals to route TCK traces. Use multiple devices for long JTAG scan chains. Minimize the JTAG scan chain trace length that connects one device's TDO pins to another device's TDI pins to reduce delay.



See *Application Note 39: IEEE 1149.1 (JTAG) Boundary-Scan Testing in Altera Devices* for additional details on BST.

Test Point

As device package pin density increases, it becomes more difficult to attach an oscilloscope or a logic analyzer probe on the device pin. Using a physical probe directly on to the device pin can damage the device. If the ball grid array (BGA) or FineLine BGA® package is mounted on top of the board, it is difficult to probe the other side of the board. Therefore, the PCB must have a permanent test point to probe. The test point can be a via that connects to the signal under test with a very short stub. However, placing a via on a trace for a signal under test can cause reflection and poor signal integrity.

Summary

You must carefully plan out a successful high-speed PCB. Factors such as noise generation, signal reflection, crosstalk, and ground bounce can interfere with a signal, especially with the high speeds that Altera devices transmit and receive. The signal routing, termination schemes, and power distribution techniques discussed in this chapter contribute to a more effectively designed PCB using high-speed Altera devices.

References

Johnson, H. W., and Graham, M., *"High-Speed Digital Design."* Prentice Hall, 1993.

Hall, S. H., Hall, G. W., and McCall J. A., *"High-Speed Digital System Design."* John Wiley & Sons, Inc. 2000.

Document Revision History

Table 11–3 shows the revision history for this chapter.

Table 11–3. Document Revision History

Date and Document Version	Changes Made	Summary of Changes
May 2007, v1.4	Updated "Simultaneous Switching Noise" section.	—
	Moved the Document Revision History section to the end of the chapter.	—
December 2005, v1.3	Minor content update.	—
March 2005, v1.2	Minor content updates.	—
January 2005, v1.1	This chapter was formally chapter 12.	—
February 2004, v1.0	Added document to the Stratix II Device Handbook.	—