SERIES: EMMA 30W | **DESCRIPTION:** MEDICAL AC-DC POWER SUPPLY

FEATURES
- up to 30 W power
- universal input (90~264 Vac)
- interchangeable AC blades
- single regulated output from 5~24V
- over voltage and short circuit protections
- full medical safety approvals
- level V efficiency



RoHS c UL us FC CE IEC 60601-1 EN 60601-1

MODEL	output voltage (Vdc)	output current max (A)	output power max (W)	ripple and noise[1] max (mVp-p)	efficiency level
EMMA050400	5	4	20	50	V
EMMA090300	9	3	27	90	V
EMMA120250	12	2.5	30	120	V
EMMA150200	15	2	30	150	V
EMMA180167	18	1.67	30	180	V
EMMA240125	24	1.25	30	240	V

1. at full load, 100 ~ 240 Vac input, 20 MHz bandwidth oscilloscope, each output terminated with a 10 µF aluminum electrolytic and 0.1 µF ceramic capacitors.

PART NUMBER KEY

EMMA120250 X - XX - IC - CXX

- Base Number: example of 12 Vdc, 2.5 A
- Blades:
  - "blank" = North American, European, United Kingdom, Australian
  - N = North American blade included
  - E = European blade included
  - B = United Kingdom blade included
  - A = Australian blade included
  - K = No blades included
- DC Plug Type
- Factory Designation
- Reserved for Custom Configurations

INPUT

parameter	conditions/description	min	typ	max	units
voltage		90		264	Vac
frequency		47		63	Hz
input current				0.8	A
inrush current	at 240 V ac, cold start			100	A
no load power consumption				0.3	W

OUTPUT

parameter	conditions/description	min	typ	max	units
line regulation[1]			±1		%
load regulation[2]	5 V output 9 V output all other outputs		±6 ±3 ±2		% % %
voltage accuracy			±2		%
hold-up time	at 115 Vac		10		ms
switching frequency			70		kHz
temperature coefficient			±0.05		%/°C

Note: 1. measured from 100 ~ 240 Vac, full load
2. measured from 60% to full load and from 60 ~ 20% load (60% ±40% load)

PROTECTIONS

parameter	conditions/description
over voltage protection	TVS component to clamp
short circuit protection	continuous, auto restart

SAFETY & COMPLIANCE

parameter	conditions/description	min	typ	max	units
isolation voltage	input to output			5,656	Vdc
safety approvals	IEC 60601-1, EN 60601-1, UL 60601-1				
EMI/EMC	EN 55011 Class B, FCC CRF47 Part 18 Class B, EN 60601-1-2, EN 61000-3-(2,3), IEC 61000-4-(2,4,5,6,8,11)				
leakage current				0.1	mA
MTBF	at 25°C, 115 Vac, per MIL-HDBK-217F	200,000			hours
RoHS compliant	yes				

ENVIRONMENTAL

parameter	conditions/description	min	typ	max	units
operating temperature		0		40	°C
storage temperature		-20		85	°C
humidity	non-condensing			93	%

MECHANICAL

parameter	conditions/description	min	typ	max	units
dimensions	108.7 x 62.0 x 36.7 mm				
weight			300		g

MECHANICAL

parameter	conditions/description	min	typ	max	units
dimensions	4.278 x 2.440 x 1.445 (108.67 x 61.98 x 36.70 mm)				inch
input plug	multi-blade (US, UK, Europe, Australia, China)				

MECHANICAL DRAWING

units: mm [inches]
tolerance: ±0.5 [±0.02]

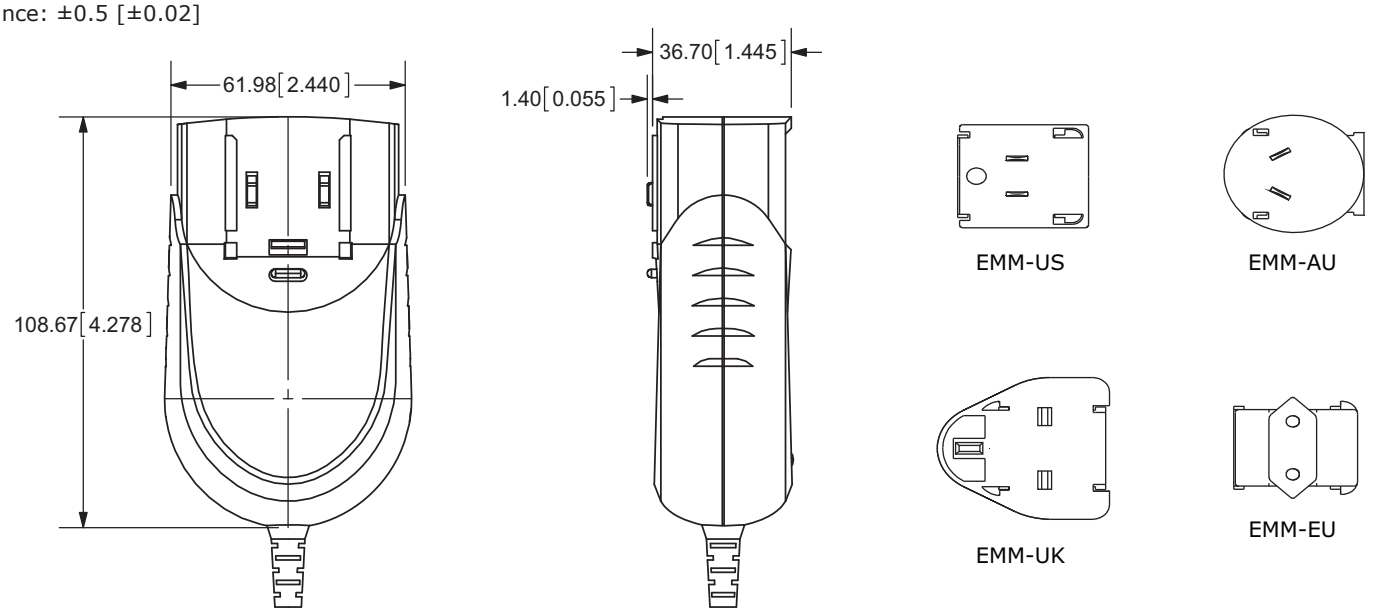

DC CORD

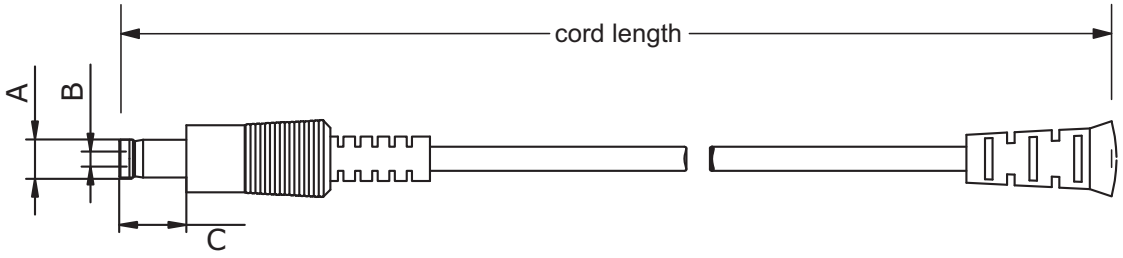

	A	B	C	Unit
P5/P5R	5.5	2.1	9.5	mm
P6/P6R	5.5	2.5	9.5	mm

MODEL NO.	CABLE GAUGE	CORD LENGTH
EMMA050040	18 AWG	1,220 mm ±50
EMMA090300	18 AWG	1,220 mm ±50
EMMA120250	18 AWG	1,800 mm ±50
EMMA150200	18 AWG	1,800 mm ±50
EMMA180167	18 AWG	1,800 mm ±50
EMMA240125	18 AWG	1,800 mm ±50

REVISION HISTORY

rev.	description	date
1.0	initial release	12/16/2011
1.01	updated P7/P7R B dimension	03/23/2012
1.02	V-Infinity branding removed	08/21/2012

The revision history provided is for informational purposes only and is believed to be accurate.

CUI INC®

Headquarters
20050 SW 112th Ave.
Tualatin, OR 97062
800.275.4899

Fax 503.612.2383
cui.com
techsupport@cui.com

This device complies with part 15 of the FCC Rules. Operation is subject to the following two conditions:
(1) This device may not cause harmful interference, and
(2) this device must accept any interference received, including interference that may cause undesired operation.

CUI offers a one (1) year limited warranty. Complete warranty information is listed on our website.

CUI reserves the right to make changes to the product at any time without notice. Information provided by CUI is believed to be accurate and reliable. However, no responsibility is assumed by CUI for its use, nor for any infringements of patents or other rights of third parties which may result from its use.

CUI products are not authorized or warranted for use as critical components in equipment that requires an extremely high level of reliability. A critical component is any component of a life support device or system whose failure to perform can be reasonably expected to cause the failure of the life support device or system, or to affect its safety or effectiveness.