EMD-SL-C-OC-10



Electronic monitoring relay for overcurrent monitoring of direct and alternating current in single-phase networks

INTERFACE

Data sheet
101745_en_04

© PHOENIX CONTACT - 09/2009

1 Description

Increasingly higher demands are being placed on safety and system availability – across all sectors. Processes are becoming more and more complex, not only in mechanical engineering and the chemical industry, but also in plant and automation technology. Demands on power engineering are also increasing constantly.

Error-free and therefore cost-effective operation can only be achieved through continuous monitoring of important network and system parameters. Electronic monitoring relays in the EMD series are available for a wide range of monitoring tasks to avoid the consequences of errors or to keep them within limits.

The operating states are indicated using colored LEDs, errors that may occur can be sent to a control system via a floating contact or can shut down a part of the system. Some device versions are equipped with startup and response delays in order to briefly tolerate measured values outside the set monitoring range.

Features

- Overcurrent monitoring
- Adjustable threshold values
- Adjustable hysteresis
- Adjustable response delay
- Power supply via power module can be selected

WARNING: Risk of electric shock
Never carry out work when voltage is present.

Make sure you always use the latest documentation.
It can be downloaded at www.phoenixcontact.net/download.

2 Ordering data

Description	Type	Order No.	Pcs. / Pkt.
Electronic monitoring relay for overcurrent monitoring of direct and alternating current in single-phase networks	EMD-SL-C-OC-10	2866019	1

Accessories	Type	Order No.	Pcs. / Pkt.
Power modules, pluggable, for EMD-SL-..., supply voltage: 20 V DC ... 30 V DC	EMD-SL-PS- 24DC	2885359	1
Power modules, pluggable, for EMD-SL-..., supply voltage: 20.2...26.4 V AC	EMD-SL-PS- 24AC	2866103	1
Power modules, pluggable, for EMD-SL-..., supply voltage: 88...121 V AC	EMD-SL-PS-110AC	2866116	1
Power modules, pluggable, for EMD-SL-..., supply voltage: 108 V AC ... 132 V AC	EMD-SL-PS-120AC	2885731	1
Power modules, pluggable, for EMD-SL-..., supply voltage: 195...264 V AC	EMD-SL-PS-230AC	2866129	1

3 Technical data

Input data	
Input name	Measuring input
Measured value	DC, AC sine
Input current range	0 mA ... 100 mA AC/DC (Connection terminals: I1 and GND) 0 A ... 1 A AC/DC (Connection terminals: I2 and GND) 0 A ... 10 A AC/DC (Connection terminals: I3 and GND)
Overload capacity	800 mA (at I_N = 100 mA) 3 A (at I_N = 1 A) 12 A (at I_N = 10 A)
Input resistance current input	470 mΩ (at I_N = 100 mA) 47 mΩ (at I_N = 1 A) 5 mΩ (at I_N = 10 A)
Maximum temperature coefficient	< 0.1 %/K
Setting range for response delay	0.2 s ... 10 s
Min. setting range	5 % ... 95 % (From I_N)
Max. setting range	10 % ... 100 % (From I_N)
Function	Overcurrent
Basic accuracy	± 5 % (of scale end value)
Setting accuracy	≤ 5 % (of scale end value)
Repeat accuracy	≤ 2 %
Recovery time	500 ms

Output data	
Contact type	1 floating PDT
Nominal insulation voltage	250 V AC (in acc. with IEC 60664-1)
Interrupting rating (ohmic load) max.	750 VA (3 A/250 V AC, module aligned, ≤ 5 mm spacing) 1250 VA (5 A/250 V AC, module not aligned, ≥ 5 mm spacing)
Output fuse	5 A (fast-blow)

Supply	
Range of supply voltages	24 V AC ... 230 V AC (see Power modules) 24 V DC (see Power modules)
Frequency range	48 Hz ... 63 Hz
Nominal power consumption	2 VA (1.5 W)

General data	
Mains type	1-phase
Service life mechanical	Approx. 2 x 10^7 cycles
Service life, electrical	2 x 10^5 cycles at ohmic load, 1000 VA
Switching frequency	max. 60 (per minute at 100 VA ohmic load) max. 6 (per minute at 1000 VA ohmic load)
Voltage drop	> 30 % (Relative to the supply voltage)
Operating mode	100% operating factor
Degree of protection	IP40 (housing) / IP20 (connection terminal blocks)
Pollution degree	2 (according to EN 50178)
Surge voltage category	III, basic insulation (as per EN 50178)
Rated insulation voltage	300 V (According to EN 50178)
Assembly	on TS 35 profile rail acc. to EN 60715
Mounting position	Any
Width	22.5 mm
Height	113 mm
Length	90 mm
Type of housing	Polyamide PA, self-extinguishing
Color	green
Weight	160 g

Connection data	
Conductor cross section, solid	0.5 mm^2 ... 2.5 mm^2
Conductor cross section, stranded	0.25 mm^2 ... 2.5 mm^2
Stripping length	8 mm
Type of connection	Screw connection
Tightening torque	1 Nm

Ambient conditions	
Ambient temperature (operation)	-25 °C ... 55 °C -25 °C ... 40 °C (corresponds to UL 508)
Ambient temperature (storage/transport)	-25 °C ... 70 °C
Permissible humidity (operation)	15 % ... 85 %
Climatic class	3K3 (in acc. with EN 60721)

Conformance / approvals	
Conformity	CE compliant
UL, USA / Canada	UL/C-UL listed UL 508

Conformance with EMC directive 2004/108/EC	
Immunity to interference according to	EN 61000-6-2
Emitted interference according to	EN 61000-6-3

Conformance with LV directive 2006/95/EC	
Electronic equipm. for electrical power installations according to	EN 50178

4 Block diagram

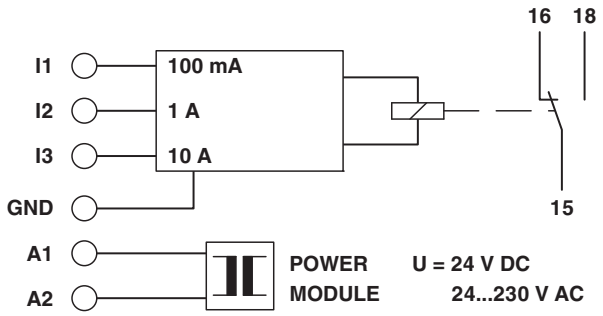

5 Safety notes

WARNING: Risk of electric shock
Never carry out work when voltage is present.

6 Structure

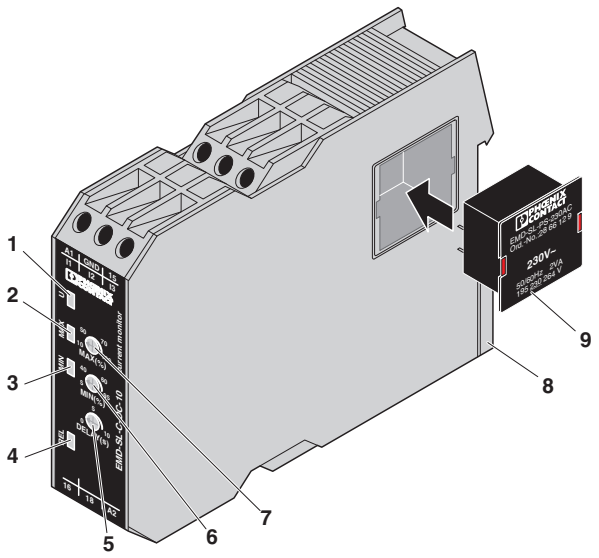

1 "U" LED: Supply voltage
2 "MAX" LED: Upper threshold value
3 "MIN" LED: Lower threshold value
4 "REL" LED: Output relay
5 "DELAY" potentiometer: Response delay
6 "MIN" potentiometer: Lower threshold value
7 "MAX" potentiometer: Upper threshold value
8 Universal snap-on foot for EN DIN rails
9 Power module

7 Power supply

The power module for power supply is supplied in a transport casing to prevent the connection legs from being bent.
To install the power module in the relay housing, remove the transport casing and position the power module in the recess in the side of the housing (ensure that it is the right way round). The red locking latches snap in with an audible click when the power module is securely positioned.
To remove the power module, press the two red locking latches together and pull out the power module.

8 Installation



WARNING: Risk of electric shock

Never carry out work when voltage is present.

The module can be snapped onto all 35 mm DIN rails according to EN 60715.

9 Diagnostics

The LEDs indicate the following error states:

"U" LED (Green)

– LED ON: Supply voltage present

"MIN" and "MAX" LEDs (Red)

– "MAX" LED flashes: Maximum value exceeded, set delay time is running
– "MAX" LED ON: Maximum value exceeded, delay time has elapsed
– Both LEDs flash alternately: Lower set threshold value is greater than upper threshold value

"REL" LED (Yellow)

– LED ON: Output relay has picked up
– LED OFF: Output relay has dropped out

10 Connection examples

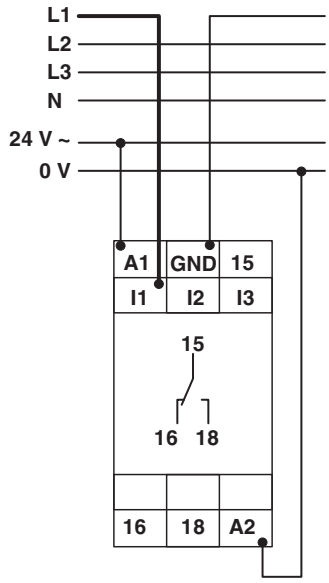

100 mA (I1) measuring range with 24 V AC power module

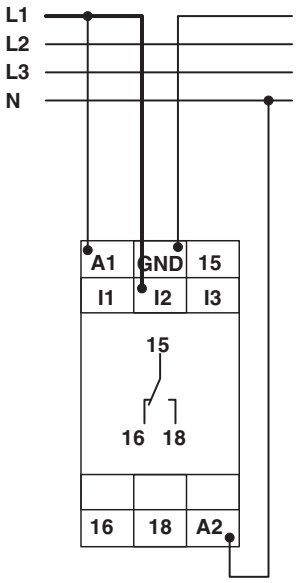

1 A (I2) measuring range with 230 V AC power module

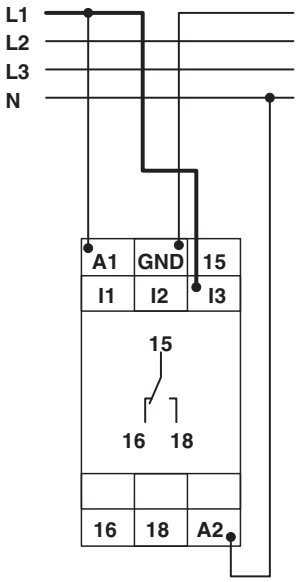

10 A (I3) measuring range with 230 V AC power module

11 Function

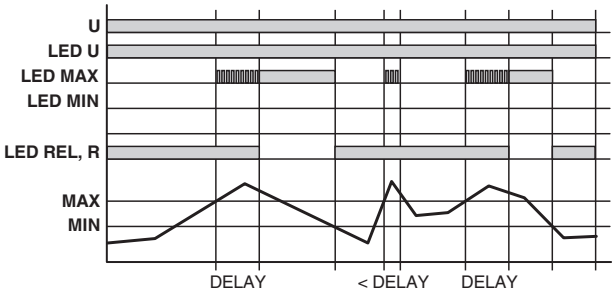

Overcurrent Monitoring (OVER)

When supply voltage U is applied, output relay "R" picks up (yellow "REL" LED is ON).
If the measured current exceeds the value set at the "MAX" controller, the set response delay (DELAY) starts (red "MAX" LED flashes). After the delay time has elapsed (red "MAX" LED is ON), output relay "R" drops out (yellow "REL" LED is OFF). If the measured current falls below the value set at the "MIN" controller (red "MAX" LED is OFF), output relay "R" picks up again (yellow "REL" LED is ON).
The "MIN" and "MAX" LEDs flash alternately if the minimum value selected for the measured current is greater than the maximum value.