LCD EMI FILTER/TVS ARRAY

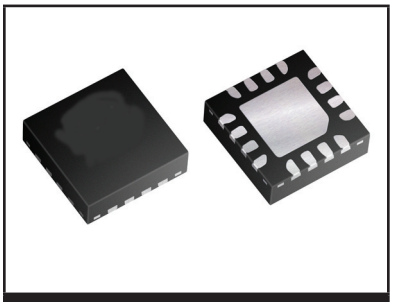

QFN-16 PACKAGE

DESCRIPTION

The EM8Q-100 is a QFN-16, 8 line low pass filter array with integrated TVS diodes. The EM8Q-100 is designed to suppress unwanted EMI/RFI signals and provide ESD protection for high-speed data interfaces such as LCD displays and SMART phones.

With a desired cutoff frequency of 150MHz, the EM8Q-100 provides good EMI/RFI attenuation better than 25dB in the 800MHz - 3GHz bandwidth. This blocks RF noises from GSM, DCS or Bluetooth which can affect the baseband chipset and other blocks. Coupled with the integrated TVS diodes, this device is able to meet IEC 61000-4-2 (ESD) and 61000-4-4 (EFT) immunity requirements.

FEATURES

- Compatible with IEC 61000-4-2 (ESD): Air - 15kV, Contact - 8kV
- Compatible with IEC 61000-4-4 (EFT): 40A - 5/50ns
- ESD Protection > 25 kilovolts
- Bidirectional EMI Filtering/TVS Low Pass Filters
- Low Insertion Loss: -3dB Roll-Off @ 150MHz
- Protects up to 8 Data Lines
- RoHS Compliant
- REACH Compliant

APPLICATIONS

- SMART Phones
- LCD Display Panel
- Portable Electronics
- SMART Cards

MECHANICAL CHARACTERISTICS

- Molded JEDEC QFN-16 Package
- Approximate Weight: 7 milligrams
- Lead-Free Pure-Tin Plating (Annealed)
- Solder Reflow Temperature:
  Pure-Tin - Sn, 100: 260-270°C
- 12mm Tape and Reel Per EIA Standard 481
- Flammability Rating UL 94V-0

CIRCUIT DIAGRAM & PIN CONFIGURATION

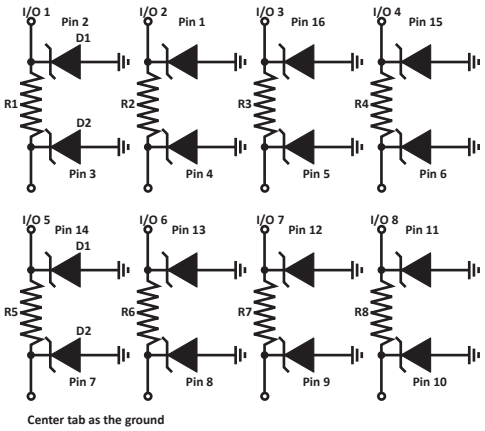

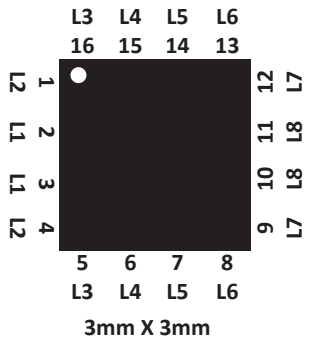

TYPICAL DEVICE CHARACTERISTICS

MAXIMUM RATINGS @ 25°C Unless Otherwise Specified			
PARAMETER	**SYMBOL**	**VALUE**	**UNITS**
Operating Temperature	T_A	-40 to 85	°C
Storage Temperature	T_{STG}	-55 to 150	°C
DC Power per Resistor	P	100	mW
Typical Resistance @ ±15%	R	100	OHMs
Soldering Temperature for 10 seconds	T_L	265	°C

ELECTRICAL CHARACTERISTICS PER LINE @ 25°C Unless Otherwise Specified							
PART NUMBER	**RATED STAND-OFF VOLTAGE** V_{WM} **VOLTS**	**MINIMUM BREAKDOWN VOLTAGE @ 1mA** $V_{(BR)}$ **VOLTS**	**MAXIMUM LEAKAGE CURRENT @ 3V** I_D **µA**	**TYPICAL FORWARD VOLTAGE @ 10mA** V_F **VOLTS**	**MINIMUM ATTENUATION @ 800-3000 MHz dB**	**CUT-OFF FREQUENCY (50 OHMS I/O) ZERO BIAS fC MHz**	**TYPICAL CAPACITANCE PER LINE (Note 1) @2.5V, 1MHz C pF**
EM8Q-100	5.0	6.0	0.1	0.8	25	150	20

NOTES
1. ± 20% tolerance.

TYPICAL DEVICE CHARACTERISTICS

FIGURE 1
TYPICAL FILTER PERFORMANCE
(T_A = 25°C, DC Bias = 0V, 50 Ohm Environment)

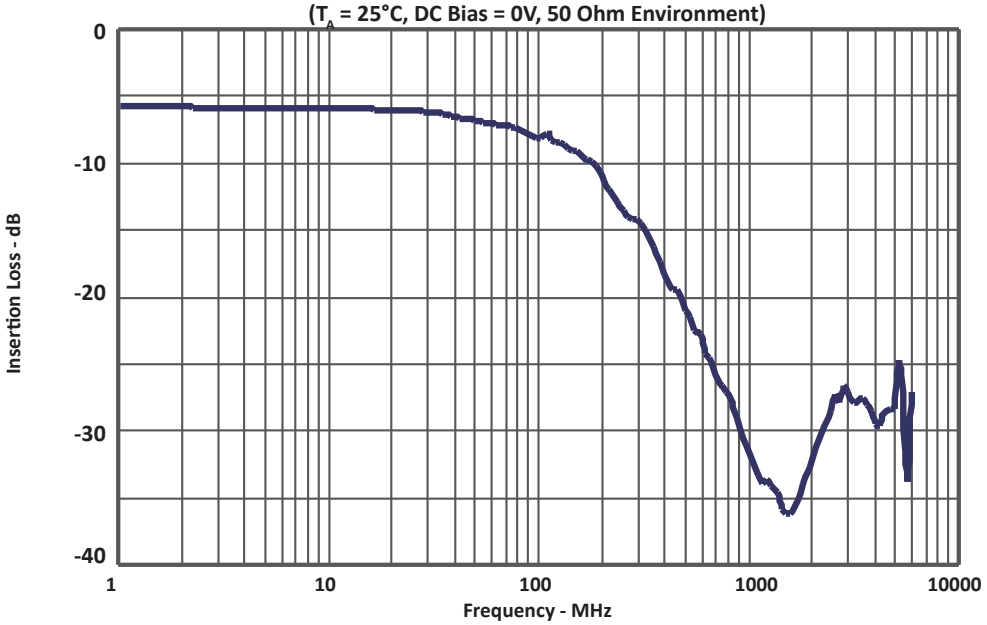

FIGURE 2
RESISTANCE VS TEMPERATURE
(Normalized to Resistance at 25°C)

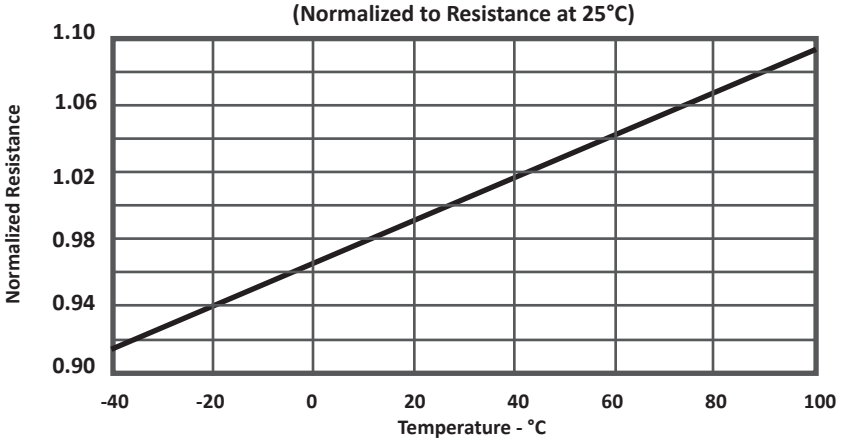

QFN-16 PACKAGE INFORMATION

OUTLINE DIMENSIONS				
DIM	MILLIMETERS		INCHES	
	MIN	MAX	MIN	MAX
A	3.00 SQ		0.118 SQ	
B	1.65	1.75	0.065	0.069
C	1.50 BSC		0.059 BSC	
D	0.50 BSC		0.020 BSC	
E	0.18	0.28	0.007	0.011
F	0.35	0.45	0.014	0.018
G	0.71	0.81	0.028	0.032
H	0.00	0.05	0.00	0.002
I	0.18	0.23	0.007	0.009

NOTES
1. Controlling dimension: inches.
2. Dimensioning and tolerances per ANSI Y14.M, 1985.
3. Decimal tolerances for mounting pad and outline .xxx ± 0.05mm (± 0.002").
4. Package length, width and height does not include protrusions, lead and gate burrs.

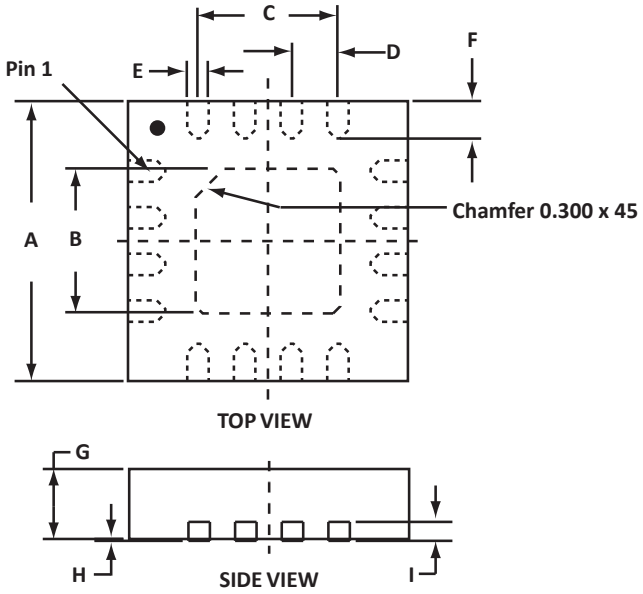

PAD LAYOUT DIMENSIONS		
DIM	MILLIMETERS	INCHES
	NOMINAL	NOMINAL
A	4.00	0.16
B	0.70	0.028
C	1.00	0.040
D	0.50	0.020
E	0.30	0.012

NOTES
1. Controlling dimension: millimeters.

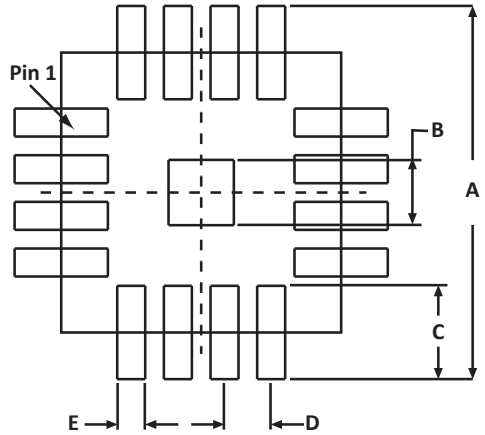

TAPE AND REEL

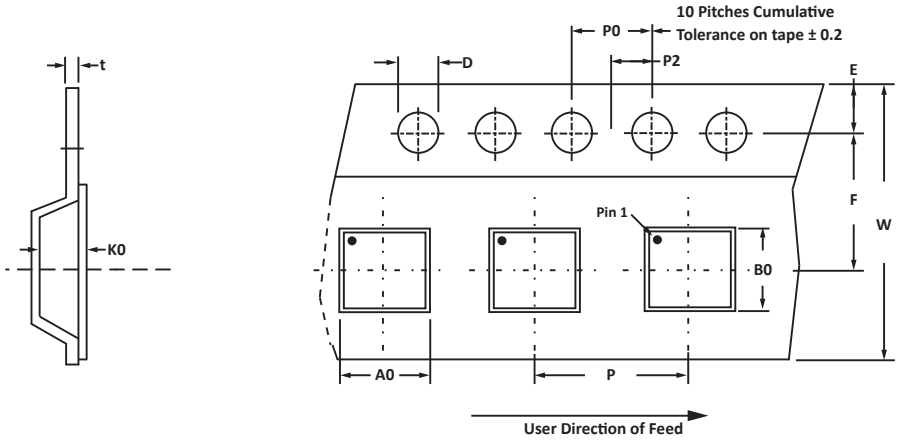

SPECIFICATIONS												
REEL DIA.	TAPE WIDTH	A0	B0	K0	D	E	F	W	P0	P2	P	tmax
178mm (7")	12mm	3.30 ± 0.10	3.30 ± 0.10	1.00 ± 0.10	1.50 ± 0.10	1.75 ± 0.10	5.50 ± 0.10	12.00 ± 0.30	4.00 ± 0.10	2.00 ± 0.05	8.00 ± 0.10	0.25

NOTES
1. Dimensions are in millimeters.
2. Surface mount product is taped and reeled in accordance with EIA-481.
3. Suffix - T73 = 7" Reel - 3,000 pieces per 12mm tape.
4. Suffix - T13 = 13" Reel - 10,000 pieces per 12mm tape.
5. Marking on Part - logo, part number and pin one defined by dot on package.

Package outline, pad layout and tape specifications per document number 06054.R3 3/11.

ORDERING INFORMATION					
BASE PART NUMBER	LEADFREE SUFFIX	TAPE SUFFIX	QTY/REEL	REEL SIZE	TUBE QTY
EM8Q-100	-LF	-T73	3,000	7"	n/a
EM8Q-100	-LF	-T13	10,000	7"	n/a

This device is only available in a Lead-Free configuration.

COMPANY INFORMATION

COMPANY PROFILE

In business more than 20 years, ProTek Devices™ is a privately-held company located in Tempe, Arizona, that offers a product line of transient voltage suppressors (TVS); avalanche breakdown diodes; steering diode TVS arrays and other surge suppressor component products. These TVS devices protect electronic systems from the effects of lightning, electrostatic discharge (ESD), nuclear electromagnetic pulses (NEMP), inductive switching and EMI / RFI. ProTek Devices also offers high performance interface and linear products that include analog switches; multiplexers; LED drivers; audio control ICs; RF and related high frequency products. The analog devices work in a host of consumer; industrial; automotive and other applications.

CONTACT US

Corporate Headquarters
2929 South Fair Lane
Tempe, Arizona 85282
USA

By Telephone
General: 602-431-8101
Sales: & Marketing: 602-414-5109
Customer Service: 602-414-5114
Product Technical Support: 602-414-5107

By Fax
General: 602-431-2288

By E-mail:
Sales: sales@protekdevices.com
Customer Service: service@protekdevices.com
Technical Support: support@protekdevices.com

ProTek Devices (Asia Pacific) Pte. Ltd.
8 Ubi Road 2, #06-19
Zervex
Singapore - 408538
Tel: +65-67488312
Fax: +65-67488313

Web
www.protekdevices.com

COPYRIGHT © ProTek Devices 2005 - This literature is subject to all applicable copyright laws and is not for resale in any manner.

SPECIFICATIONS: ProTek reserves the right to change the electrical and or mechanical characteristics described herein without notice.

DESIGN CHANGES: ProTek reserves the right to discontinue product lines without notice and that the final judgement concerning selection and specifications is the buyer's and that in furnishing engineering and technical assistance. ProTek assumes no responsibility with respect to the selection or specifications of such products. ProTek makes no warranty, representation or guarantee regarding the suitability of its products for any particular purpose, nor does ProTek assume any liability arising out of the application or use of any product or circuit and specifically disclaims any and all liability without limitation special, consequential or incidental damages.

LIFE SUPPORT POLICY: ProTek Devices products are not authorized for use in life support systems without written consent from the factory.