Read-only UHF RFID IC

Description

The chip is used in passive UHF read-only transponder applications. It is powered up by an RF beam transmitted by the reader, which is received and rectified to generate a supply voltage for the chip. A pre-programmed code is transmitted to the reader by varying the amount of energy that is reflected back to the reader. It implements a robust and fast anti-collision protocol. The chip is frequency independent and can be used for RF coupled applications where reading ranges in excess of 10 m and reading rates of 120 tags per second at 256 kbit/s can be attained.
The chip is backscattering data using load modulation. Therefore the reader should be able to detect ASK and PSK modulated carrier.

Typical Applications

The chip is ideal for applications where long range, high-speed item identification is required:

- Supply chain management
- Tracking and tracing
- Access control
- Asset control
- Licensing
- Auto-tolling
- Animal tagging
- Sports event timing

Features

- Factory programmed 64 bit ID number
- High data rate: Up to 256 kbit/s
- Frequency independent: Typically used at 869 MHz, 902 - 960 MHz (versions 001 to 099), 2.45 GHz (versions 101 to 199)
- On-chip oscillator
- On-chip rectifier
- Low voltage operation - down to 1.0 V at ambient temperature
- Low power consumption
- Low cost
- -40° to +85° C operating temperature range

Benefits

- Anti-collision suited to flux monitoring
- Very low consumption
- High backscatter amplitude
- Designed for ease of antenna attachment

Typical Operating Configuration

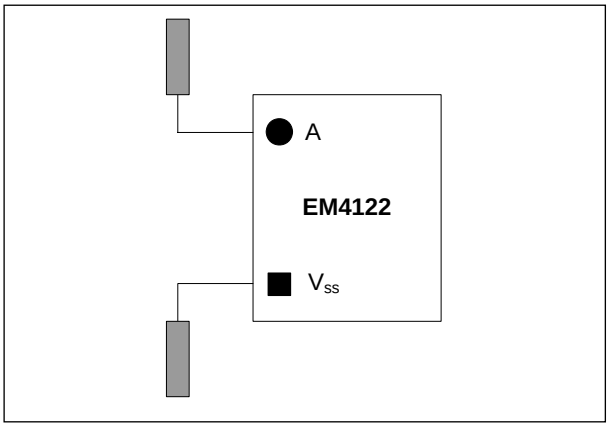

Fig. 1

UHF transponders can be implemented using an EM4122 chip and an open dipole antenna.

A COMPANY OF THE SWATCH GROUP

Copyright © 2005, EM Microelectronic-Marin SA