Chip Inductors

Japan

Series: **Chip**

Type: **F, E, D, C, A, B**

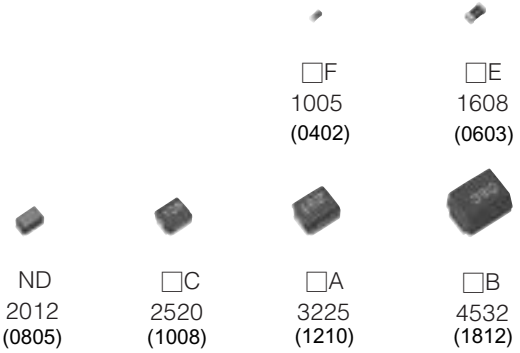

Non wound and wire wound type chip inductors for automatic and high-density mounting

Industrial Property : Patents 6 (pending)

■ Features

- High Q
- Good for mounting
- Wide availability range (1.0 nH to 1000 µH)
- Stable L -value in any mounting direction(Non winding type)

■ Recommended Applications

- Portable telephones, Wireless Communication equipment (W-LAN, BT), PDA, Camcorder, DSC, Various module, HIC, TV, VTR, PC peripherals.

■ Explanation of Part Numbers

Example of Part Number Build:

* Q Min. - Please check the each specification

** SRF (Self-Resonant Frequency)

1	2	3	4	5	6	7	8	9	10	11
E	L	J	F	A	2	2	1	J	F	
Product Code			**Type**		**Nominal Inductance**			**Tolerance**	**Packaging**	**Optional*** **

Item / Styles / Types	Laser-Cut		Wire Wound Types			
	F 1005 (0402)	E 1608 (0603)	D 2012 (0805)	C 2520 (1008)	A 3225 (1210)	B 4532 (1812)
Non Magnetic Core	RF	RE	ND	NC	NA	–
Non Magnetic Core (High Q)	QF	–	–	–	–	–
General Use	–	–	–	FC	FA	FB
Magnetic Shield	–	–	–	–	SA	–
High Current	PF	PE	–	PC	PA	PB
High Current, very low DCR	–	–	–	–	EA	–

Size unit: mm (inch)

Code	Value
2N2 -->	**2.2 nH**
22N -->	**22 nH**
R22 -->	**0.22 µH**
2R2 -->	**2.2 µH**
220 -->	**22 µH**
221 -->	**220 µH**
102 -->	**1000 µH**

Code	Value
Z:	± **0.2 nH**
D:	± **0.3 nH**
E:	± **0.5 nH**
G:	± **2 %**
A:	± **3 %**
J:	± **5 %**
K:	± **10 %**
M:	± **20 %**

F	Tape & Reel

***Note: Part Number position #11 is an optional factory designation.

Design and specifications are subject to change without notice. Ask factory for technical specifications before purchase and/or use.
Whenever a doubt about safety arises from this product, please contact us immediately for technical consultation.

■ Inductance, Size Guide

● High Frequency Equipment

Item	Size	Type	L VALUE
Laser Cut	1005 (0402) RF	Non Magnetic Core	D,Z 1.0 nH – J,Z 6.8 nH – J,G 10 nH – 100 nH
	1005 (0402) QF	Non Magnetic Core High-Q	D,Z 1.0 nH – J,Z 6.8 nH – J,G 10 nH – 39 nH
	1005 (0402) PF	High power	D,J 2.2 nH – 10 nH
	1608 (0603) RE	Non Magnetic Core	D,Z 1.0 nH – J,Z 3.9 nH – J,G 10 nH – 220 nH
	1608 (0603) PE	High power	K 2.2 nH – 22 nH

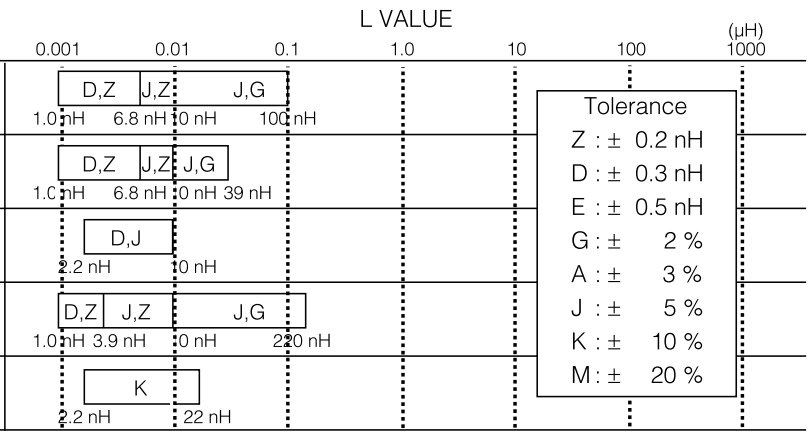

● General Equipment

Item	Size	Type	L VALUE
Wire wound type	2012 (0805) ND	Non Magnetic Core	K 10 nH – 33 nH – J,K 1000 nH
	2520 (1008) NC	Non Magnetic Core	K 10 nH – 33 nH – J,K 820 nH
	2520 (1008) FC	General Use	K,M 0.22 μH – 1.0 μH – J,K 100 μH
	2520 (1008) PC	High power	M 1.0 μH – K 6.8 μH – 33 μH
	3225 (1210) NA	Non Magnetic Core	M 0.047 μH – K 0.22 μH – J 1.0 μH – 8.2 μH
	3225 (1210) FA	General Use	K,M 0.22 μH – 1.0 μH – J,K 220 μH
	3225 (1210) SA	Shield	K 10 μH – 270 μH
	3225 (1210) PA	High power	M 1.0 μH – K 10 μH – 330 μH
	3225 (1210) EA	Low DC resistance	M 1.0 μH – K 10 μH – 330 μH
	4532 (1812) FB	General Use	M 0.22 μH – K,M 1.0 μH – J,K 10 μH – 100 μH – 1000 μH
	4532 (1812) PB	High power	K 10 μH – 220 μH

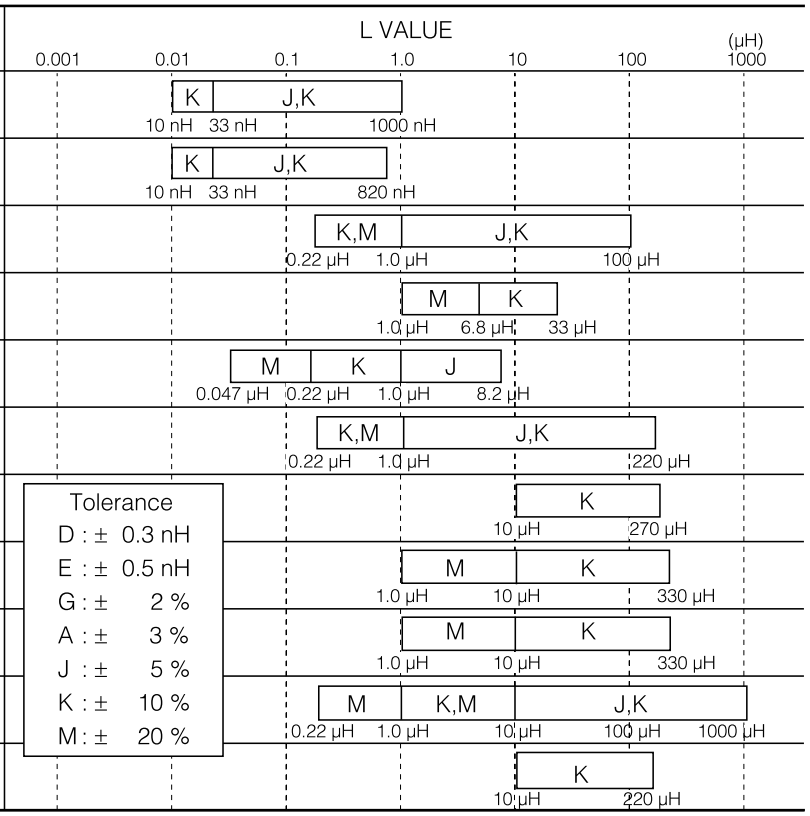

Size : mm (inch)

Design and specifications are subject to change without notice. Ask factory for technical specifications before purchase and/or use.
Whenever a doubt about safety arises from this product, please contact us immediately for technical consultation.

1. Non Magnetic Core Types RF, RE, ND, NC, NA

■ Type 1005(0402)RF

● Dimensions in mm (not to scale)

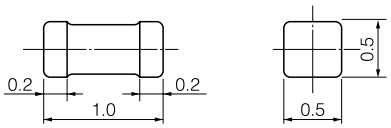

● Recommended Land Pattern in mm (not to scale)

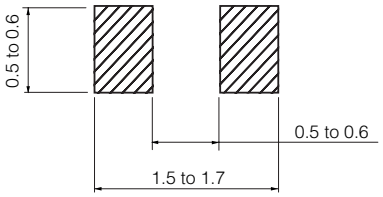

■ Standard Packing Quantity

● 10000 pcs./Reel

■ Examples

Part No.*3	Inductance		Q min.	L,Q Test Freq. (MHz)	SRF*1 (MHz)min.	DCR*2 (Ω)max.	DC Current (mA)max.
	(nH)	Tolerance					
ELJRF1N0D/ZF2	1.0	±0.3 nH / ±0.2 nH	8	100	6000	0.05	400
ELJRF1N2D/ZF2	1.2				6000	0.06	400
ELJRF1N5D/ZF2	1.5				6000	0.07	400
ELJRF1N8D/ZF2	1.8				6000	0.08	400
ELJRF2N2D/ZF2	2.2				6000	0.09	400
ELJRF2N7D/ZF2	2.7				5500	0.10	400
ELJRF3N3D/ZF2	3.3				5500	0.12	400
ELJRF3N9D/ZF2	3.9				5200	0.15	360
ELJRF4N7D/ZF2	4.7				4800	0.17	360
ELJRF5N6D/ZF2	5.6				4600	0.19	340
ELJRF6N8J/ZF2	6.8	± 5 % / ± 2 %			4000	0.30	320
ELJRF8N2J/ZF2	8.2				3500	0.35	320
ELJRF10NJ/GF2	10.0				2800	0.41	320
ELJRF12NJ/GF2	12.0				2800	0.45	320
ELJRF15NJ/GF2	15.0				2500	0.60	240
ELJRF18NJ/GF2	18.0				2200	0.70	240
ELJRF22NJ/GF2	22.0				2000	0.80	200
ELJRF27NJ/GF2	27.0				1800	1.20	200
ELJRF33NJ/GF2	33.0				1800	1.40	170
ELJRF39NJ/GF2	39.0				1800	1.70	150
ELJRF47NJ/GF2	47.0				1800	2.10	140
ELJRF56NJ/GF2	56.0				1500	2.50	130
ELJRF68NJ/GF2	68.0				1500	4.00	120
ELJRF82NJ/GF2	82.0				1400	4.50	110
ELJRFR10J/GF2	100 .0				1200	5.50	90
ELJRF3N6D/ZF2	3.6	±0.3 nH / ±0.2 nH	8	100	5300	0.14	380
ELJRF4N3D/ZF2	4.3				5000	0.16	360
ELJRF5N1D/ZF2	5.1				4700	0.18	350
ELJRF6N2D/ZF2	6.2				4300	0.25	330
ELJRF7N5J/ZF2	7.5	± 5 % / ± 2%			3700	0.33	320
ELJRF9N1J/ZF2	9.1				3100	0.38	320
ELJRF11NJ/GF2	11.0				2800	0.43	320
ELJRF13NJ/GF2	13.0				2600	0.53	280
ELJRF16NJ/GF2	16.0				2300	0.65	240
ELJRF20NJ/GF2	20.0				2100	0.75	220
ELJRF24NJ/GF2	24.0				1900	1.00	200
ELJRF30NJ/GF2	30.0				1800	1.30	190
ELJRF36NJ/GF2	36.0				1800	1.60	160
ELJRF43NJ/GF2	43.0				1800	1.90	150

*1 : Self Resonant Frequency *2 : DC Resistance *3 Lead-Free P/Ns have an "FB" suffix, rather than 'F2'

Design and specifications are subject to change without notice. Ask factory for technical specifications before purchase and/or use.
Whenever a doubt about safety arises from this product, please contact us immediately for technical consultation.

■ Type 1608(0603)RE

● Dimensions in mm (not to scale)

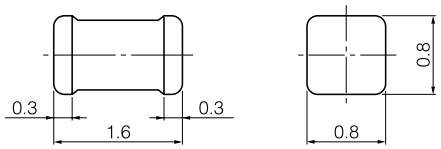

● Recommended Land Pattern in mm (not to scale)

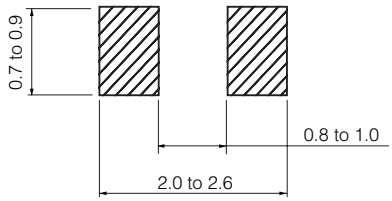

■ Standard Packing Quantity

● 3000 pcs./Reel

■ Examples

Part No.*3	Inductance			Q min.	L,Q Test Freq. (MHz)	SRF*1 (MHz)min.	DCR*2 (Ω)max.	DC Current (mA)max.
	(nH)	Tolerance						
ELJRE1N0D/ZF2	1.0	±0.3 nH	±0.2 nH	7	100	6000	0.05	500
ELJRE1N2D/ZF2	1.2					6000	0.06	500
ELJRE1N5D/ZF2	1.5			8		6000	0.07	500
ELJRE1N8D/ZF2	1.8					6000	0.08	500
ELJRE2N2D/ZF2	2.2					6000	0.09	500
ELJRE2N7D/ZF2	2.7					6000	0.10	500
ELJRE3N3D/ZF2	3.3			9		5500	0.12	500
ELJRE3N9J/ZF2	3.9	±5 %				5500	0.15	450
ELJRE4N7J/ZF2	4.7					4800	0.17	450
ELJRE5N6J/ZF2	5.6					4600	0.18	430
ELJRE6N8J/ZF2	6.8					3550	0.20	430
ELJRE8N2J/ZF2	8.2					3500	0.28	400
ELJRE10NJ/GF2	10.0		±2 %	10		2800	0.32	400
ELJRE12NJ/GF2	12.0					2800	0.35	400
ELJRE15NJ/GF2	15.0					2500	0.41	350
ELJRE18NJ/GF2	18.0					2300	0.45	350
ELJRE22NJ/GF2	22.0					2000	0.50	300
ELJRE27NJ/GF2	27.0					2000	0.55	300
ELJRE33NJ/GF2	33.0					1800	0.60	300
ELJRE39NJ/GF2	39.0			11		1800	0.80	300
ELJRE47NJ/GF2	47.0					1800	0.95	250
ELJRE56NJ/GF3	56.0			12		1800	1.20	250
ELJRE68NJ/GF3	68.0					1500	1.30	250
ELJRE82NJ/GF3	82.0					1500	1.50	250
ELJRER10J/GF3	100.0					1300	1.80	200
ELJRER12J/GF3	120.0			5	25.2	1200	3.00	130
ELJRER15J/GF3	150.0					1100	4.50	100
ELJRER18J/GF3	180.0			4		1000	6.50	80
ELJRER22J/GF3	220.0					900	7.50	70
ELJRE3N6D/ZF2	3.6	±0.3 nH	±0.2 nH	9	100	5500	0.14	500
ELJRE4N3J/ZF2	4.3	±5 %				5100	0.16	450
ELJRE5N1J/ZF2	5.1					4700	0.18	450
ELJRE6N2J/ZF2	6.2					4000	0.19	450
ELJRE7N5J/ZF2	7.5					3500	0.24	430
ELJRE9N1J/ZF2	9.1					3100	0.30	430
ELJRE11NJ/GF2	11.0		±2 %	10		2800	0.33	400
ELJRE13NJ/GF2	13.0					2600	0.38	400
ELJRE16NJ/GF2	16.0					2400	0.43	400
ELJRE20NJ/GF2	20.0					2100	0.48	350
ELJRE24NJ/GF2	24.0					2000	0.53	300
ELJRE30NJ/GF2	30.0					1900	0.58	300
ELJRE36NJ/GF2	36.0					1800	0.70	300
ELJRE43NJ/GF2	43.0					1800	0.87	300

*1 : Self Resonant Frequency *2 : DC Resistance *3 Lead-Free P/Ns have an "FA" suffix rather than 'F2' or 'F3'

Design and specifications are subject to change without notice. Ask factory for technical specifications before purchase and/or use.
Whenever a doubt about safety arises from this product, please contact us immediately for technical consultation.

■ Type 2012(0805)ND

● Dimensions in mm (not to scale)

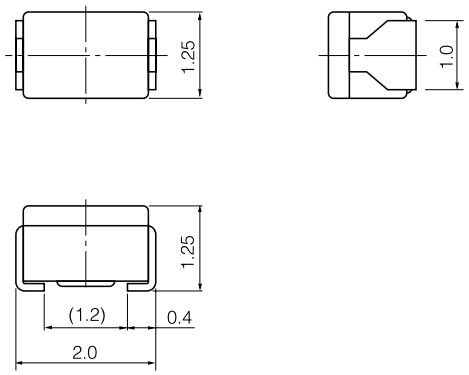

● Recommended Land Pattern in mm (not to scale)

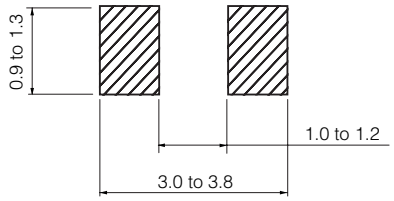

■ Standard Packing Quantity

● 3000 pcs./Reel

■ Examples

Part No.	Inductance		Q min.	L , Q Test Freq. (MHz)	Q Typical (800 MHz)	SRF *1 (MHz)min.	DCR *2 (Ω)max.	DC Current (mA)max.
	(nH)	Tolerance						
ELJND10NKF	10	±10 %	10	100	72	3300	0.18	540
ELJND12NKF	12				67	3300	0.24	535
ELJND15NKF	15		12		73	3000	0.24	520
ELJND18NKF	18				74	3000	0.29	480
ELJND22NKF	22		15		75	2600	0.29	465
ELJND27NKF	27				73	2500	0.34	455
ELJND33NJ/KF	33	± 5 % ±10 %			80	2050	0.39	395
ELJND39NJ/KF	39				72	2000	0.41	390
ELJND47NJ/KF	47				71	1650	0.46	385
ELJND56NJ/KF	56				63	1550	0.51	360
ELJND68NJ/KF	68				57	1450	0.57	340
ELJND82NJ/KF	82				56	1100	0.63	330
ELJNDR10J/KF	100		8	25.2	51	800	0.86	285
ELJNDR12J/KF	120				32	600	0.99	275
ELJNDR15J/KF	150		10		36	600	1.47	230
ELJNDR18J/KF	180				34	600	1.61	195
ELJNDR22J/KF	220				—	500	1.84	170
ELJNDR27J/KF	270				—	300	1.95	165
ELJNDR33J/KF	330				—	200	2.16	160
ELJNDR39J/KF	390				—	150	2.37	150
ELJNDR47J/KF	470				—	150	2.56	145
ELJNDR56J/KF	560				—	100	2.69	140
ELJNDR68J/KF	680				—	100	3.02	130
ELJNDR82J/KF	820				—	80	3.38	125
ELJND1R0J/KF	1000		8	7.96	—	80	3.88	120

*1 : Self Resonant Frequency *2 : DC Resistance

Design and specifications are subject to change without notice. Ask factory for technical specifications before purchase and/or use.
Whenever a doubt about safety arises from this product, please contact us immediately for technical consultation.

■ Type 2520(1008)NC

● Dimensions in mm (not to scale)

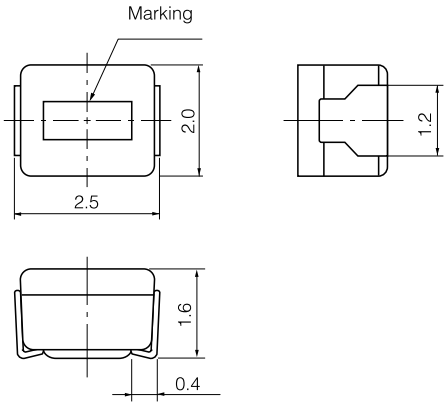

● Recommended Land Pattern in mm (not to scale)

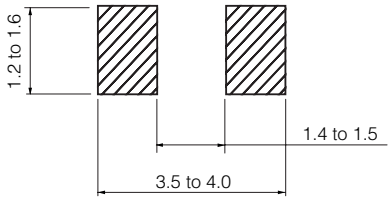

■ Standard Packing Quantity

● 2000 pcs./Reel

■ Examples

Part No.	Inductance		Q min.	L , Q Test Freq. (MHz)	SRF *1 (MHz)min.	DCR *2 (Ω)max.	DC Current (mA)max.
	(nH)	Tolerance					
ELJNC10NKF	10	±10 %	10	100	2500	0.32	280
ELJNC12NKF	12				2200	0.34	270
ELJNC15NKF	15				1800	0.38	255
ELJNC18NKF	18				1550	0.40	250
ELJNC22NKF	22		15		1350	0.43	240
ELJNC27NKF	27				1150	0.47	230
ELJNC33NK/JF	33	±10 % ± 5 %			1000	0.51	220
ELJNC39NK/JF	39				890	0.55	215
ELJNC47NK/JF	47				770	0.59	205
ELJNC56NK/JF	56				670	0.63	200
ELJNC68NK/JF	68				590	0.68	190
ELJNC82NK/JF	82				520	0.73	185
ELJNCR10K/JF	100		10	25.2	460	0.80	175
ELJNCR12K/JF	120				400	0.87	170
ELJNCR15K/JF	150				340	0.98	160
ELJNCR18K/JF	180				300	1.05	155
ELJNCR22K/JF	220				260	1.15	145
ELJNCR27K/JF	270				230	1.25	140
ELJNCR33K/JF	330				200	1.37	135
ELJNCR39K/JF	390				180	1.47	130
ELJNCR47K/JF	470				160	1.58	125
ELJNCR56K/JF	560				145	1.70	120
ELJNCR68K/JF	680				130	1.85	110
ELJNCR82K/JF	820				100	2.10	100

✻1 : Self Resonant Frequency ✻2 : DC Resistance

Design and specifications are subject to change without notice. Ask factory for technical specifications before purchase and/or use.
Whenever a doubt about safety arises from this product, please contact us immediately for technical consultation.

■ Type 3225(1210)NA

● Dimensions in mm (not to scale)

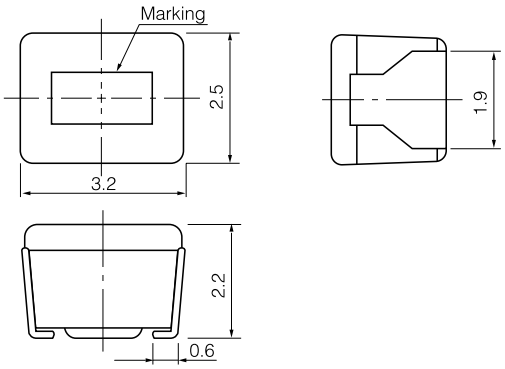

● Recommended Land Pattern in mm (not to scale)

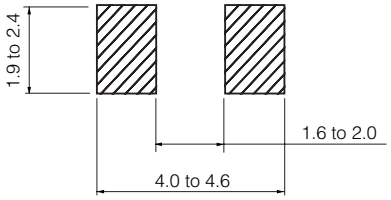

■ Standard Packing Quantity

● 2000 pcs./Reel

■ Examples

Part No.	Inductance			Q		SRF *1 (MHz)min.	DCR *2 (Ω)max.	DC Current (mA)max.
	(μH)	Freq. (MHz)	Tolerance	min.	Freq. (MHz)			
ELJNA47NMF	0.047	100	±20 %	10	100	680	0.20	450
ELJNA56NMF	0.056					600	0.22	420
ELJNA68NMF	0.068					540	0.25	400
ELJNA82NMF	0.082					500	0.27	380
ELJNAR10MF	0.100					450	0.30	360
ELJNAR12MF	0.120	25.2			25.2	400	0.67	240
ELJNAR15MF	0.150					350	0.72	230
ELJNAR18MF	0.180					320	0.81	220
ELJNAR22KF	0.220	1.0	±10 %			280	0.90	210
ELJNAR27KF	0.270					250	1.00	200
ELJNAR33KF	0.330					220	1.10	190
ELJNAR39KF	0.390					200	1.20	180
ELJNAR47KF	0.470					180	1.40	175
ELJNAR56KF	0.560					160	1.50	170
ELJNAR68KF	0.680					150	1.70	155
ELJNAR82KF	0.820					135	1.90	145
ELJNA1R0JF	1.000		± 5 %	13	7.96	120	2.10	125
ELJNA1R2JF	1.200					110	2.30	120
ELJNA1R5JF	1.500					95	2.70	115
ELJNA1R8JF	1.800					85	3.00	110
ELJNA2R2JF	2.200					80	3.20	110
ELJNA2R7JF	2.700					70	3.60	105
ELJNA3R3JF	3.300					62	4.20	100
ELJNA3R9JF	3.900					57	4.40	95
ELJNA4R7JF	4.700					52	7.70	70
ELJNA5R6JF	5.600					46	8.70	65
ELJNA6R8JF	6.800					42	10.00	60
ELJNA8R2JF	8.200					38	11.00	60

*1 : Self Resonant Frequency *2 : DC Resistance

Design and specifications are subject to change without notice. Ask factory for technical specifications before purchase and/or use.
Whenever a doubt about safety arises from this product, please contact us immediately for technical consultation.

2. Type Non Wound (High-Q) QF

■ Type 1005(0402)QF

● Dimensions in mm (not to scale)

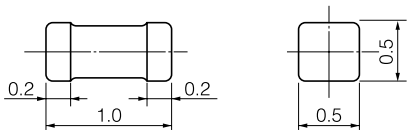

● Recommended Land Pattern in mm (not to scale)

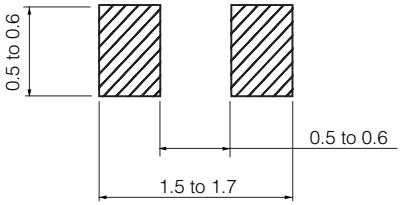

■ Standard Packing Quantity

● 10000 pcs./Reel

■ Examples

Part No.	Inductance			Q		SRF *1	DCR *2	DC Current
	(μH)	Tolerance	Freq. (MHz)	100 MHz min.	800 MHz typ.	(MHz)min.	(Ω)max.	(mA)max.
ELJQF1N0D/ZF	1.0	±0.3 nH / ±0.2 nH	100	10	41	6000	0.05	400
ELJQF1N2D/ZF	1.2					6000	0.06	400
ELJQF1N5D/ZF	1.5				40	6000	0.07	400
ELJQF1N8D/ZF	1.8					6000	0.08	400
ELJQF2N2D/ZF	2.2					6000	0.09	400
ELJQF2N7D/ZF	2.7					5500	0.10	400
ELJQF3N3D/ZF	3.3				39	5500	0.12	400
ELJQF3N9D/ZF	3.9					5200	0.15	360
ELJQF4N7D/ZF	4.7					4800	0.17	360
ELJQF5N6D/ZF	5.6					4600	0.19	340
ELJQF6N8J/ZF	6.8	±5 % / ±2 %				4000	0.30	320
ELJQF8N2J/ZF	8.2					3500	0.35	320
ELJQF10NJ/GF	10.0					2800	0.41	320
ELJQF12NJ/GF	12.0				38	2800	0.45	320
ELJQF15NJ/GF	15.0				36	2500	0.60	240
ELJQF18NJ/GF	18.0					2200	0.70	240
ELJQF22NJ/GF	22.0					2200	0.80	200
ELJQF27NJ/GF	27.0					1800	1.20	200
ELJQF33NJ/GF	33.0				35	1800	1.40	170
ELJQF39NJ/GF	39.0					1800	1.70	150

✻1 : Self Resonant Frequency ✻2 : DC Resistance

Design and specifications are subject to change without notice. Ask factory for technical specifications before purchase and/or use.
Whenever a doubt about safety arises from this product, please contact us immediately for technical consultation.

3. Normal Types FC, FA, FB

■ Type 2520(1008)FC

● Dimensions in mm (not to scale)

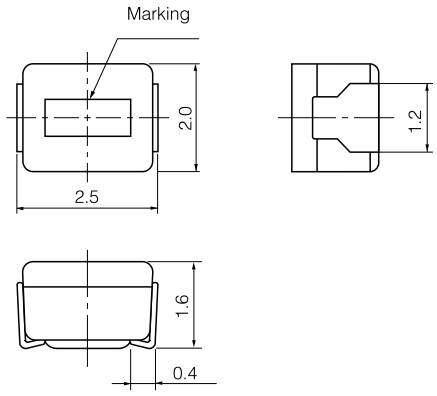

● Recommended Land Pattern in mm (not to scale)

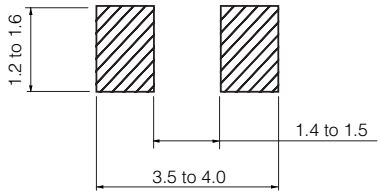

■ Standard Packing Quantity

● 2000 pcs./Reel

■ Examples

Part No.	Inductance		Q min.	L , Q Test Freq. (MHz)	SRF *1 (MHz)min.	DCR *2 (Ω)max.	DC Current (mA)max.
	(μH)	Tolerance					
ELJFCR22M/KF	0.22	±20 % ±10 %	25	25.2	230	0.70	190
ELJFCR27M/KF	0.27				210	0.75	180
ELJFCR33M/KF	0.33				190	0.85	170
ELJFCR39M/KF	0.39				175	0.95	160
ELJFCR47M/KF	0.47				160	1.00	155
ELJFCR56M/KF	0.56				150	1.10	150
ELJFCR68M/KF	0.68				135	1.25	140
ELJFCR82M/KF	0.82				125	1.40	130
ELJFC1R0K/JF	1.00	±10 % ± 5 %		7.96	115	0.65	195
ELJFC1R2K/JF	1.20				100	0.75	180
ELJFC1R5K/JF	1.50				90	0.85	170
ELJFC1R8K/JF	1.80				85	0.95	160
ELJFC2R2K/JF	2.20				80	1.05	155
ELJFC2R7K/JF	2.70				75	1.20	145
ELJFC3R3K/JF	3.30				65	1.30	135
ELJFC3R9K/JF	3.90				60	1.40	130
ELJFC4R7K/JF	4.70				55	1.55	125
ELJFC5R6K/JF	5.60				50	1.75	120
ELJFC6R8K/JF	6.80				45	1.95	115
ELJFC8R2K/JF	8.20				40	2.20	105
ELJFC100K/JF	10.00			2.52	32	3.50	80
ELJFC120K/JF	12.00				30	3.80	75
ELJFC150K/JF	15.00				28	4.40	70
ELJFC180K/JF	18.00				25	5.00	65
ELJFC220K/JF	22.00				22	5.80	60
ELJFC270K/JF	27.00		20		21	6.30	115
ELJFC330K/JF	33.00				20	7.10	110
ELJFC390K/JF	39.00				18	9.50	90
ELJFC470K/JF	47.00				17	11.00	80
ELJFC560K/JF	56.00				16	12.10	75
ELJFC680K/JF	68.00				15	16.60	70
ELJFC820K/JF	82.00				13	19.00	65
ELJFC101K/JF	100.00		15	0.796	12	21.00	60

✻1 : Self Resonant Frequency ✻2 : DC Resistance

Design and specifications are subject to change without notice. Ask factory for technical specifications before purchase and/or use.
Whenever a doubt about safety arises from this product, please contact us immediately for technical consultation.

■ Type 3225(1210)FA

● Dimensions in mm (not to scale)

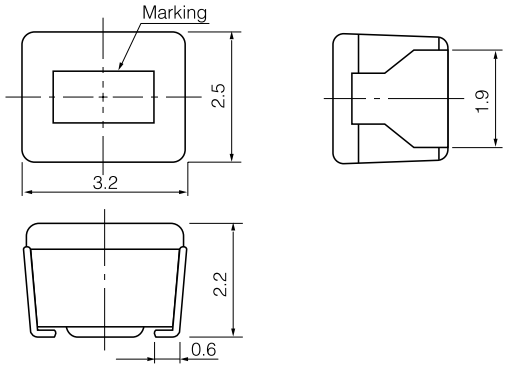

● Recommended Land Pattern in mm (not to scale)

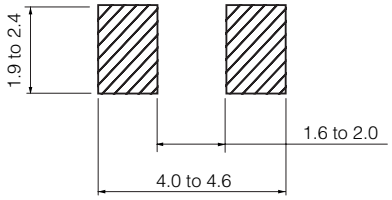

■ Standard Packing Quantity

● 2000 pcs./Reel

■ Examples

Part No.	Inductance		Q min.	L , Q Test Freq. (MHz)	SRF *1 (MHz)min.	DCR *2 (Ω)max.	DC Current (mA)max.
	(μH)	Tolerance					
ELJFAR22M/KF2	0.22	±20 % ±10 %	25	25.2	230	0.29	360
ELJFAR27M/KF2	0.27				210	0.32	345
ELJFAR33M/KF2	0.33				190	0.35	330
ELJFAR39M/KF2	0.39				175	0.39	305
ELJFAR47M/KF2	0.47				160	0.44	290
ELJFAR56M/KF2	0.56				150	0.49	275
ELJFAR68M/KF2	0.68				135	0.55	260
ELJFAR82M/KF2	0.82				125	0.61	245
ELJFA1R0K/JF2	1.00	±10 % ± 5 %	30	7.96	115	0.69	230
ELJFA1R2K/JF2	1.20				100	0.75	215
ELJFA1R5K/JF	1.50				90	0.75	210
ELJFA1R8K/JF	1.80				85	0.82	200
ELJFA2R2K/JF	2.20				80	0.95	190
ELJFA2R7K/JF	2.70				75	1.10	180
ELJFA3R3K/JF	3.30				65	1.20	180
ELJFA3R9K/JF	3.90				60	1.30	175
ELJFA4R7K/JF	4.70				55	1.50	165
ELJFA5R6K/JF	5.60				50	1.60	160
ELJFA6R8K/JF	6.80				45	1.80	150
ELJFA8R2K/JF	8.20				40	2.00	140
ELJFA100K/JF	10.00			2.52	36	2.10	140
ELJFA120K/JF	12.00				33	2.50	125
ELJFA150K/JF	15.00				30	2.80	120
ELJFA180K/JF	18.00				27	3.30	110
ELJFA220K/JF	22.00				25	3.70	105
ELJFA270K/JF	27.00				22	5.00	90
ELJFA330K/JF	33.00				20	5.60	85
ELJFA390K/JF	39.00				20	6.40	80
ELJFA470K/JF	47.00				15	7.00	75
ELJFA560K/JF	56.00				15	8.00	70
ELJFA680K/JF	68.00				15	9.00	65
ELJFA820K/JF	82.00				11	10.00	60
ELJFA101K/JF	100.00		20	0.796	10	10.00	60
ELJFA121K/JF	120.00				10	11.00	55
ELJFA151K/JF	150.00				8	15.00	50
ELJFA181K/JF	180.00				7	17.00	50
ELJFA221K/JF	220.00				7	21.00	45

*1 : Self Resonant Frequency *2 : DC Resistance

Design and specifications are subject to change without notice. Ask factory for technical specifications before purchase and/or use.
Whenever a doubt about safety arises from this product, please contact us immediately for technical consultation.

■ Type 4532(1812)FB

● Dimensions in mm (not to scale)

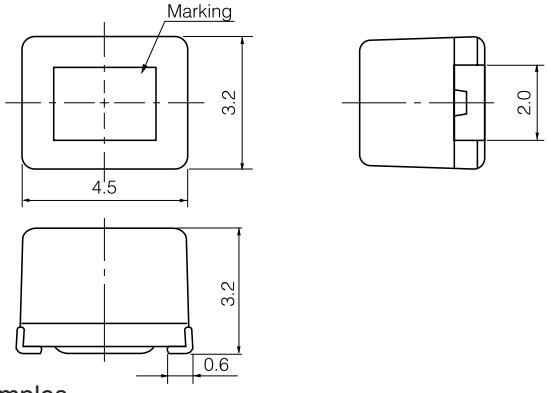

● Recommended Land Pattern in mm (not to scale)

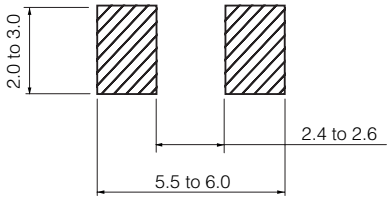

■ Standard Packing Quantity

● 500 pcs./Reel

■ Examples

Part No.	Inductance			Q		SRF *1 (MHz)min.	DCR *2 (Ω)max.	DC Current (mA)max.
	(μH)	Freq. (MHz)	Tolerance	min.	Freq. (MHz)			
ELJFBR22MF	0.22	1.0	±20 %	30	25.2	230.0	0.30	700
ELJFBR27MF	0.27					200.0	0.32	650
ELJFBR33MF	0.33					180.0	0.35	630
ELJFBR39MF	0.39					155.0	0.37	620
ELJFBR47MF	0.47					135.0	0.40	580
ELJFBR56MF	0.56					120.0	0.42	560
ELJFBR68MF	0.68					105.0	0.48	530
ELJFBR82MF	0.82					90.0	0.50	500
ELJFB1R0M/KF	1.00		±20 % ±10 %			80.0	0.52	470
ELJFB1R2M/KF	1.20					70.0	0.55	460
ELJFB1R5M/KF	1.50					60.0	0.61	430
ELJFB1R8M/KF	1.80					50.0	0.61	410
ELJFB2R2M/KF	2.20				7.96	45.0	0.61	410
ELJFB2R7M/KF	2.70			50		43.0	0.61	400
ELJFB3R3M/KF	3.30					39.0	0.66	380
ELJFB3R9M/KF	3.90					36.0	0.74	360
ELJFB4R7M/KF	4.70				5	33.0	0.81	350
ELJFB5R6M/KF	5.60					30.0	0.88	330
ELJFB6R8M/KF	6.80					26.0	1.00	310
ELJFB8R2M/KF	8.20					24.0	1.60	250
ELJFB100K/JF	10.00		±10 % ±5 %			22.0	1.80	235
ELJFB120K/JF	12.00					20.0	1.90	225
ELJFB150K/JF	15.00					18.0	2.10	215
ELJFB180K/JF	18.00					16.0	2.30	205
ELJFB220K/JF	22.00				2.52	15.0	2.60	195
ELJFB270K/JF	27.00					13.0	2.90	185
ELJFB330K/JF	33.00					12.0	3.10	175
ELJFB390K/JF	39.00					10.0	3.60	165
ELJFB470K/JF	47.00					9.7	4.20	130
ELJFB560K/JF	56.00	0.1		40		9.0	4.70	125
ELJFB680K/JF	68.00					8.2	5.30	115
ELJFB820K/JF	82.00					7.5	5.90	110
ELJFB101K/JF	100.00					6.7	8.80	105
ELJFB121K/JF	120.00				1.5	6.1	10.00	100
ELJFB151K/JF	150.00					5.5	11.00	95
ELJFB181K/JF	180.00					5.1	13.00	85
ELJFB221K/JF	220.00				0.796	4.5	13.00	85
ELJFB271K/JF	270.00					4.1	14.00	80
ELJFB331K/JF	330.00					3.7	16.00	75
ELJFB391K/JF	390.00					3.3	19.00	70
ELJFB471K/JF	470.00			30		3.3	31.00	55
ELJFB561K/JF	560.00					2.7	35.00	50
ELJFB681K/JF	680.00					2.5	39.00	50
ELJFB821K/JF	820.00					2.4	45.00	45
ELJFB102K/JF	1000.00					2.1	53.00	40

*1 : Self Resonant Frequency *2 : DC Resistance

Design and specifications are subject to change without notice. Ask factory for technical specifications before purchase and/or use.
Whenever a doubt about safety arises from this product, please contact us immediately for technical consultation.

4. Magnetic Shielded Type SA

■ Type 3225(1210)SA

● Dimensions in mm (not to scale)

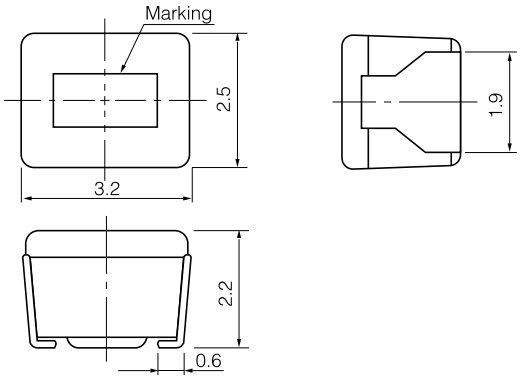

● Recommended Land Pattern in mm (not to scale)

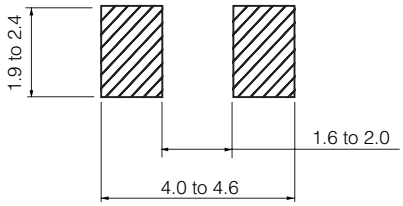

■ Standard Packing Quantity

● 2000 pcs./1 reel

■ Examples

Part No.	Inductance			Q		SRF *1 (MHz)min.	DCR *2 (Ω)max.	DC Current (mA)max.
	(μH)	Freq. (MHz)	Tolerance	min.	Freq. (MHz)			
ELJSA100KF	10	1.0	±10 %	40	5.0	30	1.8	18
ELJSA120KF	12					28	2.0	17
ELJSA150KF	15					25	2.2	15
ELJSA180KF	18					23	2.5	13
ELJSA220KF	22					20	2.8	12
ELJSA270KF	27					18	3.2	10
ELJSA330KF	33					17	3.5	10
ELJSA390KF	39					15	3.8	9
ELJSA470KF	47					14	4.0	8
ELJSA560KF	56					13	4.5	7
ELJSA680KF	68				1.5	12	5.0	6
ELJSA820KF	82					11	6.0	6
ELJSA101KF	100					10	7.0	5
ELJSA121KF	120					9	8.0	5
ELJSA151KF	150	0.1				5	9.0	5
ELJSA181KF	180					5	11.0	5
ELJSA221KF	220					4	12.0	5
ELJSA271KF	270					4	14.0	5

*1 : Self Resonant Frequency *2 : DC Resistance

Design and specifications are subject to change without notice. Ask factory for technical specifications before purchase and/or use.
Whenever a doubt about safety arises from this product, please contact us immediately for technical consultation.

5. High Power Types PF, PE, PC, PA, PB

■ Type 1005(0402)PF

● Dimensions in mm (not to scale)

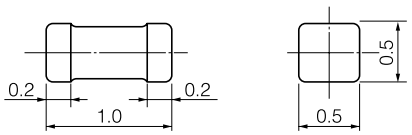

● Recommended Land Pattern in mm (not to scale)

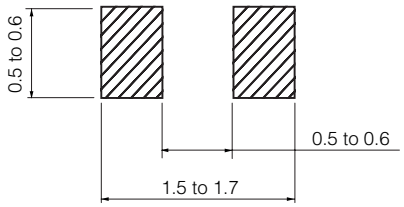

■ Standard Packing Quantity

● 10000 pcs./Reel

■ Examples

Part No.*3	Inductance		Q min.	L , Q Test Freq. (MHz)	SRF *1 (MHz)min.	DCR *2 (Ω)max.	DC Current (mA)max.
	(nH)	Tolerance					
ELJPF2N2DF	2.2	± 0.3 nH	7	100	5300	0.04	1900
ELJPF2N7DF	2.7				5300	0.05	1800
ELJPF3N3DF	3.3				5000	0.07	1500
ELJPF3N9DF	3.9				4800	0.08	1400
ELJPF4N7DF	4.7				4600	0.10	1300
ELJPF5N6DF	5.6				4200	0.12	1200
ELJPF6N8JF	6.8	± 5 %			4000	0.16	1100
ELJPF8N2JF	8.2				3700	0.21	900
ELJPF10NJF	10.0				3200	0.26	750

*1 : Self Resonant Frequency *2 : DC Resistance *3 Lead-Free P/Ns have an "FB" suffix, rather than 'F'

Design and specifications are subject to change without notice. Ask factory for technical specifications before purchase and/or use.
Whenever a doubt about safety arises from this product, please contact us immediately for technical consultation.

■ Type 1608(0603)PE

● Dimensions in mm (not to scale)

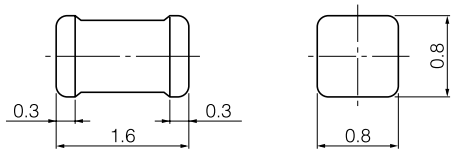

● Recommended Land Pattern in mm (not to scale)

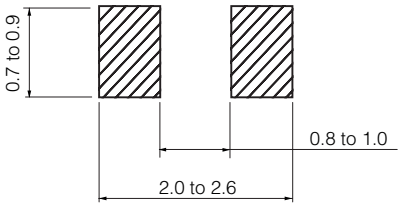

■ Standard Packing Quantity

● 3000 pcs./Reel

■ Examples

Part No.*3	Inductance		Q min.	L , Q Test Freq. (MHz)	SRF *1 (MHz) min.	DCR *2 (Ω)max.	DC Current (mA)max.
	(nH)	Tolerance					
ELJPE2N2KF	2.2	± 10 %	8	100	6000	0.030	2100
ELJPE2N7KF	2.7				5500	0.030	2100
ELJPE3N3KF	3.3				5500	0.040	2100
ELJPE3N9KF	3.9		9		5200	0.040	2100
ELJPE4N7KF	4.7				4800	0.050	2100
ELJPE5N6KF	5.6				4600	0.055	2100
ELJPE6N8KF	6.8				4000	0.055	1900
ELJPE8N2KF	8.2				3500	0.060	1700
ELJPE10NKF	10.0				2800	0.065	1400
ELJPE12NKF	12.0				2500	0.080	1300
ELJPE15NKF	15.0				2200	0.100	900
ELJPE18NKF	18.0				2000	0.120	800
ELJPE22NKF	22.0				1800	0.150	700

*1 : Self Resonant Frequency *2 : DC Resistance *3 Lead-Free P/Ns have an "FA" suffix, rather than 'F'

Design and specifications are subject to change without notice. Ask factory for technical specifications before purchase and/or use.
Whenever a doubt about safety arises from this product, please contact us immediately for technical consultation.

■ Type 2520(1008)PC

● Dimensions in mm (not to scale)

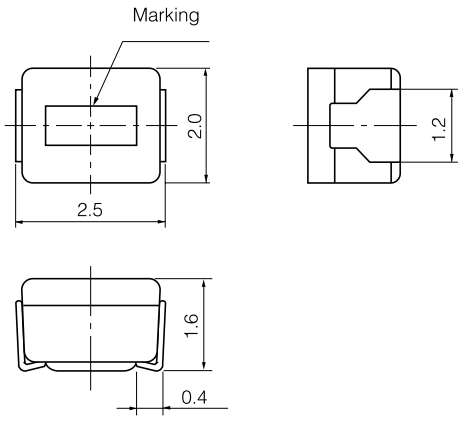

● Recommended Land Pattern in mm (not to scale)

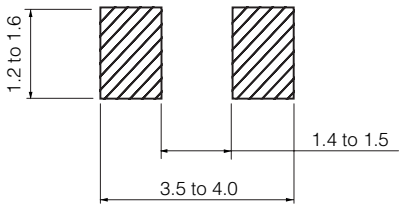

■ Standard Packing Quantity

● 2000 pcs./Reel

■ Examples

Part No.	Inductance		Q min.	L , Q Test Freq. (MHz)	SRF *1 (MHz)min.	DCR *2 (Ω)max.	DC Current (mA)max.
	(μH)	Tolerance					
ELJPC1R0MF	1.0	±20 %	10	7.96	95	0.45	475
ELJPC1R5MF	1.5				85	0.55	435
ELJPC2R2MF	2.2				65	0.65	390
ELJPC3R3MF	3.3		8		55	0.85	340
ELJPC4R7MF	4.7				43	1.20	285
ELJPC6R8KF	6.8	±10 %	8.5		44	1.30	170
ELJPC100KF	10.0		20	2.52	32	2.20	210
ELJPC120KF	12.0				25	2.70	195
ELJPC150KF	15.0				21	3.20	175
ELJPC220KF	22.0				18	4.00	160
ELJPC330KF	33.0				16	6.50	120

✻1 : Self Resonant Frequency ✻2 : DC Resistance

Design and specifications are subject to change without notice. Ask factory for technical specifications before purchase and/or use.
Whenever a doubt about safety arises from this product, please contact us immediately for technical consultation.

■ Type 3225(1210)PA

● Dimensions in mm (not to scale)

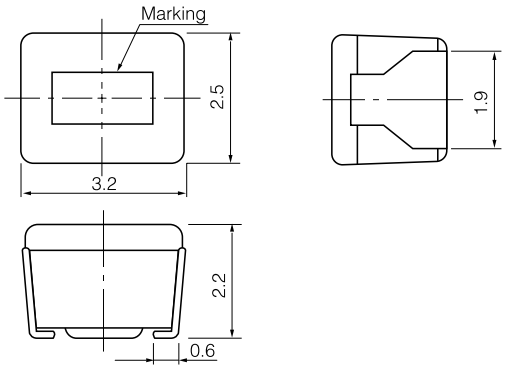

● Recommended Land Pattern in mm (not to scale)

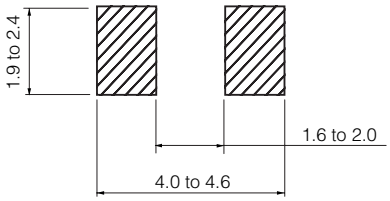

■ Standard Packing Quantity

● 2000 pcs./Reel

■ Examples

Part No.	Inductance		Q min.	L , Q Test Freq. (MHz)	SRF *1 (MHz)min.	DCR *2 (Ω)max.	DC Current (mA)max.
	(μH)	Tolerance					
ELJPA1R0MF	1.0	±20 %	7	7.96	150.0	0.15	600
ELJPA1R5MF	1.5				110.0	0.18	550
ELJPA2R2MF	2.2				80.0	0.23	500
ELJPA3R3MF	3.3				58.0	0.28	400
ELJPA4R7MF	4.7				46.0	0.34	350
ELJPA6R8MF	6.8				38.0	0.42	300
ELJPA100KF	10.0	±10 %	15	2.52	23.0	0.50	240
ELJPA120KF	12.0				21.0	0.60	230
ELJPA150KF	15.0				18.0	0.74	220
ELJPA180KF	18.0				17.0	0.90	205
ELJPA220KF	22.0				15.0	1.15	185
ELJPA270KF	27.0				13.0	1.45	165
ELJPA330KF	33.0				12.0	1.65	155
ELJPA390KF	39.0				11.0	1.90	145
ELJPA470KF	47.0				9.5	2.25	135
ELJPA560KF	56.0				8.5	3.30	110
ELJPA680KF	68.0				7.5	3.70	105
ELJPA820KF	82.0				7.0	4.20	100
ELJPA101KF	100.0		20	0.796	6.5	5.00	90
ELJPA121KF	120.0				6.0	7.00	75
ELJPA151KF	150.0				5.5	8.00	70
ELJPA181KF	180.0				5.0	9.50	65
ELJPA221KF	220.0				4.0	11.00	60
ELJPA271KF	270.0				3.5	14.50	55
ELJPA331KF	330.0				3.0	16.00	50

*1 : Self Resonant Frequency *2 : DC Resistance

Design and specifications are subject to change without notice. Ask factory for technical specifications before purchase and/or use.
Whenever a doubt about safety arises from this product, please contact us immediately for technical consultation.

■ Type 4532(1812)PB

● Dimensions in mm (not to scale)

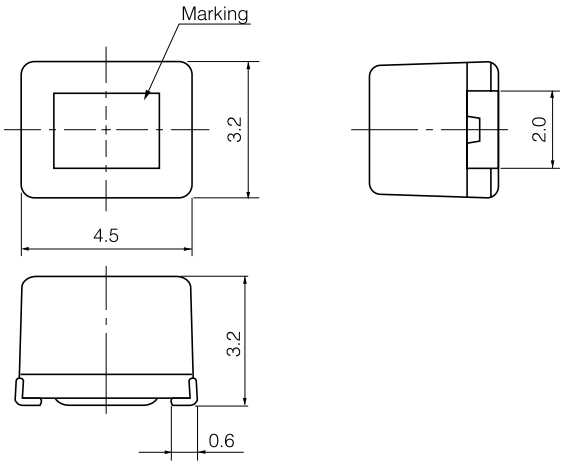

● Recommended Land Pattern in mm (not to scale)

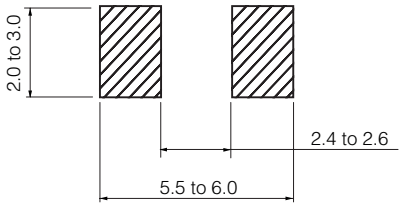

■ Standard Packing Quantity

● 500 pcs./Reel

■ Examples

Part No.	Inductance		Q min.	L , Q Test Freq. (MHz)	SRF *1 (MHz)min.	DCR *2 (Ω)max.	DC Current (mA)max.
	(μH)	Tolerance					
ELJPB100KF	10	±10 %	10	2.52	19.0	0.65	360
ELJPB120KF	12				17.0	0.70	340
ELJPB150KF	15				15.0	0.80	320
ELJPB180KF	18				14.0	0.90	310
ELJPB220KF	22				13.0	1.00	300
ELJPB270KF	27				11.0	1.20	270
ELJPB330KF	33				10.0	1.40	250
ELJPB390KF	39				9.5	1.60	230
ELJPB470KF	47				8.5	1.90	210
ELJPB560KF	56				8.0	2.20	190
ELJPB680KF	68				7.0	2.60	170
ELJPB820KF	82				6.5	3.50	160
ELJPB101KF	100		20	0.796	6.0	4.00	150
ELJPB121KF	120				5.5	4.50	130
ELJPB151KF	150				5.0	6.50	120
ELJPB181KF	180				4.5	7.50	110
ELJPB221KF	220				4.0	9.00	90

✻1 : Self Resonant Frequency ✻2 : DC Resistance

Design and specifications are subject to change without notice. Ask factory for technical specifications before purchase and/or use.
Whenever a doubt about safety arises from this product, please contact us immediately for technical consultation.

6. Low DC resistance Type EA

■ Type 3225(1210)EA

● Dimensions in mm (not to scale)

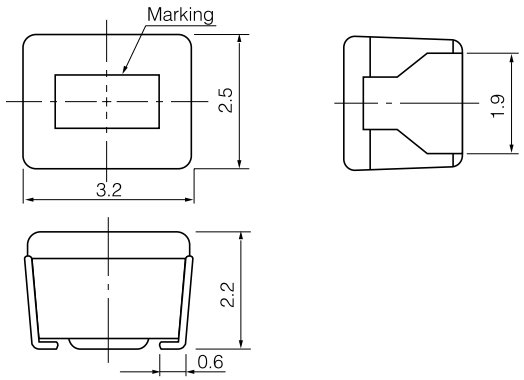

● Recommended Land Pattern in mm (not to scale)

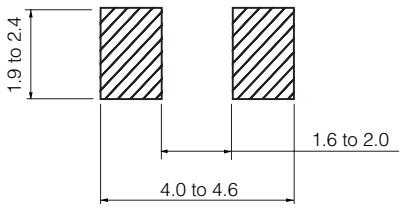

■ Standard Packing Quantity

● 2000 pcs./Reel

■ Examples

Part No.	Inductance		Q min.	L , Q Test Freq. (MHz)	SRF *1 (MHz)min.	DCR *2 (Ω)max.	DC Current (mA)max.
	(μH)	Tolerance					
ELJEA1R0MF	1.0	±20 %	7	7.96	100.0	0.09	500
ELJEA1R5MF	1.5				80.0	0.10	390
ELJEA2R2MF	2.2				65.0	0.13	350
ELJEA3R3MF	3.3				50.0	0.16	270
ELJEA4R7MF	4.7				46.0	0.18	240
ELJEA6R8MF	6.8				36.0	0.25	200
ELJEA100KF	10.0	±10 %	10	2.52	29.0	0.34	160
ELJEA150KF	15.0				25.0	0.42	145
ELJEA220KF	22.0				18.0	0.65	115
ELJEA330KF	33.0				16.0	0.91	95
ELJEA470KF	47.0				13.0	1.30	80
ELJEA680KF	68.0				10.0	1.95	60
ELJEA101KF	100.0		20	0.796	8.0	3.12	50
ELJEA151KF	150.0				7.0	4.03	45
ELJEA221KF	220.0				5.0	7.15	35
ELJEA331KF	330.0				4.0	9.23	30

*1 : Self Resonant Frequency *2 : DC Resistance

Design and specifications are subject to change without notice. Ask factory for technical specifications before purchase and/or use.
Whenever a doubt about safety arises from this product, please contact us immediately for technical consultation.