DATASHEET

# 4 PIN DIP HIGH VOLTAGE PHOTOTRANSISTOR PHOTOCOUPLER
# EL851 Series

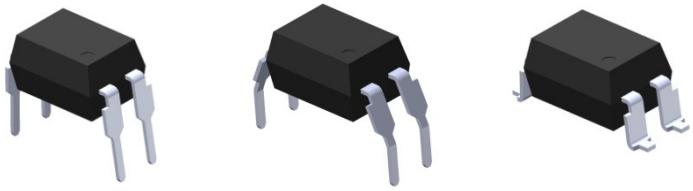

Schematic

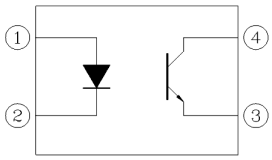


Pin Configuration
1. Anode
2. Cathode
3. Emitter
4. Collector

## Features:

- High collector- emitter voltage ($V_{CEO}$=350V)
- Current transfer ratio
  (CTR: 50~600% at $I_F$ =5mA, $V_{CE}$ =5V)
- High isolation voltage between input
  and output (Viso=5000 V rms )
- Compact dual-in-line package
- Pb free and RoHS compliant.
- UL approved (No. E214129)
- VDE approved (No. 132249)
- SEMKO approved
- NEMKO approved
- DEMKO approved
- FIMKO approved

## Description

The EL851 series devices consist an infrared emitting diodes, optically coupled to a phototransistor detector.
The devices are in a 4-pin DIP package and available in wide-lead spacing and SMD option.

## Applications

- Telephone line interface
- Interface to power supply circuit
- Controller for SSRs. DC motor
- Programmable Controllers


Copyright © 2010, Everlight All Rights Reserved. Release Date : May 27, 2014. Issue No: DPC-0000082 Rev. 5

## Absolute Maximum Ratings (Ta=25℃)

| Parameter | | Symbol | Rating | Unit |
|---|---|---|---|---|
| Input | Forward current | $I_F$ | 60 | mA |
| | Peak forward current (1μs pulse) | $I_{FM}$ | 1 | A |
| | Reverse voltage | $V_R$ | 6 | V |
| | Power dissipation | $P_D$ | 100 | mW |
| Output | Collector power dissipation | $P_C$ | 150 | mW |
| | Collector-Emitter voltage | $V_{CEO}$ | 350 | V |
| | Collector Current | $I_C$ | 50 | mA |
| | Emitter-Collector voltage | $V_{ECO}$ | 7 | V |
| Total Power Dissipation | | $P_{TOT}$ | 200 | mW |
| Isolation Voltage*1 | | $V_{ISO}$ | 5000 | V rms |
| Operating Temperature | | $T_{OPR}$ | -55 to 100 | ℃ |
| Storage Temperature | | $T_{STG}$ | -55 to 125 | ℃ |
| Soldering Temperature*2 | | $T_{SOL}$ | 260 | ℃ |

Notes:
*1 AC for 1 minute, R.H.= 40 ~ 60% R.H. In this test, pins 1, 2 are shorted together, and pins 3, 4 are shorted together.
*2 For 10 seconds


Copyright © 2010, Everlight All Rights Reserved. Release Date : May 27, 2014. Issue No: DPC-0000082 Rev. 5

## Electro-Optical Characteristics (Ta=25℃ unless specified otherwise)

### Input

| Parameter | Symbol | Min. | Typ. | Max. | Unit | Condition |
|---|---|---|---|---|---|---|
| Forward Voltage | $V_F$ | - | 1.2 | 1.4 | V | $I_F$ = 10mA |
| Reverse Current | $I_R$ | - | - | 10 | μA | $V_R$ = 5V |
| Input capacitance | $C_{in}$ | - | 30 | 250 | pF | V = 0, f = 1kHz |

### Output

| Parameter | Symbol | Min | Typ. | Max. | Unit | Condition |
|---|---|---|---|---|---|---|
| Collector-Emitter dark current | $I_{CEO}$ | - | - | 100 | nA | $V_{CE}$ = 200V |
| Collector-Emitter breakdown voltage | $BV_{CEO}$ | 350 | - | - | V | $I_C$ = 0.1mA |
| Emitter-Collector breakdown voltage | $BV_{ECO}$ | 7 | - | - | V | $I_E$ = 0.1mA |
| Collector-Emitter capacitance | $C_{CE}$ | - | 10 | - | pF | VCE = 0V, f = 1MHz |

### Transfer Characteristics

| Parameter | Symbol | Min | Typ. | Max. | Unit | Condition |
|---|---|---|---|---|---|---|
| Current Transfer Ratio | CTR | 50 | - | 600 | % | $I_F$ = 5mA ,$V_{CE}$ = 5V |
| Collector-emitter saturation voltage | $V_{CE(sat)}$ | - | - | 0.4 | V | $I_F$ = 20mA , $I_C$ = 1mA |
| Isolation resistance | $R_{IO}$ | $10^{11}$ | - | - | Ω | $V_{IO}$ = 500Vdc |
| Input-output capacitance | $C_{IO}$ | - | 0.6 | - | pF | $V_{IO}$ = 0, f = 1MHz |
| Rise time | $t_r$ | - | 4 | 18 | μs | $V_{CE}$ = 2V, $I_C$ = 2mA, $R_L$ = 100Ω |
| Fall time | $t_f$ | - | 5 | 18 | μs | |

* Typical values at $T_a$ = 25℃


Copyright © 2010, Everlight All Rights Reserved. Release Date : May 27, 2014. Issue No: DPC-0000082 Rev. 5

## Typical Electro-Optical Characteristics Curves

Figure 1. Forward Current vs Forward Voltage

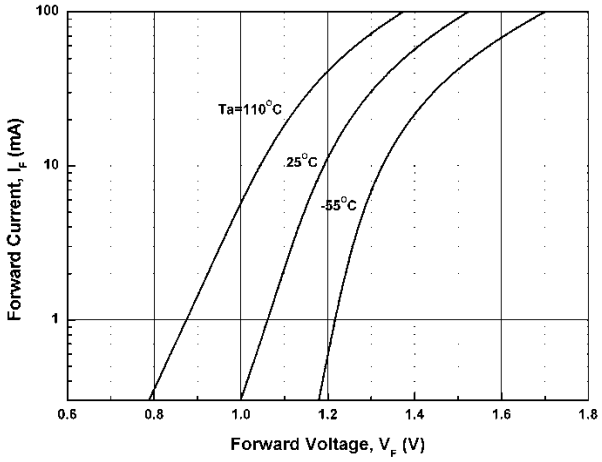


Figure 2. Current Transfer Ratio vs Forward Current

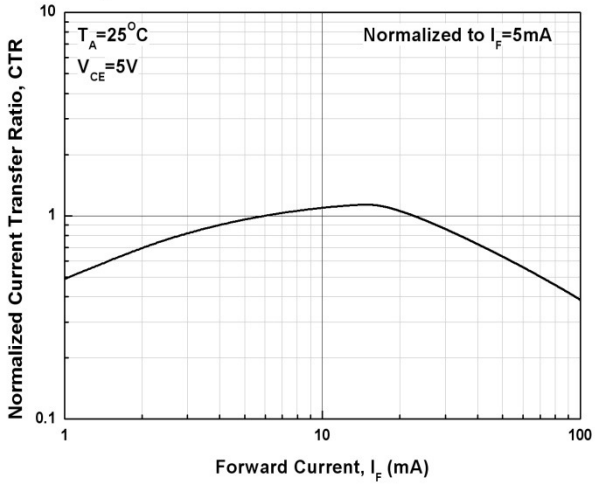


Figure 3. Collector Current vs Collector-emitter Voltage

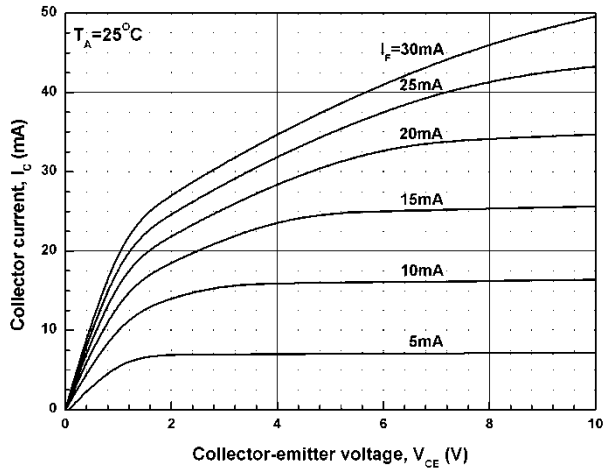


Figure 4. Relative Current Transfer Ratio vs Ambient Temperature

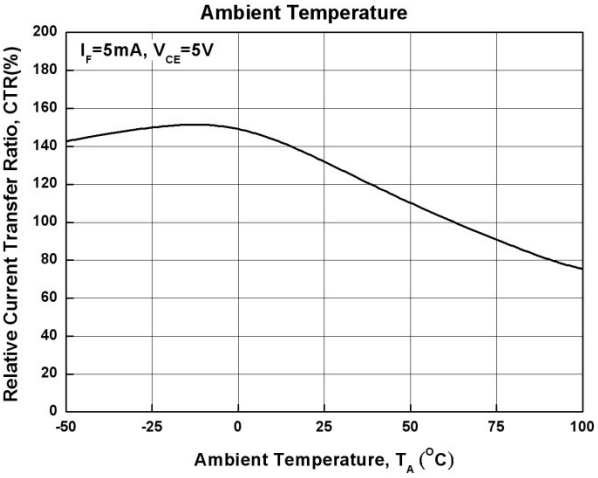


Figure 5. Collector-emitter Saturation Voltage vs Ambient Temperature

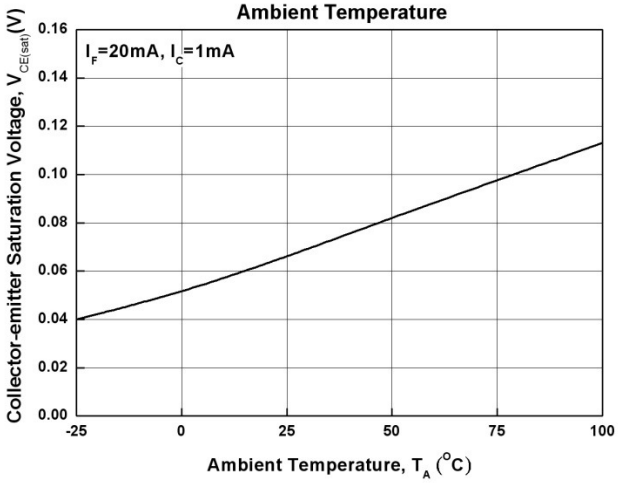


Figure 6. Dark Current vs Ambient Temperature

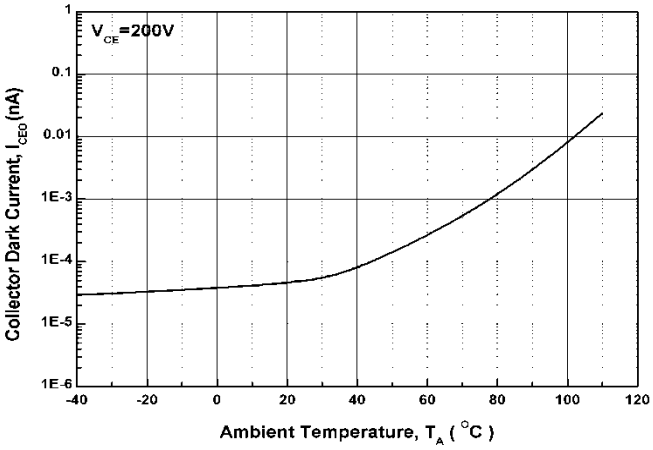



Copyright © 2010, Everlight All Rights Reserved. Release Date : May 27, 2014. Issue No: DPC-0000082 Rev. 5

Figure .7 Switching Time vs. Load Resistance

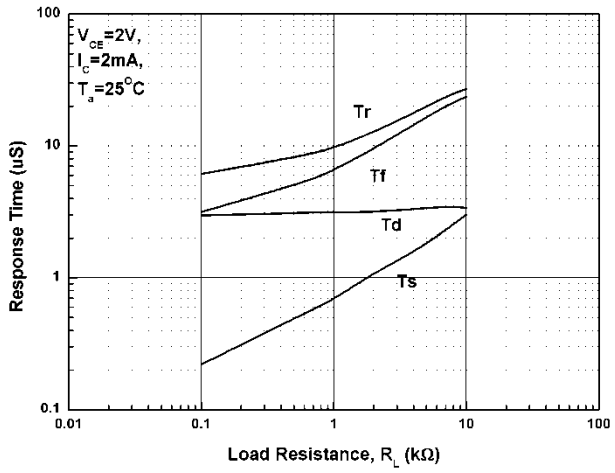


Figure 8. Collector-emitter Saturation Voltage vs Forward Current

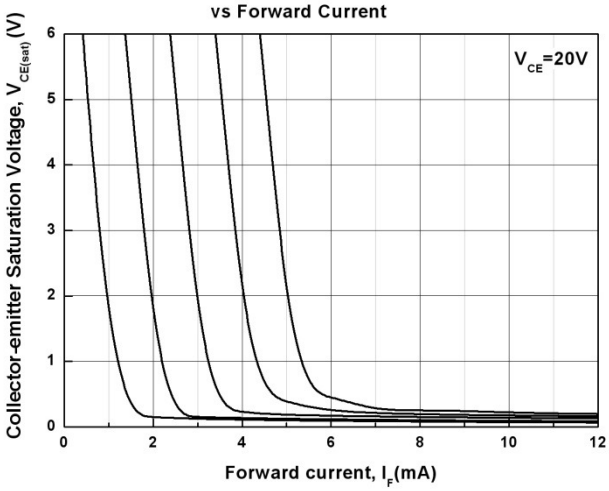


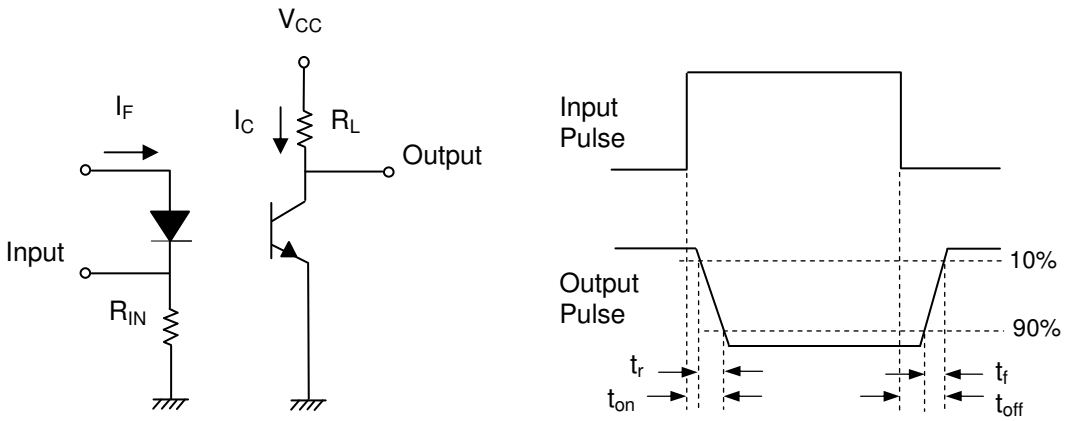


**Figure 9. Switching Time Test Circuit & Waveforms**


Copyright © 2010, Everlight All Rights Reserved. Release Date : May 27, 2014. Issue No: DPC-0000082 Rev. 5

## Order Information

### Part Number

# EL851X(Z)-V

**Note**

X = Lead form option (S, S1, M or none)
Z = Tape and reel option (TA, TB, TU, TD or none).
V = VDE safety (optional).

| Option | Description | Packing quantity |
|---|---|---|
| None | Standard DIP-4 | 100 units per tube |
| M | Wide lead bend (0.4 inch spacing) | 100 units per tube |
| S (TA) | Surface mount lead form + TA tape & reel option | 1000 units per reel |
| S (TB) | Surface mount lead form + TB tape & reel option | 1000 units per reel |
| S1 (TA) | Surface mount lead form (low profile) + TA tape & reel option | 1000 units per reel |
| S1 (TB) | Surface mount lead form (low profile) + TB tape & reel option | 1000 units per reel |
| S (TU) | Surface mount lead form + TU tape & reel option | 1500 units per reel |
| S (TD) | Surface mount lead form + TD tape & reel option | 1500 units per reel |
| S1 (TU) | Surface mount lead form (low profile) + TU tape & reel option | 1500 units per reel |
| S1 (TD) | Surface mount lead form (low profile) + TD tape & reel option | 1500 units per reel |


Copyright © 2010, Everlight All Rights Reserved. Release Date : May 27, 2014. Issue No: DPC-0000082 Rev. 5

## Package Dimension (Dimensions in mm)

### Standard DIP Type

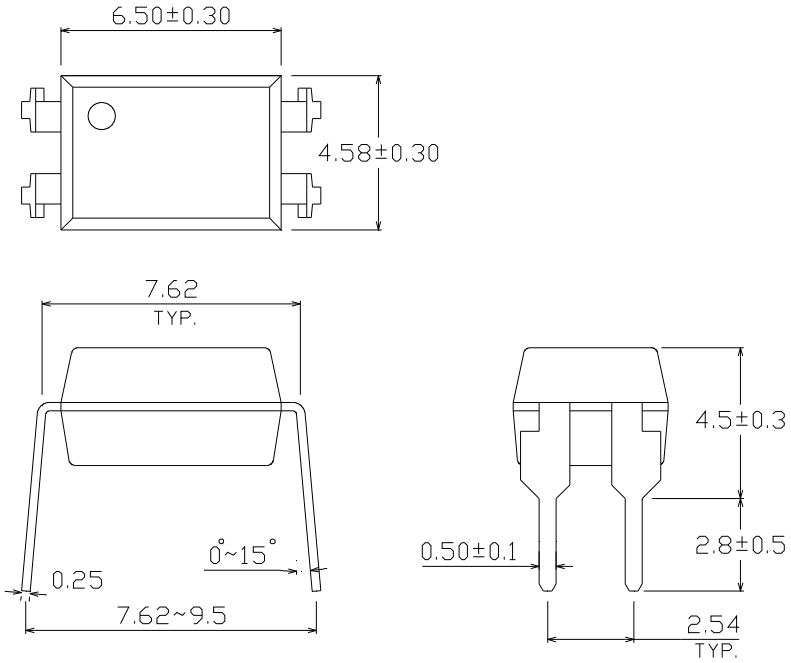


### Option M Type

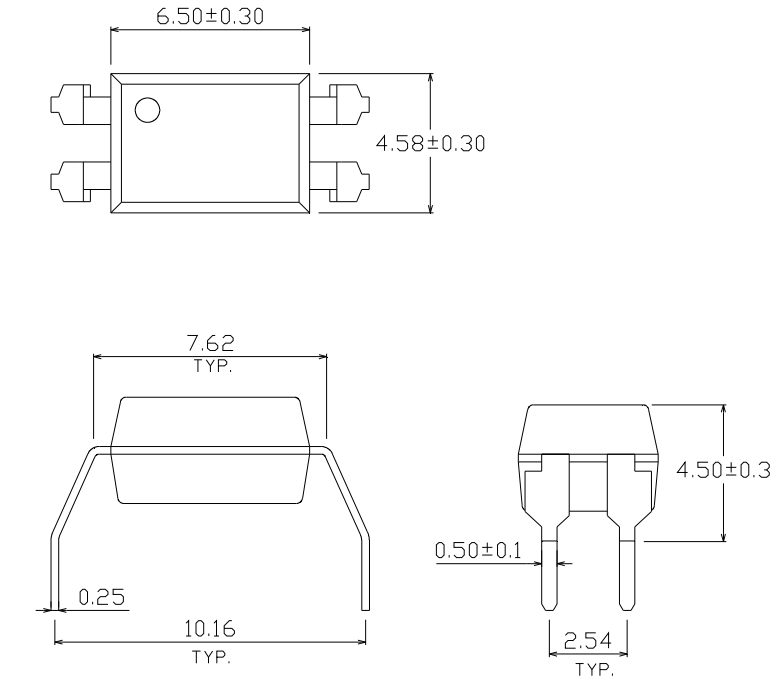



Copyright © 2010, Everlight All Rights Reserved. Release Date : May 27, 2014. Issue No: DPC-0000082 Rev. 5

## Option S Type

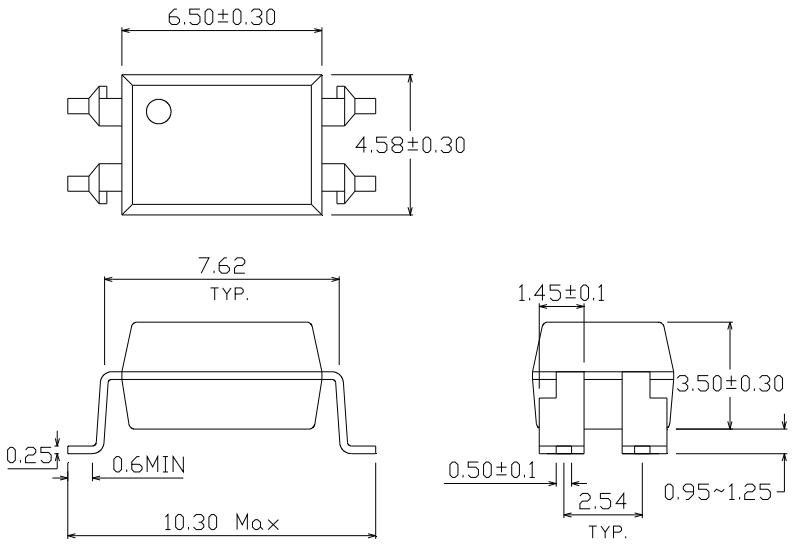


## Option S1 Type

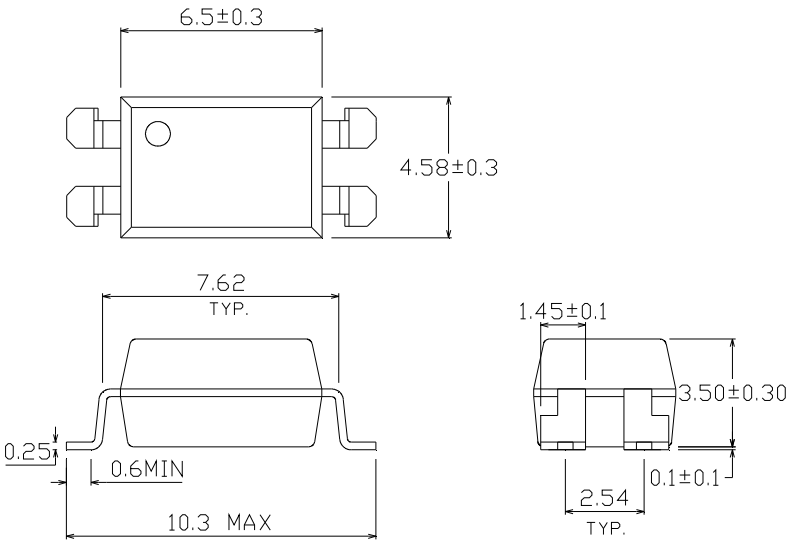



Copyright © 2010, Everlight All Rights Reserved. Release Date : May 27, 2014. Issue No: DPC-0000082 Rev. 5

## Recommended pad layout for surface mount leadform

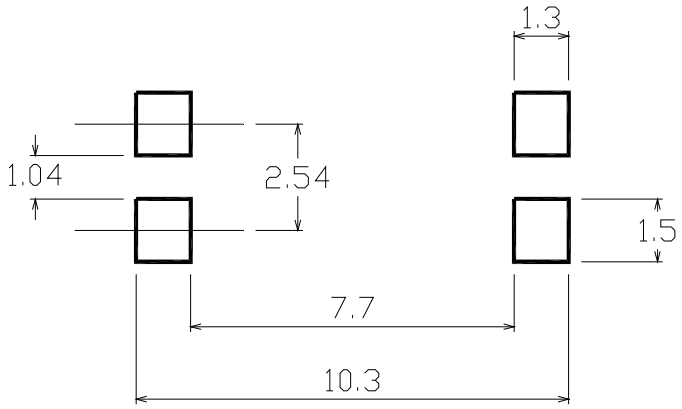


## Device Marking




**Notes**

| | |
|---|---|
| EL | denotes EVERLIGHT |
| 851 | denotes Device Number |
| Y | denotes 1 digit Year code |
| WW | denotes 2 digit Week code |
| V | denotes VDE (optional) |


Copyright © 2010, Everlight All Rights Reserved. Release Date : May 27, 2014. Issue No: DPC-0000082 Rev. 5

## Tape & Reel Packing Specifications

**Option TA**

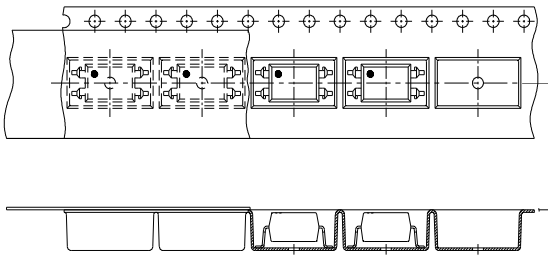

Direction of feed from reel

**Option TB**

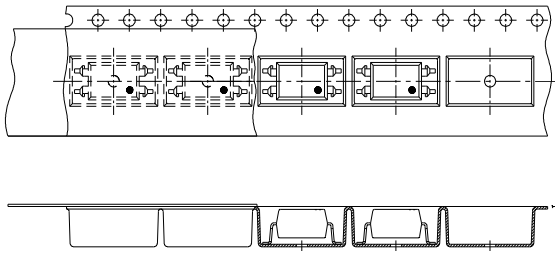

Direction of feed from reel

## Tape dimensions

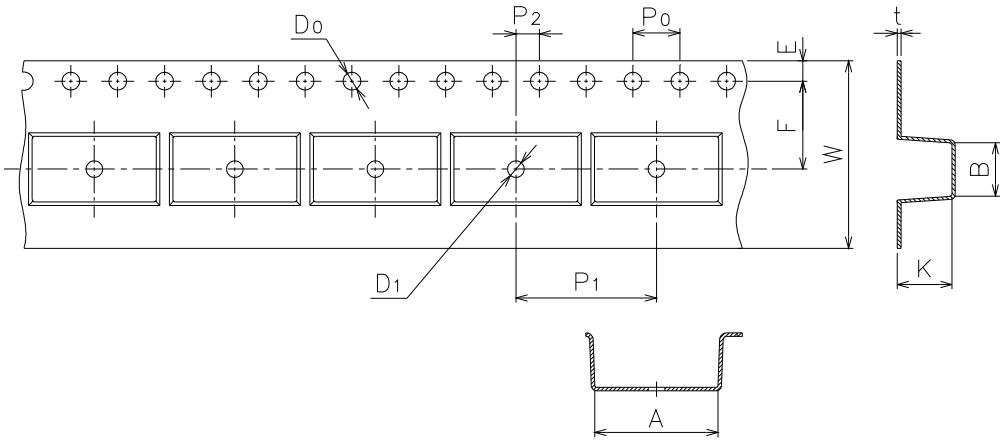


| Dimension No. | A | B | Do | D1 | E | F |
|---|---|---|---|---|---|---|
| Dimension (mm) S | 10.5±0.1 | 4.65±0.1 | 1.5±0.1 | 1.50±0.1 | 1.75±0.1 | 7.5±0.1 |
| Dimension (mm) S1 | 10.5±0.1 | 4.65±0.1 | 1.5±0.1 | 1.50±0.1 | 1.75±0.1 | 7.5±0.1 |
| Dimension No. | Po | P1 | P2 | t | W | K |
| Dimension (mm) S | 4.0±0.1 | 12.0±0.1 | 2.0±0.1 | 0.4±0.1 | 16.0±0.3 | 5.05±0.1 |
| Dimension (mm) S1 | 4.0±0.1 | 12.0±0.1 | 2.0±0.1 | 0.4±0.1 | 16.0±0.3 | 4.75±0.1 |


Copyright © 2010, Everlight All Rights Reserved. Release Date : May 27, 2014. Issue No: DPC-0000082 Rev. 5

## Tape & Reel Packing Specifications

**Option TD**

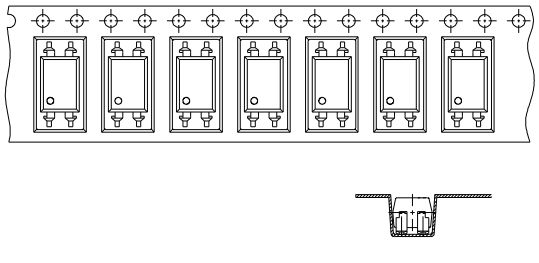

Direction of feed from reel

**Option TU**

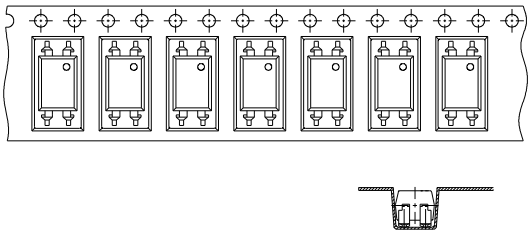

Direction of feed from reel

## Tape dimensions

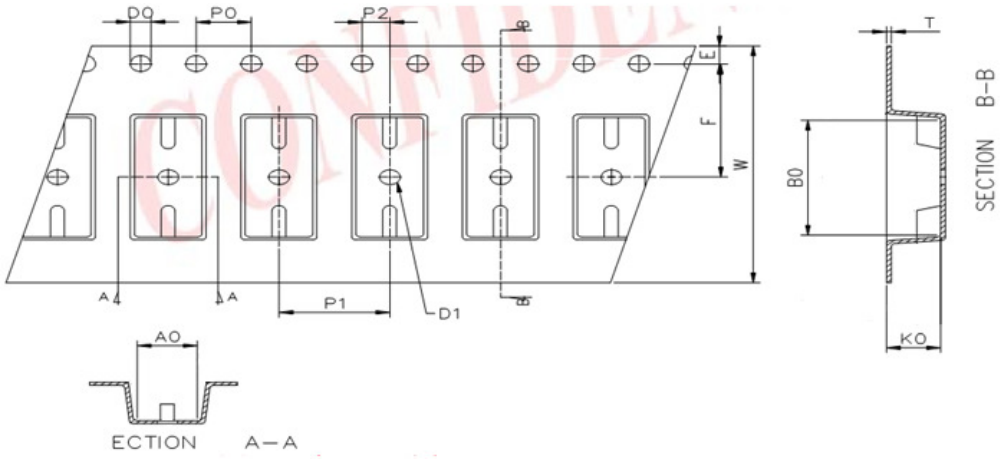


| Dimension No. | **Ao** | **Bo** | **Do** | **D1** | **E** | **F** |
|---|---|---|---|---|---|---|
| Dimension (mm) | 4.90±0.1 | 10.40±0.1 | 1.5±0.1 | 1.50±0.1 | 1.75±0.1 | 7.50±0.1 |
| Dimension No. | **Po** | **P1** | **P2** | **t** | **W** | **Ko** |
| Dimension(mm) | 4.00±0.1 | 8.00±0. | 2.00±0.1 | 0.40±0.1 | 16.00±0.3 | 4.60±0.1 |


Copyright © 2010, Everlight All Rights Reserved. Release Date : May 27, 2014. Issue No: DPC-0000082 Rev. 5

## Precautions for Use

1. Soldering Condition

1.1 (A) Maximum Body Case Temperature Profile for evaluation of Reflow Profile

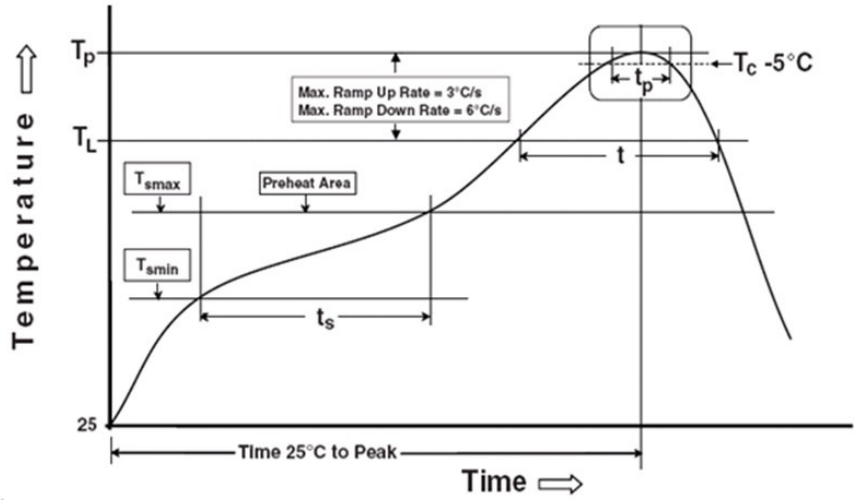


Note: Reference: IPC/JEDEC J-STD-020D

| | |
|---|---|
| **Preheat** | |
| Temperature min ($T_{smin}$) | 150 ℃ |
| Temperature max ($T_{smax}$) | 200℃ |
| Time ($T_{smin}$ to $T_{smax}$) ($t_s$) | 60-120 seconds |
| Average ramp-up rate ($T_{smax}$ to $T_p$) | 3 ℃/second max |
| **Other** | |
| Liquidus Temperature ($T_L$) | 217 ℃ |
| Time above Liquidus Temperature ($t_L$) | 60-100 sec |
| Peak Temperature ($T_P$) | 260℃ |
| Time within 5 ℃ of Actual Peak Temperature: $T_P$ - 5℃ | 30 s |
| Ramp- Down Rate from Peak Temperature | 6℃ /second max. |
| Time 25℃ to peak temperature | 8 minutes max. |
| Reflow times | 3 times |

.


Copyright © 2010, Everlight All Rights Reserved. Release Date : May 27, 2014. Issue No: DPC-0000082 Rev. 5

## DISCLAIMER

1. Above specification may be changed without notice. EVERLIGHT will reserve authority on material change for above specification.
2. When using this product, please observe the absolute maximum ratings and the instructions for using outlined in these specification sheets. EVERLIGHT assumes no responsibility for any damage resulting from use of the product which does not comply with the absolute maximum ratings and the instructions included in these specification sheets.
3. These specification sheets include materials protected under copyright of EVERLIGHT corporation. Please don't reproduce or cause anyone to reproduce them without EVERLIGHT's consent.


Copyright © 2010, Everlight All Rights Reserved. Release Date : May 27, 2014. Issue No: DPC-0000082 Rev. 5