Data Sheet | May 7, 2007 | FN7387.9

200MHz Low-Power Current Feedback Amplifiers

The EL5160, EL5161, EL5260, EL5261, and EL5360 are current feedback amplifiers with a bandwidth of 200MHz and operate from just 0.75mA supply current. This makes these amplifiers ideal for today's high speed video and monitor applications.

With the ability to run from a single supply voltage from 5V to 10V, these amplifiers are ideal for handheld, portable, or battery-powered equipment.

The EL5160 also incorporates an enable and disable function to reduce the supply current to 14µA typical per amplifier. Allowing the $\overline{CE}$ pin to float or applying a low logic level will enable the amplifier.

The EL5160 is available in the 6 Ld SOT-23 and 8 Ld SOIC packages, the EL5161 in 5 Ld SOT-23 and SC-70 packages, the EL5260 in the 10 Ld MSOP package, the EL5261 in 8 Ld SOIC and MSOP packages, the EL5360 in 16 Ld SOIC and QSOP packages. All operate over the industrial temperature range of -40°C to +85°C.

Features

- 200MHz -3dB bandwidth
- 0.75mA supply current
- 1700V/µs slew rate
- Single and dual supply operation, from 5V to 10V supply span
- Fast enable/disable (EL5160, EL5260 and EL5360 only)
- Available in SOT-23 packages
- Pb-Free plus anneal available (RoHS compliant)

Applications

- Battery-powered equipment
- Handheld, portable devices
- Video amplifiers
- Cable drivers
- RGB amplifiers
- Test equipment
- Instrumentation
- Current-to-voltage converters

Pinouts

EL5160
(8 LD SOIC)
TOP VIEW

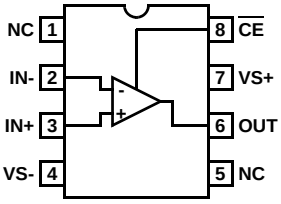

EL5160
(6 LD SOT-23)
TOP VIEW

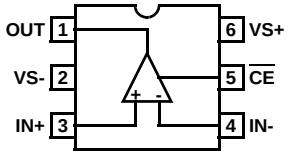

EL5161
(5 LD SOT-23, SC-70)
TOP VIEW

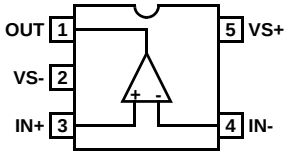

EL5260
(10 LD MSOP)
TOP VIEW

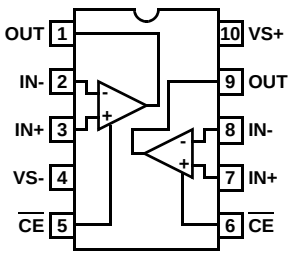

EL5261
(8 LD SOIC, MSOP)
TOP VIEW

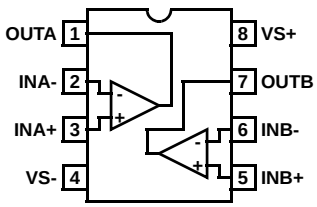

EL5360
(16 LD SOIC, QSOP)
TOP VIEW

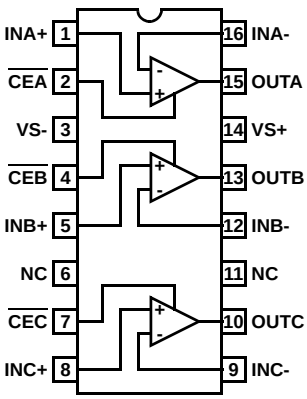

CAUTION: These devices are sensitive to electrostatic discharge; follow proper IC Handling Procedures.
1-888-INTERSIL or 1-888-468-3774 | Intersil (and design) is a registered trademark of Intersil Americas Inc.
Copyright Intersil Americas Inc. 2004, 2005, 2007. All Rights Reserved
All other trademarks mentioned are the property of their respective owners.

Ordering Information

PART NUMBER	PART MARKING	TAPE & REEL	PACKAGE	PKG. DWG. #
EL5160IS	5160IS	-	8 Ld SOIC (150 mil)	MDP0027
EL5160IS-T7	5160IS	7”	8 Ld SOIC (150 mil)	MDP0027
EL5160IS-T13	5160IS	13”	8 Ld SOIC (150 mil)	MDP0027
EL5160ISZ (Note)	5160ISZ	-	8 Ld SOIC (150 mil) (Pb-Free)	MDP0027
EL5160ISZ-T7 (Note)	5160ISZ	7”	8 Ld SOIC (150 mil) (Pb-Free)	MDP0027
EL5160ISZ-T13 (Note)	5160ISZ	13”	8 Ld SOIC (150 mil) (Pb-Free)	MDP0027
EL5160IW-T7	m	7” (3k pcs)	6 Ld SOT-23	MDP0038
EL5160IW-T7A	m	7” (250 pcs)	6 Ld SOT-23	MDP0038
EL5160IWZ-T7 (Note)	BAAN	7” (3k pcs)	6 Ld SOT-23 (Pb-Free)	MDP0038
EL5160IWZ-T7A (Note)	BAAN	7” (250 pcs)	6 Ld SOT-23 (Pb-Free)	MDP0038
EL5161IW-T7	e	7” (3k pcs)	5 Ld SOT-23	MDP0038
EL5161IW-T7A	e	7” (250 pcs)	5 Ld SOT-23	MDP0038
EL5161IWZ-T7 (Note)	BAJA	7” (3k pcs)	5 Ld SOT-23 (Pb-Free)	MDP0038
EL5161IWZ-T7A (Note)	BAJA	7” (250 pcs)	5 Ld SOT-23 (Pb-Free)	MDP0038
EL5161IC-T7	D	7” (3k pcs)	5 Ld SC-70 (1.25mm)	P5.049
EL5161IC-T7A	D	7” (250 pcs)	5 Ld SC-70 (1.25mm)	P5.049
EL5260IY	BNAAA	-	10 Ld MSOP (3.0mm)	MDP0043
EL5260IY-T7	BNAAA	7”	10 Ld MSOP (3.0mm)	MDP0043
EL5260IY-T13	BNAAA	13”	10 Ld MSOP (3.0mm)	MDP0043
EL5260IYZ (Note)	BAAAK	-	10 Ld MSOP (3.0mm) (Pb-free)	MDP0043
EL5260IYZ-T7 (Note)	BAAAK	7”	10 Ld MSOP (3.0mm) (Pb-free)	MDP0043
EL5260IYZ-T13 (Note)	BAAAK	13”	10 Ld MSOP (3.0mm) (Pb-free)	MDP0043
EL5261IY	BKAAA	-	8 Ld MSOP (3.0mm)	MDP0043
EL5261IY-T7	BKAAA	7”	8 Ld MSOP (3.0mm)	MDP0043
EL5261IY-T13	BKAAA	13”	8 Ld MSOP (3.0mm)	MDP0043
EL5261IS	5261IS	-	8 Ld SOIC (150 mil)	MDP0027
EL5261IS-T7	5261IS	7”	8 Ld SOIC (150 mil)	MDP0027
EL5261IS-T13	5261IS	13”	8 Ld SOIC (150 mil)	MDP0027
EL5261ISZ (Note)	5261ISZ	-	8 Ld SOIC (150 mil) (Pb-free)	MDP0027
EL5261ISZ-T7 (Note)	5261ISZ	7”	8 Ld SOIC (150 mil) (Pb-free)	MDP0027
EL5261ISZ-T13 (Note)	5261ISZ	13”	8 Ld SOIC (150 mil) (Pb-free)	MDP0027
EL5360IS	EL5360IS	-	16 Ld SOIC (150 mil)	MDP0027
EL5360IS-T7	EL5360IS	7”	16 Ld SOIC (150 mil)	MDP0027
EL5360IS-T13	EL5360IS	13”	16 Ld SOIC (150 mil)	MDP0027
EL5360ISZ (Note)	EL5360ISZ	-	16 Ld SOIC (150 mil) (Pb-Free)	MDP0027
EL5360ISZ-T7 (Note)	EL5360ISZ	7”	16 Ld SOIC (150 mil) (Pb-Free)	MDP0027
EL5360ISZ-T13 (Note)	EL5360ISZ	13”	16 Ld SOIC (150 mil) (Pb-Free)	MDP0027
EL5360IU	5360IU	-	16 Ld QSOP (150 mil)	MDP0040
EL5360IU-T7	5360IU	7”	16 Ld QSOP (150 mil)	MDP0040

Ordering Information (Continued)

PART NUMBER	PART MARKING	TAPE & REEL	PACKAGE	PKG. DWG. #
EL5360IU-T13	5360IU	13”	16 Ld QSOP (150 mil)	MDP0040
EL5360IUZ (Note)	5360IUZ	-	16 Ld QSOP (150 mil) (Pb-Free)	MDP0040
EL5360IUZ-T7 (Note)	5360IUZ	7”	16 Ld QSOP (150 mil) (Pb-Free)	MDP0040
EL5360IUZ-T13 (Note)	5360IUZ	13”	16 Ld QSOP (150 mil) (Pb-Free)	MDP0040

NOTE: Intersil Pb-free plus anneal products employ special Pb-free material sets; molding compounds/die attach materials and 100% matte tin plate termination finish, which are RoHS compliant and compatible with both SnPb and Pb-free soldering operations. Intersil Pb-free products are MSL classified at Pb-free peak reflow temperatures that meet or exceed the Pb-free requirements of IPC/JEDEC J STD-020.

Absolute Maximum Ratings (T_A = +25°C)

Supply Voltage between V_S+ and V_S- 13.2V
Maximum Continuous Output Current 50mA
Slew Rate of V_S+ to V_S- 1V/µs
Pin Voltages . . . . . V_S- - 0.5V to V_S+ + 0.5V

Thermal Information

Operating Junction Temperature . . . . . +125°C
Power Dissipation . . . . . See Curves
Storage Temperature . . . . . -65°C to +150°C
Ambient Operating Temperature . . . . . -40°C to +85°C
Pb-free reflow profile . . . . . .see link below
http://www.intersil.com/pbfree/Pb-FreeReflow.asp

CAUTION: Stresses above those listed in "Absolute Maximum Ratings" may cause permanent damage to the device. This is a stress only rating and operation of the device at these or any other conditions above those indicated in the operational sections of this specification is not implied.

IMPORTANT NOTE: All parameters having Min/Max specifications are guaranteed. Typical values are for information purposes only. Unless otherwise noted, all tests are at the specified temperature and are pulsed tests, therefore: $T_J = T_C = T_A$

Electrical Specifications

V_S+ = +5V, V_S- = -5V, R_F = 750Ω for A_V = 1, R_L = 150Ω, $V_{CE,H} = V_S$+, $V_{CE,L} = (V_S$+) -3V, T_A = +25°C, Unless Otherwise Specified.

PARAMETER	DESCRIPTION	CONDITIONS	MIN	TYP	MAX	UNIT
AC PERFORMANCE						
BW	-3dB Bandwidth	A_V = +1, R_L = 500Ω		200		MHz
		A_V = +2, R_L = 150Ω		125		MHz
BW1	0.1dB Bandwidth	R_L = 100Ω		10		MHz
SR	Slew Rate	V_O = -2.5V to +2.5V, A_V = +2, $R_F = R_G$ = 1kΩ, R_L = 100Ω	900	1700	2500	V/µs
		EL5260, EL5261	800	1300	2500	V/µs
SR	500Ω Load			1360		V/µs
t_S	0.1% Settling Time	V_{OUT} = -2.5V to +2.5V, A_V = +2		35		ns
e_N	Input Voltage Noise			4		nV/√Hz
i_N-	IN- Input Current Noise			7		pA/√Hz
i_N+	IN+ Input Current Noise			8		pA/√Hz
HD2		5MHz, 2.5V_{P-P}, R_L = 150Ω, A_V = +2		-74		dBc
HD3		5MHz, 2.5V_{P-P}, R_L = 150Ω, A_V = +2		-50		dBc
dG	Differential Gain Error (Note 1)	A_V = +2		0.1		%
dP	Differential Phase Error (Note 1)	A_V = +2		0.1		°
DC PERFORMANCE						
V_{OS}	Offset Voltage		-5	1.6	+5	mV
T_CV_{OS}	Input Offset Voltage Temperature Coefficient	Measured from T_{MIN} to T_{MAX}		6		µV/°C
R_{OL}	Transimpedance	±2.5V_{OUT} into 150Ω	800	2000		kΩ
INPUT CHARACTERISTICS						
CMIR	Common Mode Input Range	Guaranteed by CMRR test	±3	±3.3		V
CMRR	Common Mode Rejection Ratio	V_{IN} = ±3V	50	62	75	dB
-ICMR	- Input Current Common Mode Rejection		-1		+1	µA/V
+I_{IN}	+ Input Current		-4		+4	µA
-I_{IN}	- Input Current		-5		+5	µA
R_{IN}	Input Resistance		1.5	4	15	MΩ
C_{IN}	Input Capacitance			1		pF

Electrical Specifications $V_S+ = +5V$, $V_S- = -5V$, $R_F = 750\Omega$ for $A_V = 1$, $R_L = 150\Omega$, $V_{CE,H} = V_S+$, $V_{CE,L} = (V_S+) -3V$, $T_A = +25°C$, Unless Otherwise Specified. **(Continued)**

PARAMETER	DESCRIPTION	CONDITIONS	MIN	TYP	MAX	UNIT
OUTPUT CHARACTERISTICS						
V_O	Output Voltage Swing	$R_L = 150\Omega$ to GND	±3.1	±3.4	±3.8	V
		$R_L = 1k\Omega$ to GND	±3.8	±4.0	±4.2	V
I_{OUT}	Output Current	$R_L = 10\Omega$ to GND	40	70	140	mA
SUPPLY						
I_{SON}	Supply Current - Enabled, per Amplifier	No load, $V_{IN} = 0V$ (EL5160, EL5161, EL5260, EL5261)	0.6	0.75	0.85	mA
		No load, $V_{IN} = 0V$ (EL5360)	0.6	0.8	0.92	mA
$I_{SOFF}+$	Supply Current - Disabled, per Amplifier		0	10	25	µA
$I_{SOFF}-$	Supply Current - Disabled, per Amplifier	No load, $V_{IN} = 0V$	-25	-14	0	µA
PSRR	Power Supply Rejection Ratio	DC, $V_S = ±4.75V$ to ±5.25V	65	74		dB
-IPSR	- Input Current Power Supply Rejection	DC, $V_S = ±4.75V$ to ±5.25V	-0.5	0.1	0.5	µA/V
ENABLE (EL5160, EL5260, EL5360 ONLY)						
t_{EN}	Enable Time			600		ns
t_{DIS}	Disable Time			800		ns
$I_{CE,H}$	$\overline{CE}$ Pin Input High Current	$\overline{CE} = V_S+$	1	5	25	µA
$I_{CE,L}$	$\overline{CE}$ Pin Input Low Current	$\overline{CE} = (V_S+) - 5V$	-1	0	1	µA

NOTE:

1. Standard NTSC test, AC signal amplitude = $286mV_{P-P}$, f = 3.58MHz

Typical Performance Curves

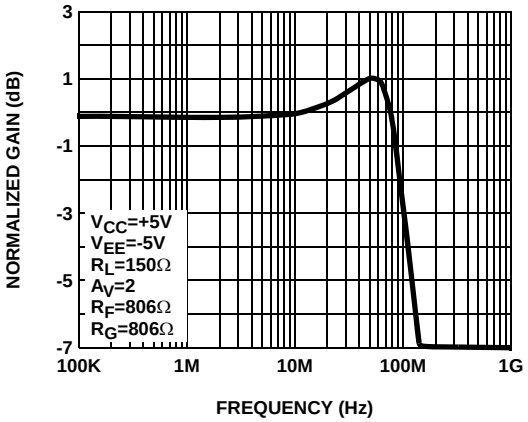

FIGURE 1. FREQUENCY RESPONSE

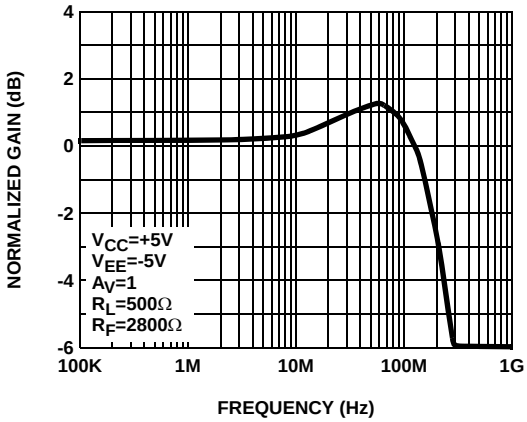

FIGURE 2. FREQUENCY RESPONSE

Typical Performance Curves (Continued)

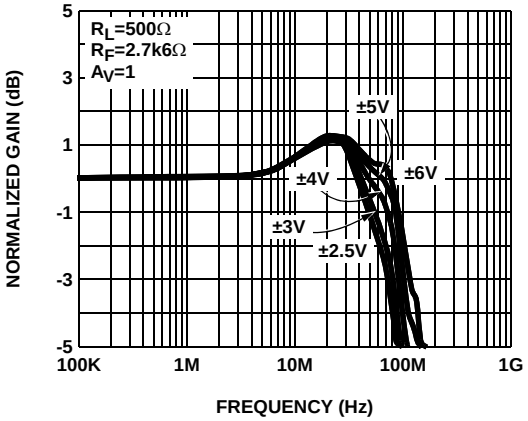

FIGURE 3. FREQUENCY RESPONSE FOR VARIOUS V_{CC}, V_{EE}

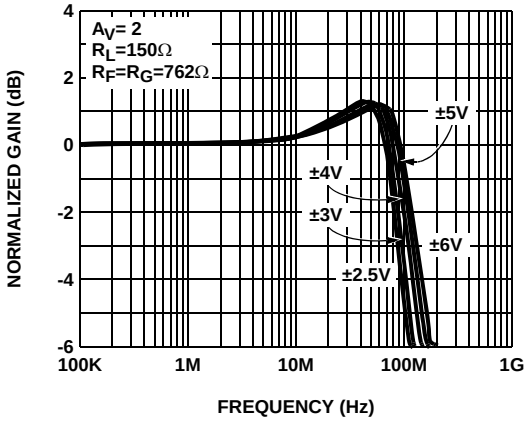

FIGURE 4. FREQUENCY RESPONSE FOR VARIOUS V_{CC}, V_{EE}

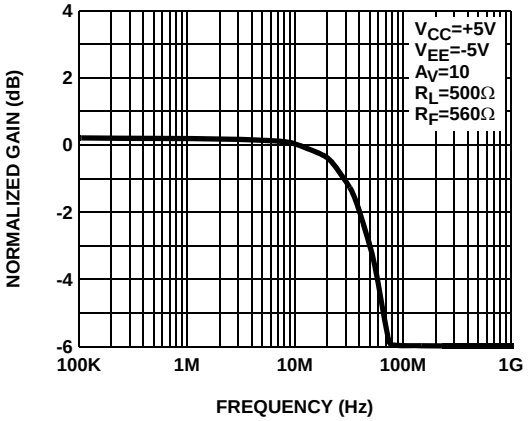

FIGURE 5. FREQUENCY RESPONSE

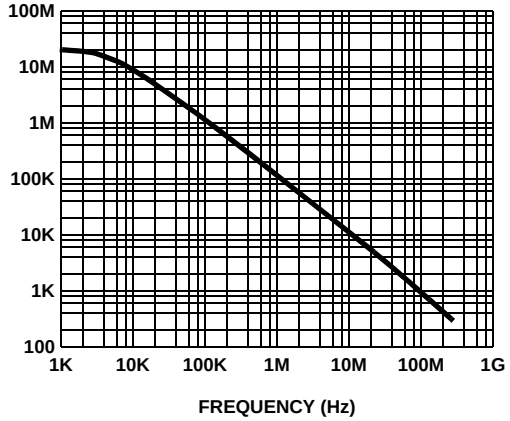

FIGURE 6. R_{OL}

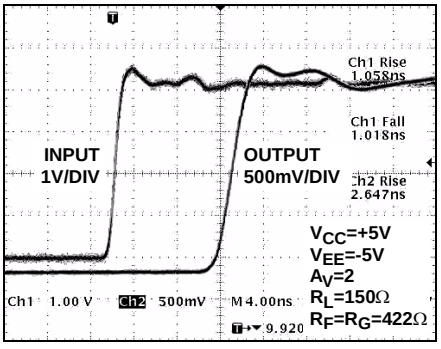

FIGURE 7. RISE TIME

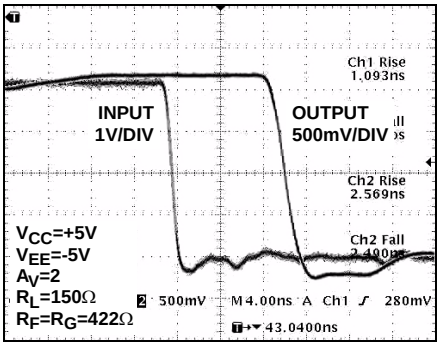

FIGURE 8. FALL TIME

Typical Performance Curves (Continued)

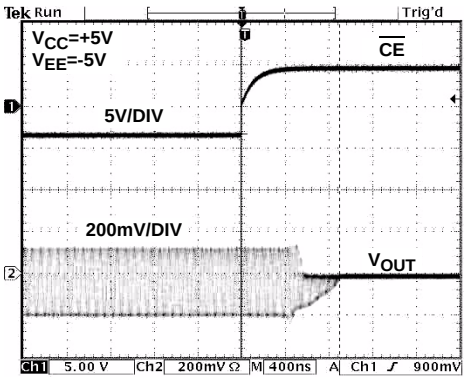

FIGURE 9. DISABLE DELAY TIME

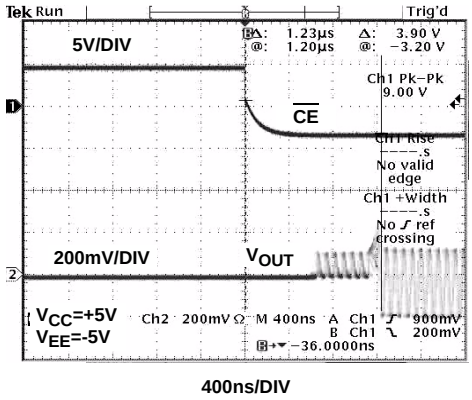

FIGURE 10. ENABLE DELAY TIME

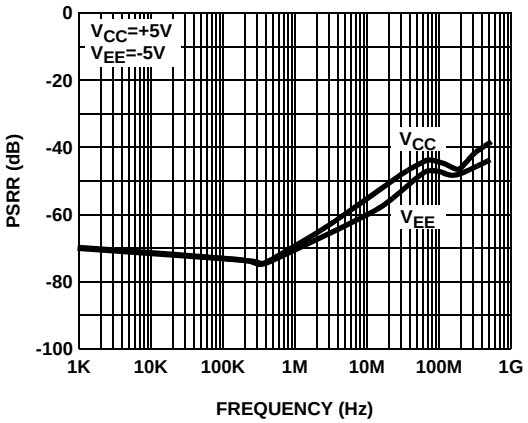

FIGURE 11. PSSR

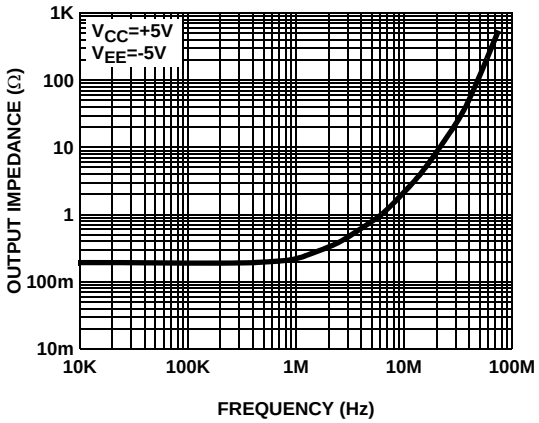

FIGURE 12. CLOSED LOOP OUTPUT IMPEDANCE

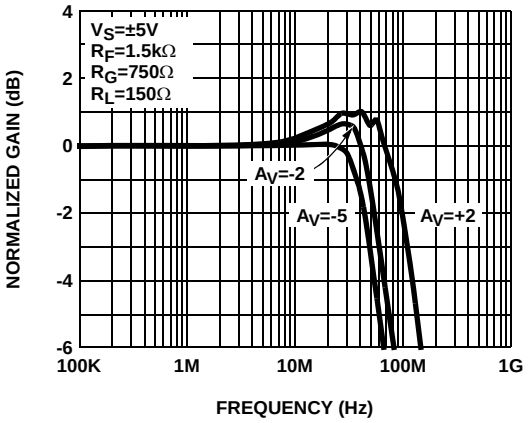

FIGURE 13. FREQUENCY RESPONSE FOR VARIOUS GAIN SETTINGS

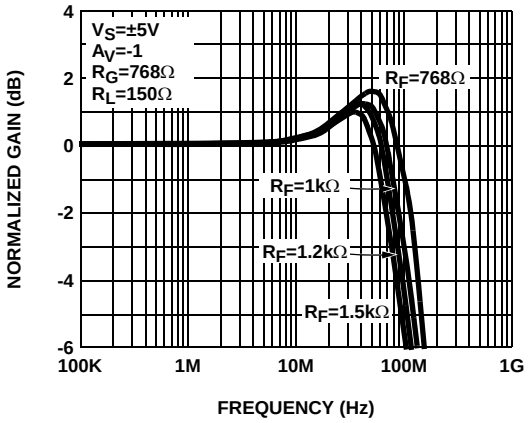

FIGURE 14. FREQUENCY RESPONSE FOR VARIOUS FEEDBACK RESISTORS, A_V=-1

Typical Performance Curves (Continued)

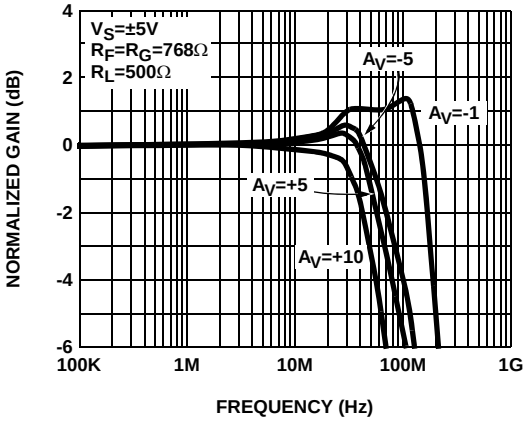

FIGURE 15. FREQUENCY RESPONSE FOR VARIOUS GAIN SETTINGS

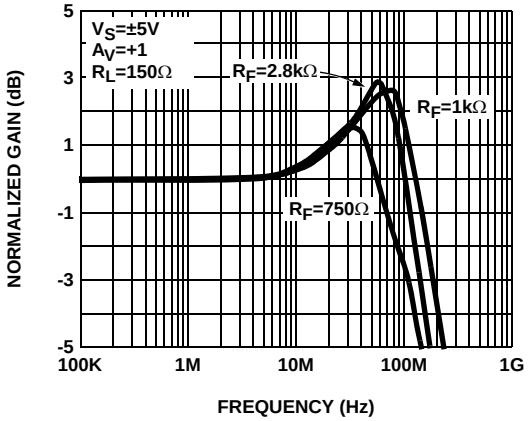

FIGURE 16. FREQUENCY RESPONSE FOR VARIOUS FEEDBACK RESISTORS, A_V=+1

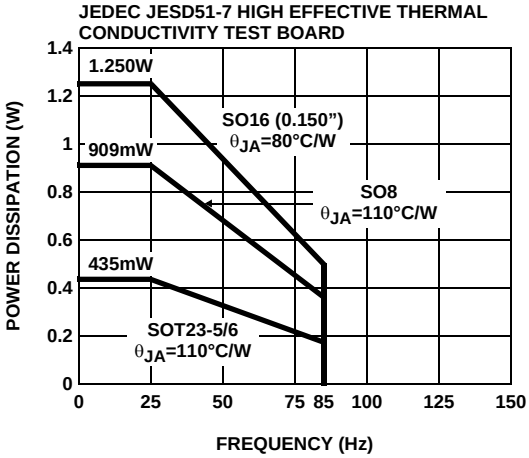

FIGURE 17. PACKAGE POWER DISSIPATION vs AMBIENT TEMPERATURE

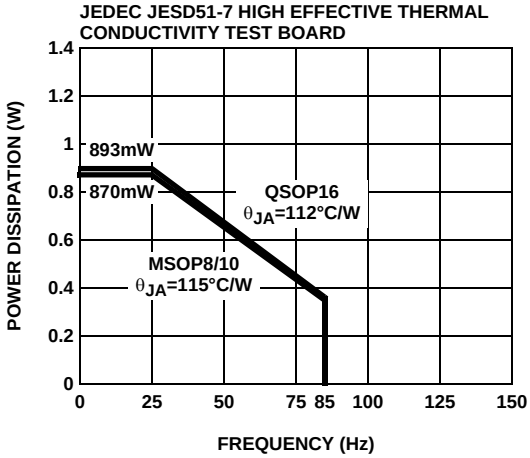

FIGURE 18. PACKAGE POWER DISSIPATION vs AMBIENT TEMPERATURE

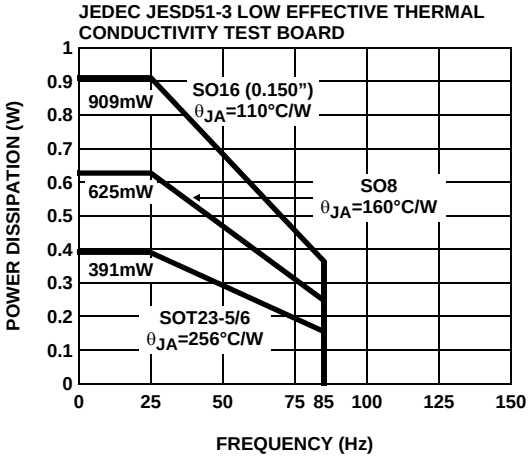

FIGURE 19. PACKAGE POWER DISSIPATION vs AMBIENT TEMPERATURE

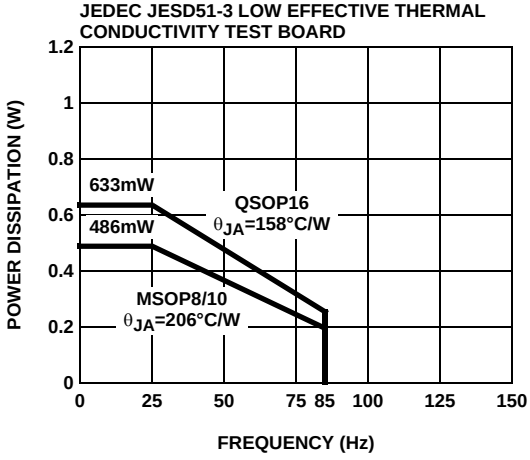

FIGURE 20. PACKAGE POWER DISSIPATION vs AMBIENT TEMPERATURE

Pin Descriptions

EL5160 (8 Ld SOIC)	EL5160 (6 Ld SOT-23)	EL5161 (5 Ld SOT-23)	PIN NAME	FUNCTION	EQUIVALENT CIRCUIT
1, 5			NC	Not connected	
2	4	4	IN-	Inverting input	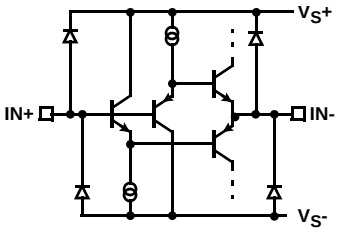 Circuit 1
3	3	3	IN+	Non-inverting input	(See circuit 1)
4	2	2	VS-	Negative supply	
6	1	1	OUT	Output	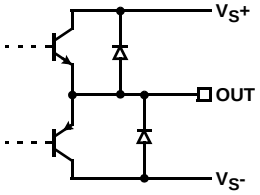 Circuit 2
7	6	5	VS+	Positive supply	
8	5		$\overline{CE}$	Chip enable	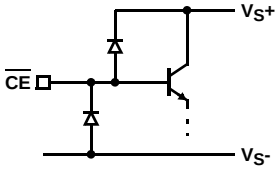 Circuit 3

Applications Information

Product Description

The EL5160, EL5161, EL5260, EL5261, and EL5360 are low power, current-feedback operational amplifiers that offer a wide -3dB bandwidth of 200MHz and a low supply current of 0.75mA per amplifier. The EL5160, EL5161, EL5260, EL5261, and EL5360 work with supply voltages ranging from a single 5V to 10V and they are also capable of swinging to within 1V of either supply on the output. Because of their current-feedback topology, the EL5160, EL5161, EL5260, EL5261, and EL5360 do not have the normal gain-bandwidth product associated with voltage-feedback operational amplifiers. Instead, their -3dB bandwidth to remain relatively constant as closed-loop gain is increased. This combination of high bandwidth and low power, together with aggressive pricing make the EL5160, EL5161, EL5260, EL5261, and EL5360 ideal choices for many low-power/high-bandwidth applications such as portable, handheld, or battery-powered equipment.

Power Supply Bypassing and Printed Circuit Board Layout

As with any high frequency device, good printed circuit board layout is necessary for optimum performance. Low impedance ground plane construction is essential. Surface mount components are recommended, but if leaded components are used, lead lengths should be as short as possible. The power supply pins must be well bypassed to reduce the risk of oscillation. The combination of a 4.7µF tantalum capacitor in parallel with a 0.01µF capacitor has been shown to work well when placed at each supply pin.

For good AC performance, parasitic capacitance should be kept to a minimum, especially at the inverting input. (See the Capacitance at the Inverting Input section) Even when ground plane construction is used, it should be removed from the area near the inverting input to minimize any stray capacitance at that node. Carbon or Metal-Film resistors are acceptable with the Metal-Film resistors giving slightly less peaking and bandwidth because of additional series inductance. Use of sockets, particularly for the SO package, should be avoided if possible. Sockets add parasitic inductance and capacitance which will result in additional peaking and overshoot.

Disable/Power-Down

The EL5160 amplifier can be disabled placing its output in a high impedance state. When disabled, the amplifier supply current is reduced to < 15µA. The EL5160 is disabled when its $\overline{CE}$ pin is pulled up to within 1V of the positive supply. Similarly, the amplifier is enabled by floating or pulling its $\overline{CE}$ pin to at least 3V below the positive supply. For ±5V supply, this means that an EL5160 amplifier will be enabled when $\overline{CE}$ is 2V or less, and disabled when $\overline{CE}$ is above 4V. Although the logic levels are not standard TTL, this choice of logic voltages allows the EL5160 to be enabled by tying $\overline{CE}$ to ground, even in 5V single supply applications. The $\overline{CE}$ pin can be driven from CMOS outputs.

Capacitance at the Inverting Input

Any manufacturer's high-speed voltage- or current-feedback amplifier can be affected by stray capacitance at the inverting input. For inverting gains, this parasitic capacitance has little effect because the inverting input is a virtual ground, but for non-inverting gains, this capacitance (in conjunction with the feedback and gain resistors) creates a pole in the feedback path of the amplifier. This pole, if low enough in frequency, has the same destabilizing effect as a zero in the forward open-loop response. The use of large-value feedback and gain resistors exacerbates the problem by further lowering the pole frequency (increasing the possibility of oscillation.)

The EL5160, EL5161, EL5260, EL5261, and EL5360 have been optimized with a TBDΩ feedback resistor. With the high bandwidth of these amplifiers, these resistor values might cause stability problems when combined with parasitic capacitance, thus ground plane is not recommended around the inverting input pin of the amplifier.

Feedback Resistor Values

The EL5160, EL5161, EL5260, EL5261, and EL5360 have been designed and specified at a gain of +2 with R_F approximately 806Ω. This value of feedback resistor gives 200MHz of -3dB bandwidth at A_V = 2 with TBDdB of peaking. With A_V = -2, an R_F of approximately TBDΩ gives 200MHz of bandwidth with 1dB of peaking. Since the EL5160, EL5161, EL5260, EL5261, and EL5360 are current-feedback amplifiers, it is also possible to change the value of R_F to get more bandwidth. As seen in the curve of Frequency Response for Various R_F and R_G, bandwidth and peaking can be easily modified by varying the value of the feedback resistor.

Because the EL5160, EL5161, EL5260, EL5261, and EL5360 are current-feedback amplifiers, their gain-bandwidth product is not a constant for different closed-loop gains. This feature actually allows the EL5160, EL5161, EL5260, EL5261, and EL5360 to maintain about the same -3dB bandwidth. As gain is increased, bandwidth decreases slightly while stability increases. Since the loop stability is improving with higher closed-loop gains, it becomes possible to reduce the value of R_F below the specified TBDΩ and still retain stability, resulting in only a slight loss of bandwidth with increased closed-loop gain.

Supply Voltage Range and Single-Supply Operation

The EL5160, EL5161, EL5260, EL5261, and EL5360 have been designed to operate with supply voltages having a span of greater than 5V and less than 10V. In practical terms, this means that they will operate on dual supplies ranging from ±2.5V to ±5V. With single-supply, the EL5160, EL5161, EL5260, EL5261, and EL5360 will operate from 5V to 10V.

As supply voltages continue to decrease, it becomes necessary to provide input and output voltage ranges that can get as close as possible to the supply voltages. The EL5160, EL5161, EL5260, EL5261, and EL5360 have an input range which extends to within 2V of either supply. So, for example, on +5V supplies, the EL5160, EL5161, EL5260, EL5261, and EL5360 have an input range which spans ±3V. The output range of the EL5160, EL5161, EL5260, EL5261, and EL5360 is also quite large, extending to within 1V of the supply rail. On a ±5V supply, the output is therefore capable of swinging from -4V to +4V. Single-supply output range is larger because of the increased negative swing due to the external pull-down resistor to ground.

Video Performance

For good video performance, an amplifier is required to maintain the same output impedance and the same frequency response as DC levels are changed at the output. This is especially difficult when driving a standard video load of 150Ω, because of the change in output current with DC level. Previously, good differential gain could only be achieved by running high idle currents through the output transistors (to reduce variations in output impedance.) These currents were typically comparable to the entire 1mA supply current of each EL5160, EL5161, EL5260, EL5261, and EL5360 amplifier. Special circuitry has been incorporated in the EL5160, EL5161, EL5260, EL5261, and EL5360 to reduce the variation of output impedance with current output. This results in dG and dP specifications of 0.1% and 0.1°, while driving 150Ω at a gain of 2.

Video performance has also been measured with a 500Ω load at a gain of +1. Under these conditions, the EL5160 has dG and dP specifications of 0.1% and 0.1°.

Output Drive Capability

In spite of their low 1mA of supply current, the EL5160, EL5161, EL5260, EL5261, and EL5360 are capable of providing a minimum of ±50mA of output current. With a minimum of ±50mA of output drive, the EL5160 is capable of driving 50Ω loads to both rails, making it an excellent choice for driving isolation transformers in telecommunications applications.

Driving Cables and Capacitive Loads

When used as a cable driver, double termination is always recommended for reflection-free performance. For those applications, the back-termination series resistor will decouple the EL5160, EL5161, EL5260, EL5261, and EL5360 from the cable and allow extensive capacitive drive. However, other applications may have high capacitive loads without a back-termination resistor. In these applications, a small series resistor (usually between 5Ω and 50Ω) can be placed in series with the output to eliminate most peaking. The gain resistor (R_G) can then be chosen to make up for any gain loss which may be created by this additional resistor at the output. In many cases it is also possible to simply increase the value of the feedback resistor (R_F) to reduce the peaking.

Current Limiting

The EL5160, EL5161, EL5260, EL5261, and EL5360 have no internal current-limiting circuitry. If the output is shorted, it is possible to exceed the Absolute Maximum Rating for output current or power dissipation, potentially resulting in the destruction of the device.

Power Dissipation

With the high output drive capability of the EL5160, EL5161, EL5260, EL5261, and EL5360, it is possible to exceed the +125°C Absolute Maximum junction temperature under certain very high load current conditions. Generally speaking when R_L falls below about 25Ω, it is important to calculate the maximum junction temperature (TJ_{MAX}) for the application to determine if power supply voltages, load conditions, or package type need to be modified for the EL5160, EL5161, EL5260, EL5261, and EL5360 to remain in the safe operating area. These parameters are calculated as follows:

$$T_{JMAX} = T_{MAX} + (\theta_{JA} \times n \times PD_{MAX})$$

where:

- T_{MAX} = Maximum ambient temperature
- θ_{JA} = Thermal resistance of the package
- n = Number of amplifiers in the package
- PD_{MAX} = Maximum power dissipation of each amplifier in the package

PD_{MAX} for each amplifier can be calculated as follows:

$$PD_{MAX} = (2 \times V_S \times I_{SMAX}) + \left[(V_S - V_{OUTMAX}) \times \frac{V_{OUTMAX}}{R_L}\right]$$

where:

- V_S = Supply voltage
- I_{SMAX} = Maximum supply current of 0.75mA
- V_{OUTMAX} = Maximum output voltage (required)
- R_L = Load resistance

Typical Application Circuits

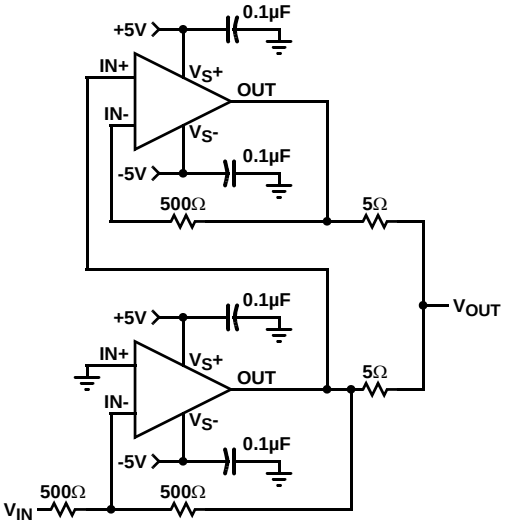

FIGURE 21. INVERTING 200mA OUTPUT CURRENT DISTRIBUTION AMPLIFIER

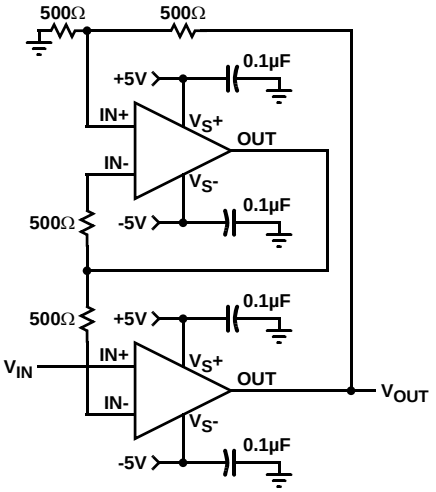

FIGURE 22. FAST-SETTLING PRECISION AMPLIFIER

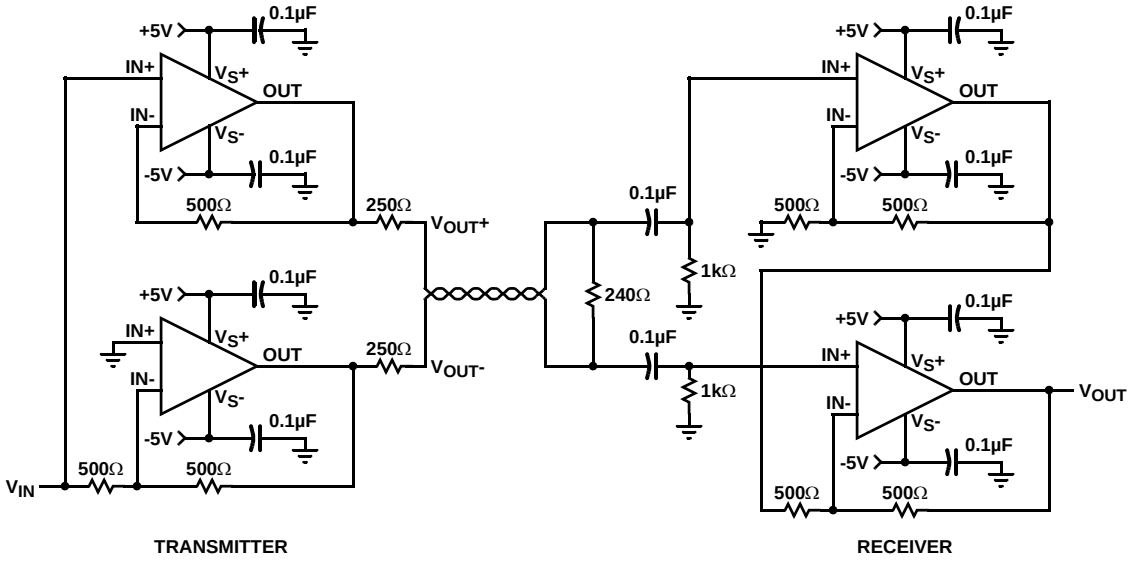

FIGURE 23. DIFFERENTIAL LINE DRIVER/RECEIVER

Small Outline Package Family (SO)

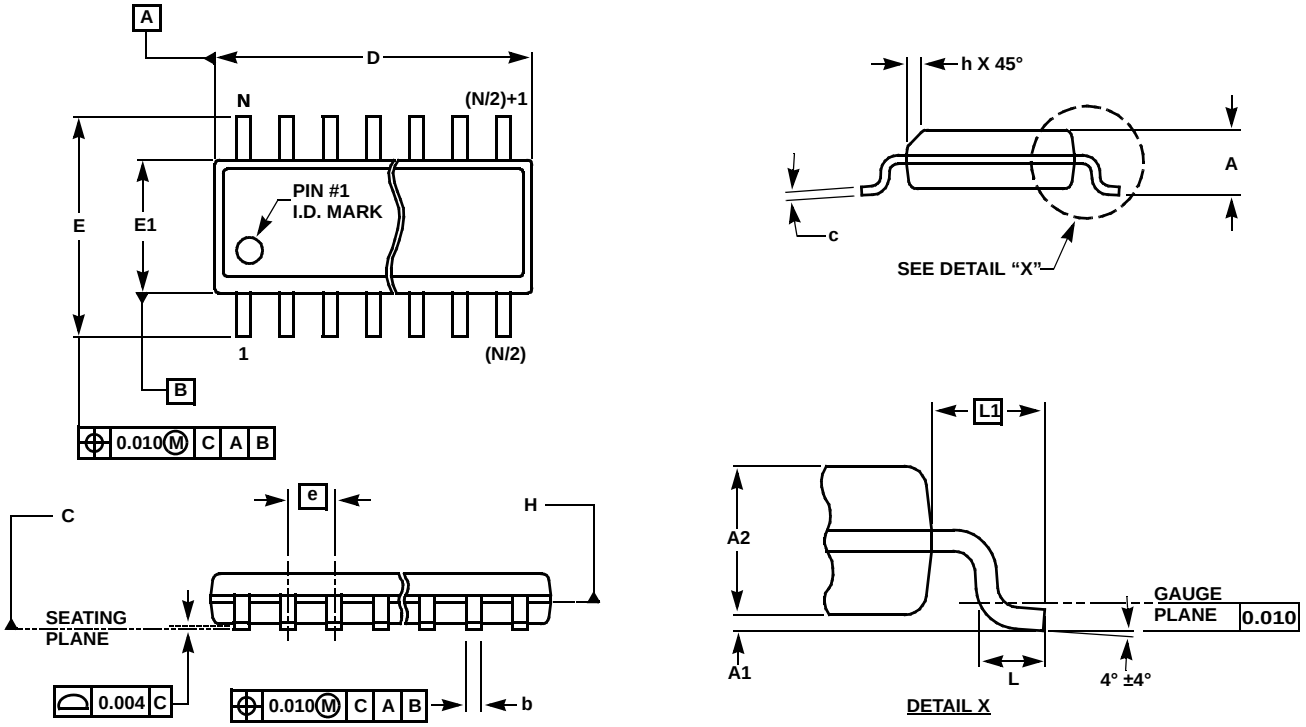

MDP0027

SMALL OUTLINE PACKAGE FAMILY (SO)

SYMBOL	INCHES							TOLERANCE	NOTES
	SO-8	SO-14	SO16 (0.150")	SO16 (0.300") (SOL-16)	SO20 (SOL-20)	SO24 (SOL-24)	SO28 (SOL-28)		
A	0.068	0.068	0.068	0.104	0.104	0.104	0.104	MAX	-
A1	0.006	0.006	0.006	0.007	0.007	0.007	0.007	±0.003	-
A2	0.057	0.057	0.057	0.092	0.092	0.092	0.092	±0.002	-
b	0.017	0.017	0.017	0.017	0.017	0.017	0.017	±0.003	-
c	0.009	0.009	0.009	0.011	0.011	0.011	0.011	±0.001	-
D	0.193	0.341	0.390	0.406	0.504	0.606	0.704	±0.004	1, 3
E	0.236	0.236	0.236	0.406	0.406	0.406	0.406	±0.008	-
E1	0.154	0.154	0.154	0.295	0.295	0.295	0.295	±0.004	2, 3
e	0.050	0.050	0.050	0.050	0.050	0.050	0.050	Basic	-
L	0.025	0.025	0.025	0.030	0.030	0.030	0.030	±0.009	-
L1	0.041	0.041	0.041	0.056	0.056	0.056	0.056	Basic	-
h	0.013	0.013	0.013	0.020	0.020	0.020	0.020	Reference	-
N	8	14	16	16	20	24	28	Reference	-

Rev. M 2/07

NOTES:

1. Plastic or metal protrusions of 0.006" maximum per side are not included.
2. Plastic interlead protrusions of 0.010" maximum per side are not included.
3. Dimensions "D" and "E1" are measured at Datum Plane "H".
4. Dimensioning and tolerancing per ASME Y14.5M-1994

SOT-23 Package Family

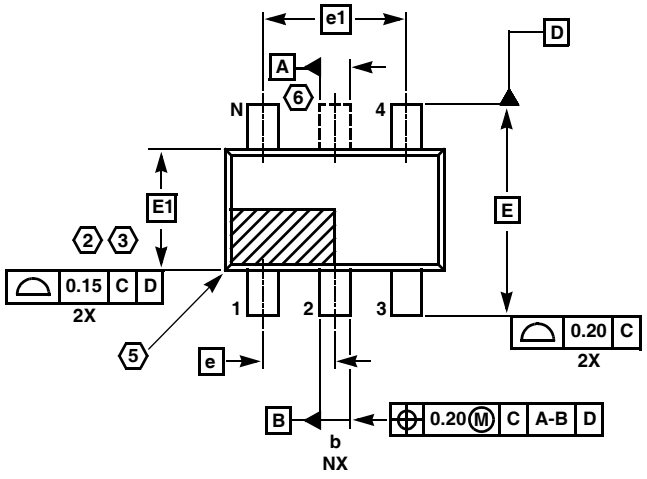

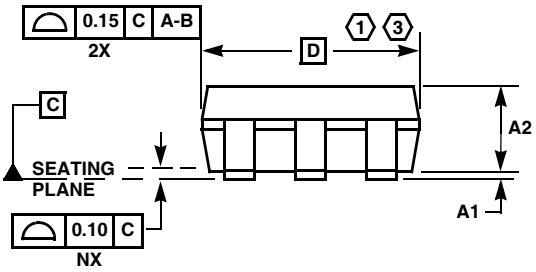

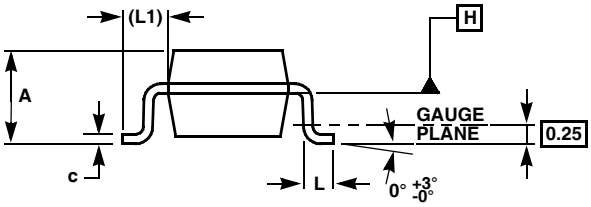

MDP0038

SOT-23 PACKAGE FAMILY

SYMBOL	MILLIMETERS		TOLERANCE
	SOT23-5	SOT23-6	
A	1.45	1.45	MAX
A1	0.10	0.10	±0.05
A2	1.14	1.14	±0.15
b	0.40	0.40	±0.05
c	0.14	0.14	±0.06
D	2.90	2.90	Basic
E	2.80	2.80	Basic
E1	1.60	1.60	Basic
e	0.95	0.95	Basic
e1	1.90	1.90	Basic
L	0.45	0.45	±0.10
L1	0.60	0.60	Reference
N	5	6	Reference

Rev. F 2/07

NOTES:

1. Plastic or metal protrusions of 0.25mm maximum per side are not included.
2. Plastic interlead protrusions of 0.25mm maximum per side are not included.
3. This dimension is measured at Datum Plane “H”.
4. Dimensioning and tolerancing per ASME Y14.5M-1994.
5. Index area - Pin #1 I.D. will be located within the indicated zone (SOT23-6 only).
6. SOT23-5 version has no center lead (shown as a dashed line).

Mini SO Package Family (MSOP)

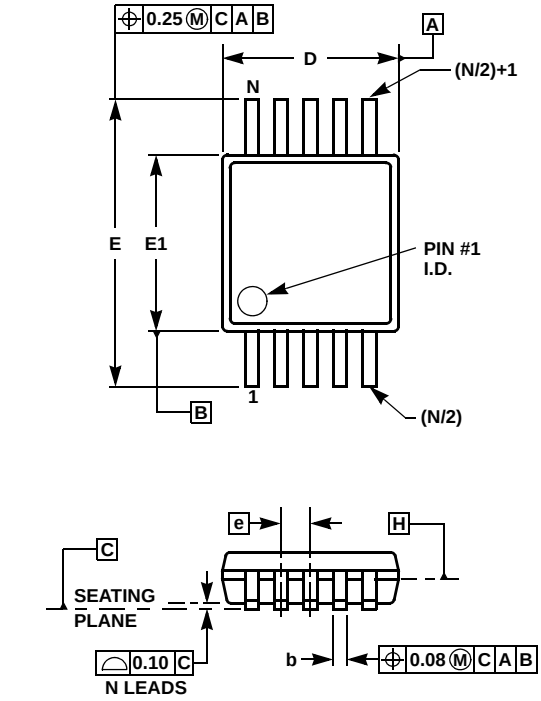

MDP0043

MINI SO PACKAGE FAMILY

SYMBOL	MILLIMETERS		TOLERANCE	NOTES
	MSOP8	MSOP10		
A	1.10	1.10	Max.	-
A1	0.10	0.10	±0.05	-
A2	0.86	0.86	±0.09	-
b	0.33	0.23	+0.07/-0.08	-
c	0.18	0.18	±0.05	-
D	3.00	3.00	±0.10	1, 3
E	4.90	4.90	±0.15	-
E1	3.00	3.00	±0.10	2, 3
e	0.65	0.50	Basic	-
L	0.55	0.55	±0.15	-
L1	0.95	0.95	Basic	-
N	8	10	Reference	-

Rev. D 2/07

NOTES:

1. Plastic or metal protrusions of 0.15mm maximum per side are not included.
2. Plastic interlead protrusions of 0.25mm maximum per side are not included.
3. Dimensions “D” and “E1” are measured at Datum Plane “H”.
4. Dimensioning and tolerancing per ASME Y14.5M-1994.

Small Outline Transistor Plastic Packages (SC70-5)

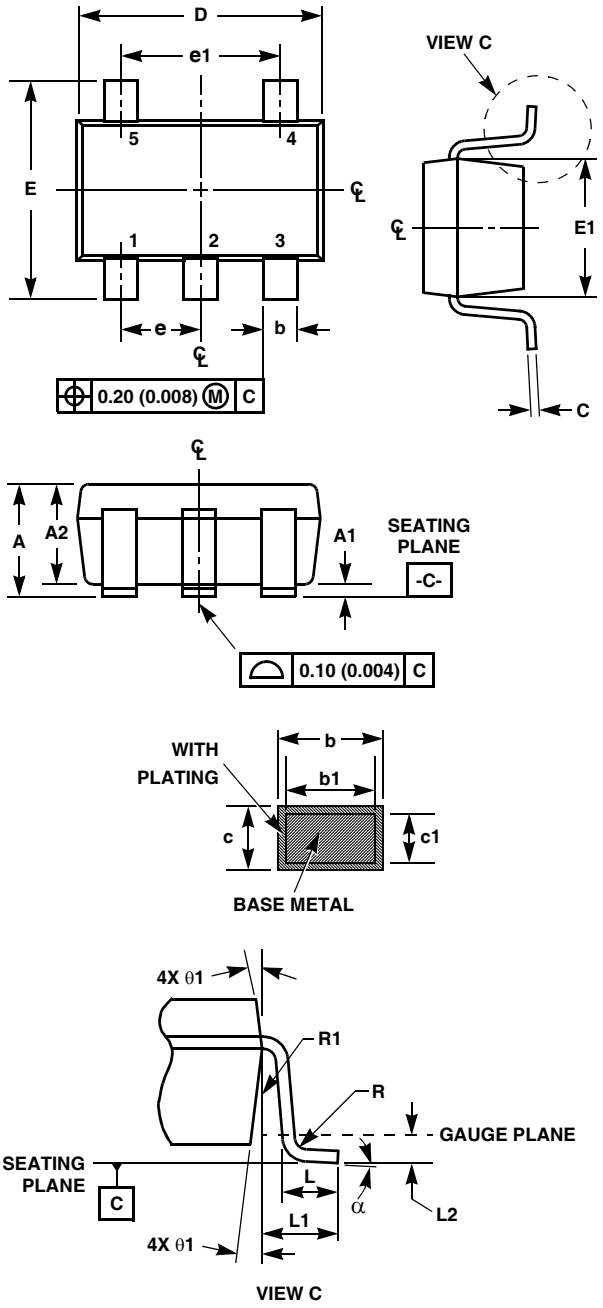

P5.049

5 LEAD SMALL OUTLINE TRANSISTOR PLASTIC PACKAGE

SYMBOL	INCHES		MILLIMETERS		NOTES
	MIN	MAX	MIN	MAX	
A	0.031	0.043	0.80	1.10	-
A1	0.000	0.004	0.00	0.10	-
A2	0.031	0.039	0.80	1.00	-
b	0.006	0.012	0.15	0.30	-
b1	0.006	0.010	0.15	0.25	
c	0.003	0.009	0.08	0.22	6
c1	0.003	0.009	0.08	0.20	6
D	0.073	0.085	1.85	2.15	3
E	0.071	0.094	1.80	2.40	-
E1	0.045	0.053	1.15	1.35	3
e	0.0256 Ref		0.65 Ref		-
e1	0.0512 Ref		1.30 Ref		-
L	0.010	0.018	0.26	0.46	4
L1	0.017 Ref.		0.420 Ref.		-
L2	0.006 BSC		0.15 BSC		
α	0°	8°	0°	8°	-
N	5		5		5
R	0.004	-	0.10	-	
R1	0.004	0.010	0.15	0.25	

Rev. 2 9/03

NOTES:

1. Dimensioning and tolerances per ASME Y14.5M-1994.
2. Package conforms to EIAJ SC70 and JEDEC MO-203AA.
3. Dimensions D and E1 are exclusive of mold flash, protrusions, or gate burrs.
4. Footlength L measured at reference to gauge plane.
5. “N” is the number of terminal positions.
6. These Dimensions apply to the flat section of the lead between 0.08mm and 0.15mm from the lead tip.
7. Controlling dimension: MILLIMETER. Converted inch dimensions are for reference only.

Quarter Size Outline Plastic Packages Family (QSOP)

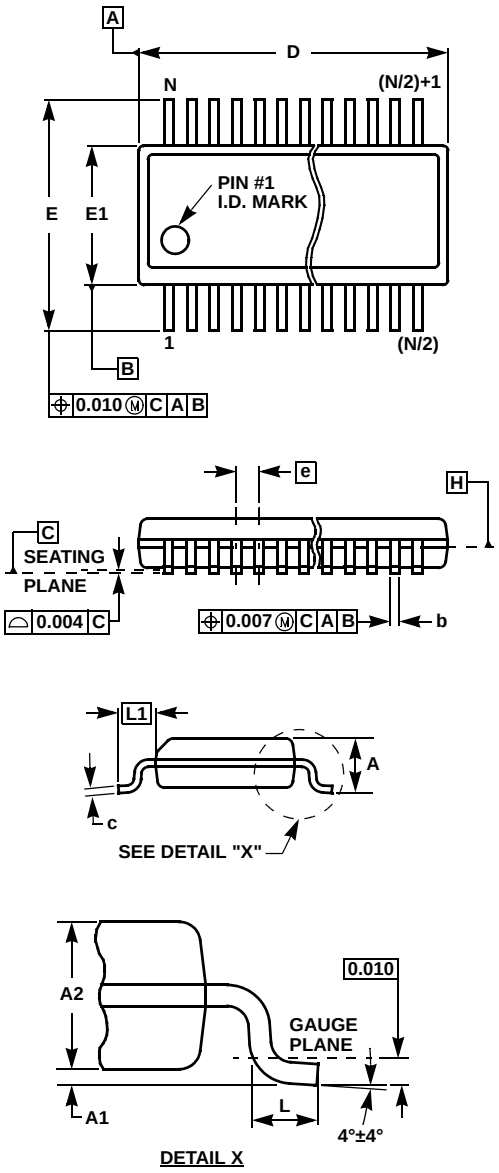

MDP0040

QUARTER SIZE OUTLINE PLASTIC PACKAGES FAMILY

SYMBOL	INCHES			TOLERANCE	NOTES
	QSOP16	QSOP24	QSOP28		
A	0.068	0.068	0.068	Max.	-
A1	0.006	0.006	0.006	±0.002	-
A2	0.056	0.056	0.056	±0.004	-
b	0.010	0.010	0.010	±0.002	-
c	0.008	0.008	0.008	±0.001	-
D	0.193	0.341	0.390	±0.004	1, 3
E	0.236	0.236	0.236	±0.008	-
E1	0.154	0.154	0.154	±0.004	2, 3
e	0.025	0.025	0.025	Basic	-
L	0.025	0.025	0.025	±0.009	-
L1	0.041	0.041	0.041	Basic	-
N	16	24	28	Reference	-

Rev. F 2/07

NOTES:

1. Plastic or metal protrusions of 0.006” maximum per side are not included.
2. Plastic interlead protrusions of 0.010” maximum per side are not included.
3. Dimensions “D” and “E1” are measured at Datum Plane “H”.
4. Dimensioning and tolerancing per ASME Y14.5M-1994.

All Intersil U.S. products are manufactured, assembled and tested utilizing ISO9000 quality systems.
Intersil Corporation’s quality certifications can be viewed at www.intersil.com/design/quality

Intersil products are sold by description only. Intersil Corporation reserves the right to make changes in circuit design, software and/or specifications at any time without notice. Accordingly, the reader is cautioned to verify that data sheets are current before placing orders. Information furnished by Intersil is believed to be accurate and reliable. However, no responsibility is assumed by Intersil or its subsidiaries for its use; nor for any infringements of patents or other rights of third parties which may result from its use. No license is granted by implication or otherwise under any patent or patent rights of Intersil or its subsidiaries.

For information regarding Intersil Corporation and its products, see www.intersil.com