Medium Power Differential Line Driver

élantec

The EL1509 is a dual operational amplifier designed for customer premise line driving in DMT ADSL solutions. This device features a high drive capability of 250mA while consuming only 7.1mA of supply current per amplifier and operating from a single 5V to 12V supply. This driver achieves a typical distortion of less than -85dBc, at 150kHz into a 25Ω load. The EL1509 is available in the industry standard 8-pin SO as well as the thermally-enhanced 8-pin DFN package. Both are specified for operation over the full -40°C to +85°C temperature range.

The EL1509 is ideal for ADSL, SDSL, HDSL2 and VDSL line driving applications.

Ordering Information

PART NUMBER	PACKAGE	TAPE & REEL	PKG. DWG. #
EL1509CS	8-Pin SO	-	MDP0027
EL1509CS-T7	8-Pin SO	7”	MDP0027
EL1509CS-T13	8-Pin SO	13"	MDP0027
EL1509CSZ (See Note)	8-Pin SO (Pb-free)	-	MDP0027
EL1509CSZ-T7 (See Note)	8-Pin SO (Pb-free)	7”	MDP0027
EL1509CSZ-T13 (See Note)	8-Pin SO (Pb-free)	13"	MDP0027
EL1509CL	8-Pin DFN	-	MDP0047
EL1509CL-T7	8-Pin DFN	7"	MDP0047
EL1509CL-T13	8-Pin DFN	13"	MDP0047

NOTE: Intersil Pb-free products employ special Pb-free material sets; molding compounds/die attach materials and 100% matte tin plate termination finish, which is compatible with both SnPb and Pb-free soldering operations. Intersil Pb-free products are MSL classified at Pb-free peak reflow temperatures that meet or exceed the Pb-free requirements of IPC/JEDEC J Std-020B.

Get FULL DATASHEET

Features

- Drives up to 250mA from a +12V supply
- $20V_{P-P}$ differential output drive into 100Ω
- -85dBc typical driver output distortion at full output at 150kHz
- Low quiescent current of 7.5mA per amplifier
- Pb-free available

Applications

- ADSL G.lite CO line driving
- ADSL full rate CPE line driving
- G.SHDSL, HDSL2 line driver
- Video distribution amplifier
- Video twisted-pair line driver

Pinouts

EL1509
(8-PIN SO)
TOP VIEW

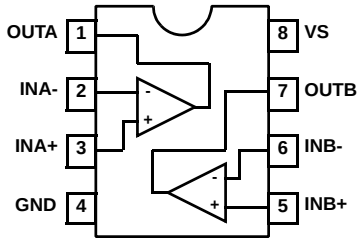

EL1509
(8-PIN DFN)
TOP VIEW

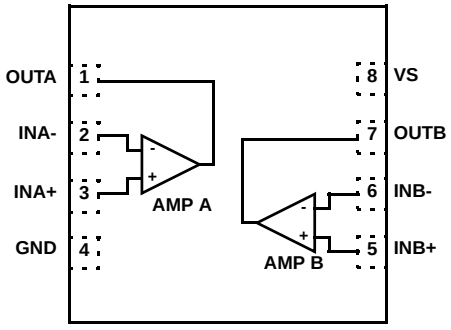

CAUTION: These devices are sensitive to electrostatic discharge; follow proper IC Handling Procedures.
1-888-INTERSIL or 321-724-7143 | Intersil (and design) is a registered trademark of Intersil Americas Inc.
Copyright © 2001Elantec Semiconductor, Inc. 2002-2004 Intersil Americas Inc. All Rights Reserved. Elantec is a registered trademark of Elantec Semiconductor, Inc.
All other trademarks mentioned are the property of their respective owners.

All Intersil U.S. products are manufactured, assembled and tested utilizing ISO9000 quality systems.
Intersil Corporation's quality certifications can be viewed at www.intersil.com/design/quality

Intersil products are sold by description only. Intersil Corporation reserves the right to make changes in circuit design, software and/or specifications at any time without notice. Accordingly, the reader is cautioned to verify that data sheets are current before placing orders. Information furnished by Intersil is believed to be accurate and reliable. However, no responsibility is assumed by Intersil or its subsidiaries for its use; nor for any infringements of patents or other rights of third parties which may result from its use. No license is granted by implication or otherwise under any patent or patent rights of Intersil or its subsidiaries.

For information regarding Intersil Corporation and its products, see www.intersil.com