MULTI-COLOR TYPE LED

Features

- High intensity
- Wide viewing angle
- General purpose leads
- Reliable and rugged

Package Dimensions

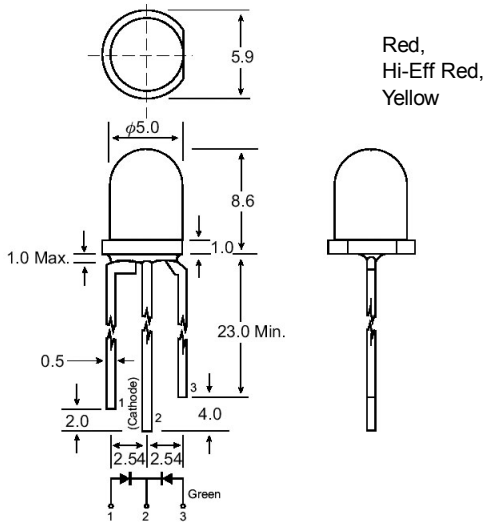

Unit: mm (inches)

Tolerance: ± 0.25mm (.010") max.

Absolute Maximum Ratings at Ta=25℃

Parameter	Max.	Unit
Power Dissipation	100	mW
Peak Forward Current (1/10 Duty Cycle, 0.1ms Pulse Width)	100	mA
Continuous Forward Current	40	mA
Derating Linear From 50℃	0.4	mA / ℃
Reverse Voltage	5	V
Operating Temperature Range	-40℃ to +80℃	
Storage Temperature Range	-40℃ to +80℃	
Lead Soldering Temperature [4mm(.157") From Body]	260℃ for 5 Seconds	

Notes:

1. All dimensions are in millimeters (inches).
2. Protruded resin under flange is 1.0mm (.04") max.
3. Lead spacing is measured where the leads emerge from the package.
4. Specifications are subject to change without notice.

Part No.	Emitting Color	Lens Color	Peak Wavelength λp (nm)	Vf (V) I_f = 20mA (Note E1)		Iv (mcd) (Note E2)		Viewing Angle $2\theta_{1/2}$ (Deg) (Note E3)
				Min	Typ	Min	Typ	
EL-5RG432	Hi-Red	Water Clear	656	1.6	1.9	60	85	40
	Hi-Green		564	1.7	2.2	30	55	40
EL-5RG634	Hi-Red	White Diffused	630	1.6	2.0	20	50	60
	Hi- Green		568	1.7	2.2	15	35	60
EL-5YG644	Super-Yellow	White Diffused	590	1.7	2.1	80	100	60
	Super-Green		570	1.7	2.2	55	70	60
EL-5RG452	Ultra-Red	Water Clear	636	1.6	2.05	800	1200	40
	Ultra-Green		568	1.7	2.2	450	750	40

Parameter	Test Condition
Luminous Intensity	I_f = 20mA (Note E1. Luminous intensity is measured with a light sensor and filter combination that approximates the CIE eye-response curve.)
Dominant Wavelength	I_f = 20mA (Note E2: The dominant wavelength (λd) is derived from the CIE chromaticity diagram and represents the single wavelength which defines the color of the device.)
Peak Emission Wavelength	I_f = 20mA
Viewing Angle	(Note E3. $\theta_{1/2}$ is the off-axis angle at which the luminous intensity is half the axial luminous intensity.)
Spectral Line Half-Width	I_f = 20mA
Forward Voltage	I_f = 20mA
Reverse Current	I_f = 20mA

Elite Enterprises (H.K.) Co., Ltd.
Flat 2505, 25/F., Nanyang Plaza, 57 Hung To Road, Kwun Tong, H.K.
Tel: (852) 2723-3122 Fax: (852) 2723-3990 Email: info@elite-ent.com.hk