EVERLIGHT ELECTRONICS CO.,LTD.

Technical Data Sheet
High Power LED – 1W

EHP-AX08LS/LM01-P01

Features



- Feature of the device: small package with high efficiency
- Typical color temperature: 3500 K.
- Typical view angle: 120°.
- Typical light flux output: 42lm @ 350mA.
- ESD protection.
- Soldering methods: SMT.
- Grouping parameter: total luminous flux, color temperature.
- Typical optical efficiency: 34 lm/W.
- Thermal resistance (junction to lead): 15 K/W.
- The product itself will remain within RoHS compliant version

Applications

- TFT LCD display backlight
- Decorative and entertainment illumination
- Signal and symbol luminaries for orientation marker lights (e.g. steps, exit ways, etc.)
- Exterior and interior automotive illumination

Materials

Items	Description
Housing black body	**Heat resistant polymer**
Encapsulating Resin	**Silicone resin**
Lens	**Silicone**
Electrodes	**Ag plating copper alloy**
Die attach	**Silver paste**
Chip	**InGaN**

EHP-AX08LS/LM01-P01

Dimensions

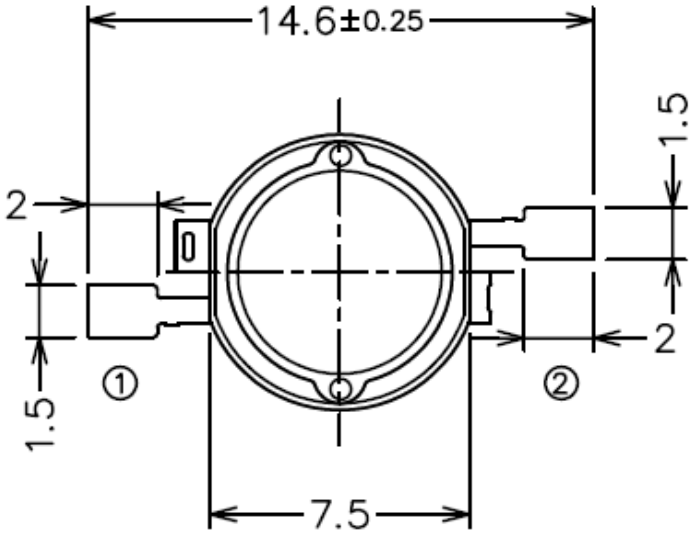

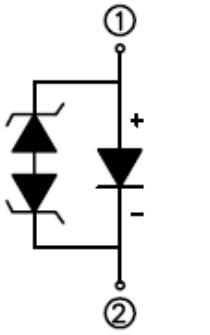

Polarity

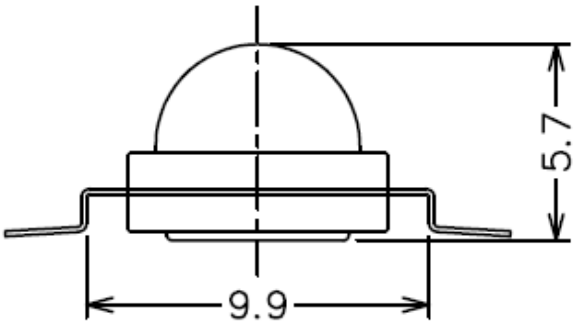

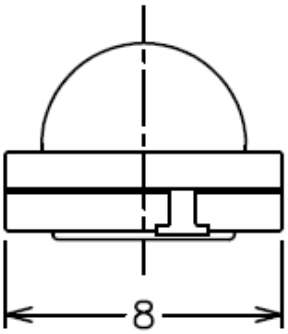

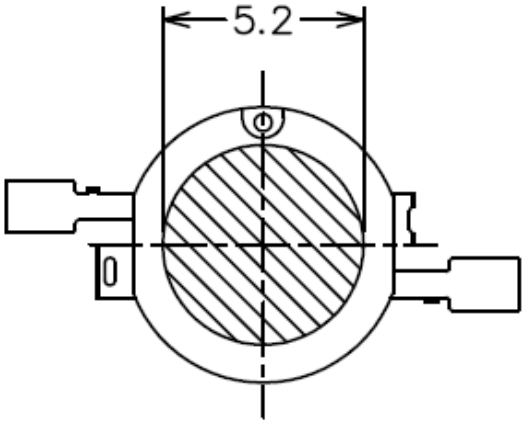

Bot. view

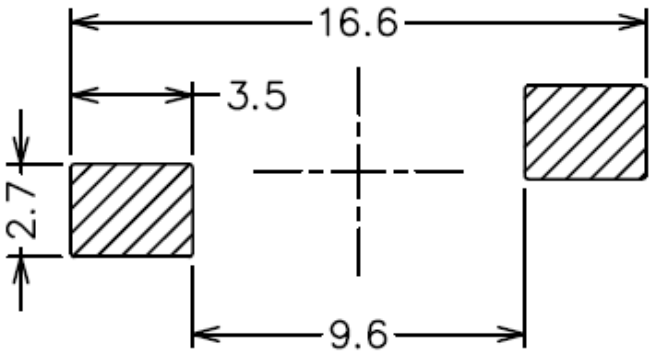

Soldering patterns

Notes: 1. Dimensions are in millimeters.

2. Tolerances unless dimensions ±0.25mm.

EHP-AX08LS/LM01-P01

Maximum Ratings ($T_{Ambient}$=25ºC)

Parameter	Symbol	Rating	Unit
Operating Temperature	T_{opr}	-40 ~ +100	ºC
Storage Temperature	T_{stg}	-40 ~ +110	ºC
Junction temperature	T_j	125	ºC
Pulse Forward Current	I_F	500	mA
Power Dissipation	P_d	2.0	W
Junction to heat-sink thermal resistance	R_{th}	15	K/W

Electro-Optical Characteristics ($T_{Ambient}$=25ºC)

Parameter	Bin	Symbol	Min	Typ.	Max	Unit	Condition
Luminous Flux(1)	J3	Φ_v	33	----	39	lm	I_F=350mA
	J4		39	----	45		
	J5		45	----	52		
Forward Voltage(2)	V2	V_F	3.25	----	3.55	V	
	V3		3.55	----	3.85		
	V4		3.85	----	4.15		
Viewing Angle(3)	----	$2\theta_{1/2}$	----	120	----	deg	
Color Temperature(4)	----	CCT	2670	3500	4500	K	

Note. 1. Luminous Flux measurement tolerance: ±10%

2. Forward Voltage measurement tolerance: ±0.1V

3. $2\theta_{1/2}$ is the off axis angle from lamp centerline where the luminous intensity is 1/2 of the peak value.

4. X, Y coordination for white light bin areas refer to EHP-A08-AX08 series White and Warm White Binning (DSE-A08-001) .

EHP-AX08LS/LM01-P01

Typical Electro-Optical Characteristics Curves

Relative Spectral Distribution, I_F=350mA, $T_{Ambient}$=25ºC

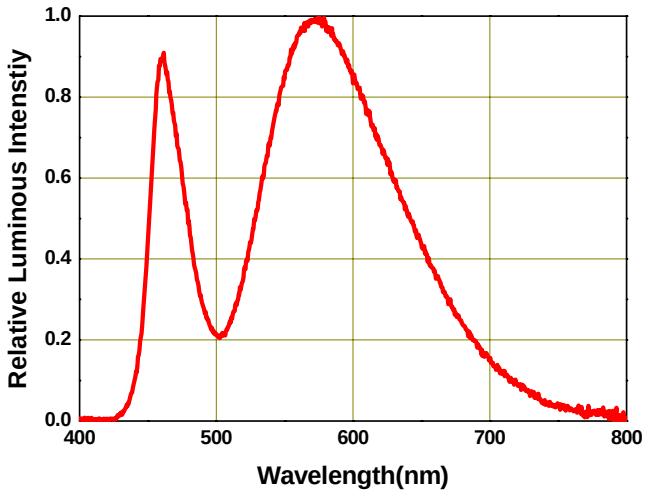

Forward Voltage vs Forward Current, $T_{Ambient}$=25ºC

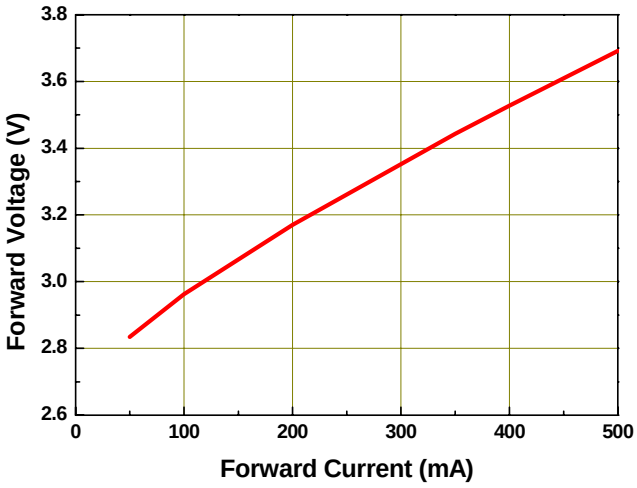

Relative Luminous Intensity vs Forward Current, $T_{Ambient}$=25ºC

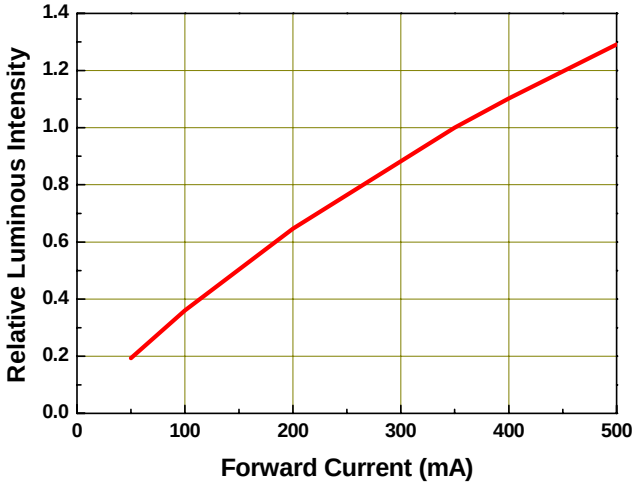

Forward Current Derating Curve, Derating based on T_{jMAX}=125°C

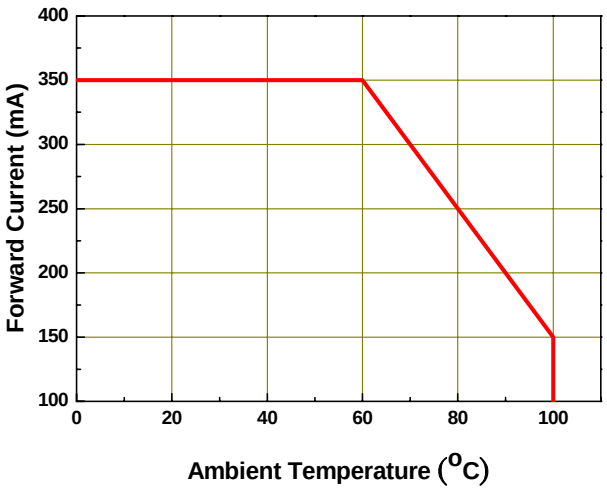

EHP-AX08LS/LM01-P01

Typical Representative Spatial Radiation Pattern

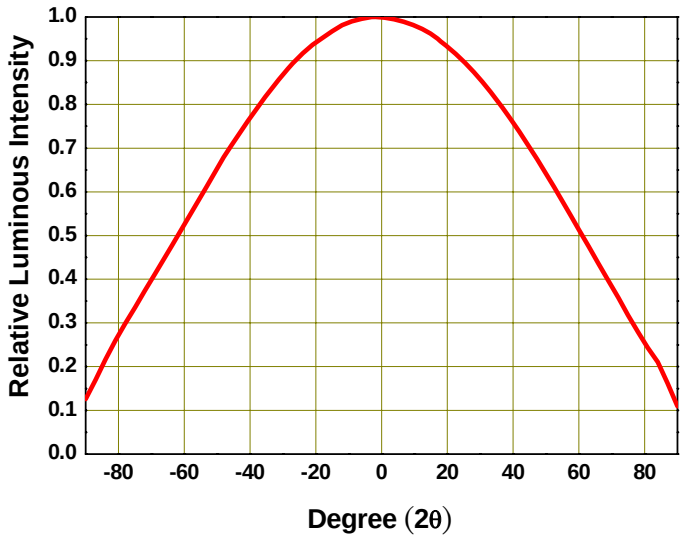

EHP-AX08LS/LM01-P01

Label explanation

CPN: Customer's Production Number

P/N : Production Number

QTY: Packing Quantity

CAT: Ranks

HUE: Dominant Wavelength

REF: Reference

LOT No: Lot Number

MADE IN TAIWAN: Production Place



Tube Packing Specifications

1. Tube

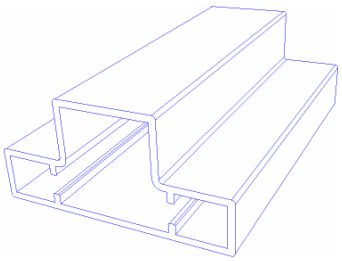

2. Inner Carton

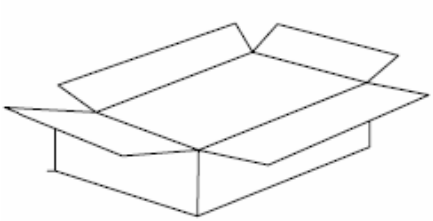

3. Outside Carton

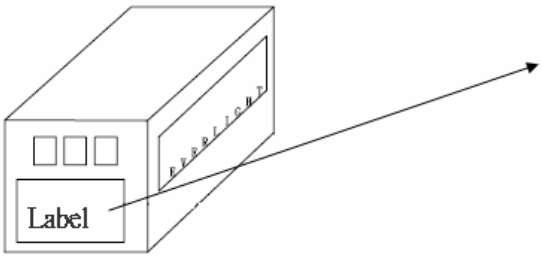



- **Packing Quantity**
  1. **60 Pcs / Per Tube**
  2. **20 Tubes / Inner Carton**
  3. **12 Inner Cartons / Outside Carton**

EHP-AX08LS/LM01-P01

Reliability Test Items and Results

Stress Test	Stress Condition	Stress Duration
Solderability	Tsol=230℃, 5sec	1 times
Reflow	Tsol=260℃, 10sec, 6min	3 times
Thermal Shock	H：＋110℃ 20min. '∫ 10sec. 'L：－ 40℃ 20min.	500 Cycles
Temperature Cycle	H：＋100℃ 30min. '∫ 5min. 'L：－ 40℃ 30min.	1000 Cycles
High Temperature/Humidity Reverse Bias	Ta=85℃ , RH=85%	1000hours
High Temperature/Humidity Operation	Ta=85℃ , RH=60%, IF=225mA	1000hours
High Temperature Storage	Ta=110℃	1000hours
Low Temperature Storage	Ta=-40℃	1000hours
Intermittent operational Life	Ta=25℃, IF=1000mA 30mS on/ 2500mS off	1000hours
High Temperature Operation Life #1	Ta=55℃, IF=350mA	1000hours
High Temperature Operation Life #2	Ta=85℃, IF=225mA	1000hours
High Temperature Operation Life #3	Ta=100℃, IF=150mA	1000hours
Low Temperature Operation Life	Ta=-40℃, IF=350mA	1000hours
Power Temperature Cycle	H：＋85℃ 15min. '∫ 5min. 'L：－ 40℃ 15min. IF=225mA,2min on/off	1000cycles
ESD Human Body Model	2000V, Interval:0.5sec	3 times
ESD Machine Model	200V, Interval:0.5sec	3 times

***Im: BRIGHTNESS ATTENUATE DIFFERENCE(1000hrs)＜50%**

***VF: FORWARD VOLTAGE DIFFERENCE＜20%**

Precautions For Use

1. Over-current-proof

Though EHP-A08 has conducted ESD protection mechanism, customer must not use the device in reverse and should apply resistors for extra protection. Otherwise slight voltage shift may cause enormous current change and burn out failure would happen.

2. Storage

i. Do not open moisture proof bag before the products are ready to use.
ii. Before opening the package, the LEDs should be kept at 30℃ or less and 90%RH or less.
iii. The LEDs should be used within a year.
iv. After opening the package, the LEDs should be kept at 30℃ or less and 70%RH or less.
v. The LEDs should be used within 168 hours (7 days) after opening the package.
vi. If the moisture absorbent material (silicone gel) has faded away or the LEDs have exceeded the storage time, baking treatment should be performed using the following conditions.
vii. Pre-curing treatment : 60±5℃ for 24 hours.

3. Thermal Management

i. For maintaining the high flux output and achieving reliability, EHP-A08 series LED package should be mounted on a metal core printed circuit board (MCPCB) with proper thermal connection to dissipate approximately 1W of thermal energy under 350mA operation.

MCPCB structure



Recommended supplier:
- Kavano Industrial Co., Ltd
- TT Electronics

ii. Special thermal designs are also recommended to take in outer heat sink design, such as FR4 PCB on Aluminum with thermal vias or FPC on Aluminum with thermal conductive adhesive, etc.
iii. Sufficient thermal management must be conducted, or the die junction temperature will be over the limit under large electronic driving and LED lifetime will decrease critically.

4. Soldering Condition

i. Lead reflow soldering temperature profile

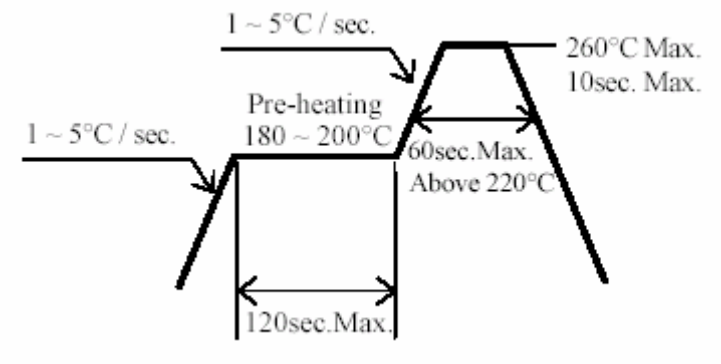

ii. Reflow soldering should not be done more than two times.

iii. While soldering, do not put stress on the LEDs during heating.

iv. After soldering, do not warp the circuit board

5. Soldering Iron

i. For prototype builds or small series production runs it is possible to place and solder the LED by hand.

ii. Dispensing thermal conductive glue or grease on the substrates and follow its curing spec. Press LED housing to closely connect LED and substrate.

iii. It is recommended to hand solder the leads with a solder tip temperature of 280°C for less than 3 seconds within once in less than the soldering iron capacity 25W. Leave two seconds and more intervals, and do soldering of each terminal.

iv. Be careful because the damage of the product is often started at the time of the hand solder.